Hyde Marine

HONEST SOLUTIONS. HONEST EQUIPMENT.

Effective Ballast Water Treatment Solutions

Hyde Marine, Inc.
Ballast Water Treatment

- Hyde Marine BWT System
- SeaKleen®
- Aquionics UV
- Arkal Filters
- Hyde Mud Remover
- New Technical Solutions

Hyde Marine
HONEST SOLUTIONS. HONEST EQUIPMENT

Hyde's Full Scale System Experience

UV Treatment with Cyclonic Separation:

- April 2000 – "Regal Princess" – 200 m3/hr
- Aug. 2001 – "Sea Princess" – 220 m3/hr
- Mar. 2002 – "R. J. Pfeiffer" – 350 m3/hr
- Feb. 2002 – "Star Princess" – 255 m3/hr
- Apr. 2002 – "Stolt Aspiration" – 250m3/hr

UV Treatment with Filtration Pretreatment:

May 2003 – "Coral Princess" – 250m3/hr

Hyde Marine
HONEST SOLUTIONS. HONEST EQUIPMENT

“Regal Princess”

Hyde Marine
HONEST SOLUTIONS. HONEST EQUIPMENT

“Regal Princess”
Hyde BWT System

Hyde Marine
HONEST SOLUTIONS. HONEST EQUIPMENT

HYDE BWT SYSTEM
“Sea Princess”

Hyde Marine
HONEST SOLUTIONS. HONEST EQUIPMENT

Hyde's Testing Experience

- Great Lakes Ballast Technology Demonstration Project Barge Testing
  - **1998 Screen Filtration**
  - **2000 Screen Filtration and Cyclonic Separation with UV**
  - **2001 Arkal Disk Filtration and UV**
- 2000 Full Scale Testing on "Regal Princess"
- 2002 & 2003 Full Scale Testing on Newer Installations
- 2001 "Cape May" Full Scale Testing of UV with Filtration and Seakleen.
- Future Full Scale Test Programs Expected of UV with Filtration and SeaKleen.

Hyde Marine
HONEST SOLUTIONS. HONEST EQUIPMENT

“M/V Algonorth”

Hyde Marine
HONEST SOLUTIONS. HONEST EQUIPMENT

GLBTDP Barge Test 2001

Arkal Filter & U.V.

Hyde Marine

HONEST SOLUTIONS. HONEST EQUIPMENT

Lessons Learned
Shipboard & Barge Testing

- Enhanced Solids Separation (Filtration to 100 microns or less) will improve performance
- Higher Dosage and Improved UV Transmission are required to meet expected standards
- Confirmed Need for UV Treatment both During Ballasting and Deballasting
- Arkal Filter Will Work Reliably and Effectively and will Improve UV Performance

Hyde Marine
HONEST SOLUTIONS. HONEST EQUIPMENT

Aquionics UV
Shipboard Test “Cape May”

Hyde Marine
HONEST SOLUTIONS. HONEST EQUIPMENT

Aquionics Shipboard Test Results

Cape May, Baltimore Harbor

Summer 2001

- Reduced viable zooplankton by 94.4% and 98% after 24 & 48 hours respectively at 200 mJ/cm2
- Phytoplankton growth greatly reduced relative to controls

Hyde Marine

HONEST SOLUTIONS. HONEST EQUIPMENT

Results of Bench Scale UV Testing by U of Washington

Laboratory Evaluations of UV Light for Ballast Water Treatment

By Russell P. Herwig and Jeffery R. Cordell

herwig@u.washington.edu jcordell@u.washington.edu

School of Aquatic and Fishery Sciences

University of Washington

Hyde Marine

HONEST SOLUTIONS. HONEST EQUIPMENT

UV Mesocosm Experimental Design and Results

- Puget Sound seawater amended with zooplankton retrieved from Puget Sound in December 2002
- Amended seawater treated with 100 and 200 mJ cm^{-2} UV light. Treated and control seawater placed in 280 liter (75 gallon) mesocosms (circular fish tanks)
  - Control mesocosms prepared by running amended seawater through same UV reactor, but with the UV lamp off
  - 4 replicates for each experimental treatment and control
- Zooplankton sample collected from mesocosms immediately after UV treatment; 1, 2, and 23 days after treatment.
- Results: Number of live zooplankton continued to decline to a very low level over the 23 day period.

Hyde Marine
HONEST SOLUTIONS. HONEST EQUIPMENT

Mesocosm Results - December 2002
UV Treatment Puget Sound Zooplankton

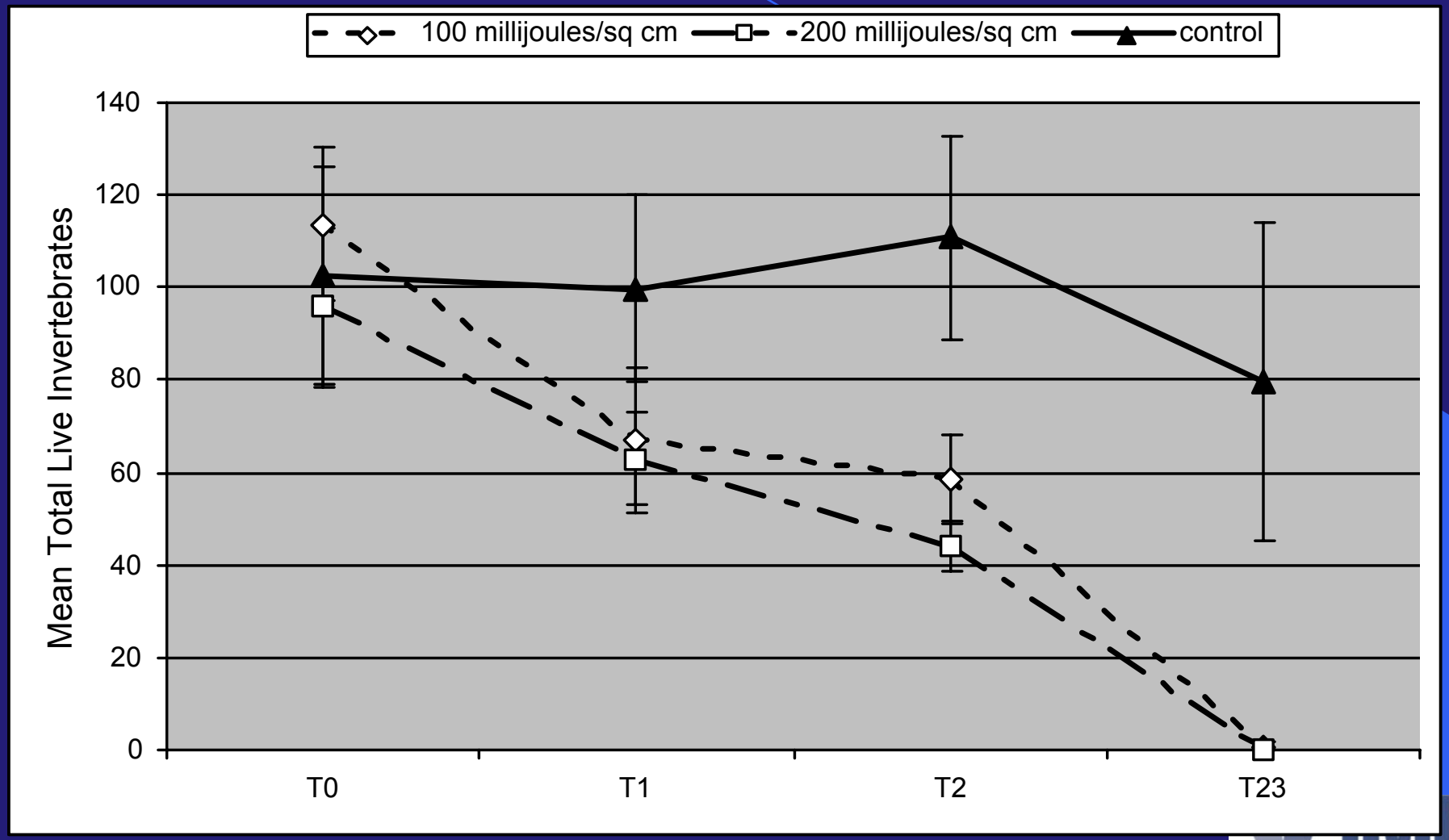

HONEST SOLUTIONS. HONEST EQUIPMENT

Treatment System Requirements

Applies to Any Treatment Technology:

- Maximize killing, inactivation or removal of living organisms from the ballast water.
- Meet demands of the shipboard marine environment.
- Minimize adverse effects on environment.
- Meet the existing safety standards of the marine industry, regulatory bodies and the vessel operating company.

Hyde Marine
HONEST SOLUTIONS. HONEST EQUIPMENT

Additional Requirements

Applies to Any Treatment Technology:

- **Minimize operational changes** to the vessel's existing ballast management processes.
- Fit within the **normal and existing operational procedures** of the shipboard personnel.
- Impose **minimal additional workload** on shipboard personnel.
- **Minimize** extent and **physical impact** of modification to the vessel.
- **Minimize** initial capital as well as life-cycle/ long term operational **costs**.

Hyde Marine
HONEST SOLUTIONS. HONEST EQUIPMENT

New Hyde Marine Ballast Water Treatment System

Tested aboard "Cape May" and GLBTDP barge and installed aboard "Coral Princess"

Aquionics Medium Pressure UV
Arkal Disk Filtration

Fully automatic and can be integrated with ship's Machinery Monitoring and Control system

Hyde Marine

HONEST SOLUTIONS. HONEST EQUIPMENT

M/S CORAL PRINCESS
Hyde Marine BWT System

Hyde Marine
HONEST SOLUTIONS. HONEST EQUIPMENT

Hyde Marine BWT System

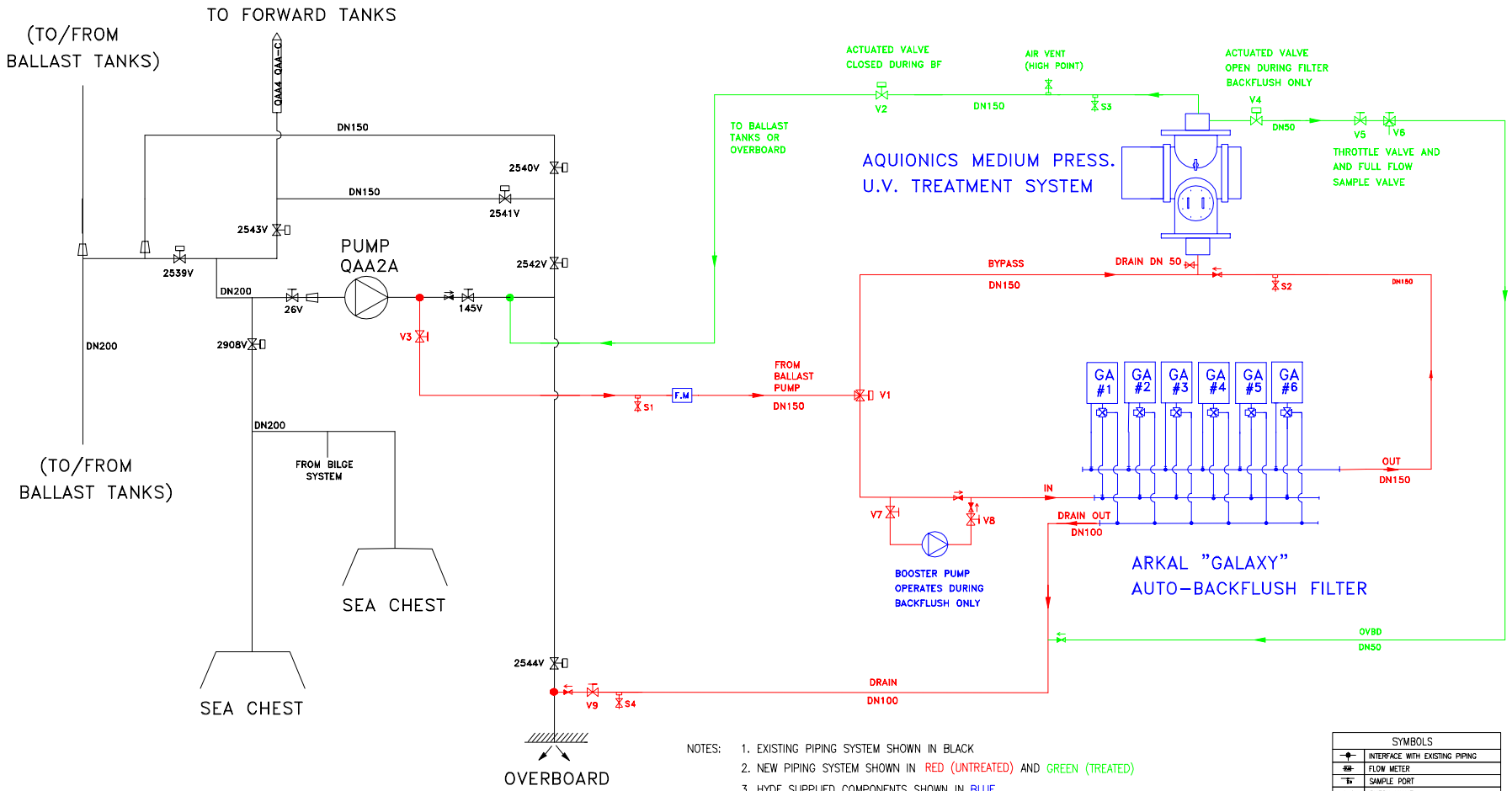

NOTES:

1. EXISTING PIPING SYSTEM SHOWN IN BLACK
2. NEW PIPING SYSTEM SHOWN IN RED (UNTREATED) AND GREEN (TREATED)
3. HYDE SUPPLIED COMPONENTS SHOWN IN BLUE.
4. U.V. SYSTEM: AQUIONICS INLINE 4250 WITH HATCH AND AUTOMATIC WIPER CLEANING SYSTEM
5. FILTRATIONS SYSTEM: ONE "GALAXY-5/6" SPIN KLIN DISK FILTER WITH AUTO-BACKFLUSH

BACKFLUSH BOOSTER PUMP: 60 M3/HR @ 40 MLC

SYMBOLS	
	INTERFACE WITH EXISTING PIPING
	FLOW METER
	SAMPLE PORT
	CHECK VALVE
	MANUAL VALVE
	REMOTE ACTUATED VALVE
	ACTUATED 2-WAY AND 3-WAY VALVE
	PUMP
	FLOW DIRECTION

CORAL PRINCESS UV UNIT

Hyde Marine
HONEST SOLUTIONS. HONEST EQUIPMENT

AQUIONICS INLINE™ UV

Hyde Marine

HONEST SOLUTIONS. HONEST EQUIPMENT

AQUIONCS INLINE UV

- Used Extensively for Shipboard Water Treatment Applications
- Available in Several Standard Sizes
- Medium Pressure – Higher Dosage
- Effective Over Broad UV Transition Range
- High Reliability and Fully Automatic
- Automatic Lamp Cleaning Device and Inspection Hatch

Hyde Marine
HONEST SOLUTIONS. HONEST EQUIPMENT

CORAL PRINCESS
ARKAL Automatic Disk Filter

Hyde Marine
HONEST SOLUTIONS. HONEST EQUIPMENT

ARKAL
Automatic Backflush Grooved Disk Filter

- Used Extensively for Water Treatment Applications incl. Shipboard Graywater
- Available in Several Micron Size Ratings
- High Reliability
- Low Pressure Drop
- Minimum Backflush Volume
- Arkal “Galaxy” Design Reduces Size and Cost

Hyde Marine
HONEST SOLUTIONS. HONEST EQUIPMENT

ARKAL Disk Filter Operation

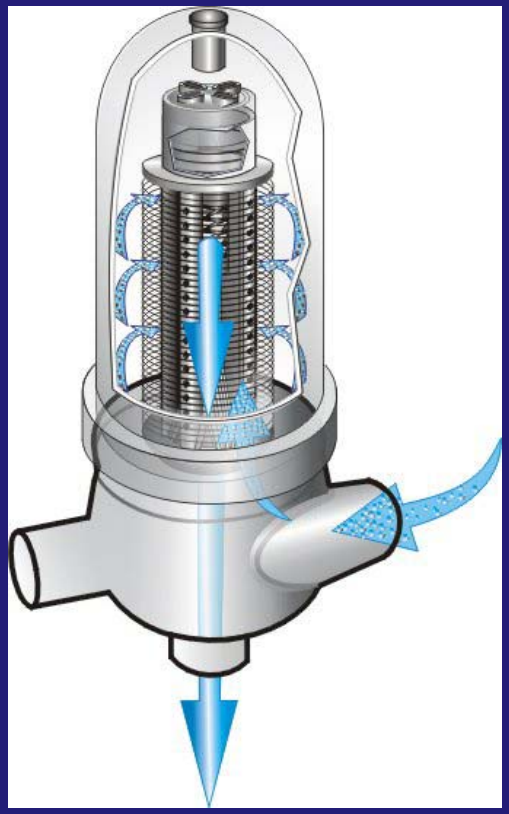

Filtration process

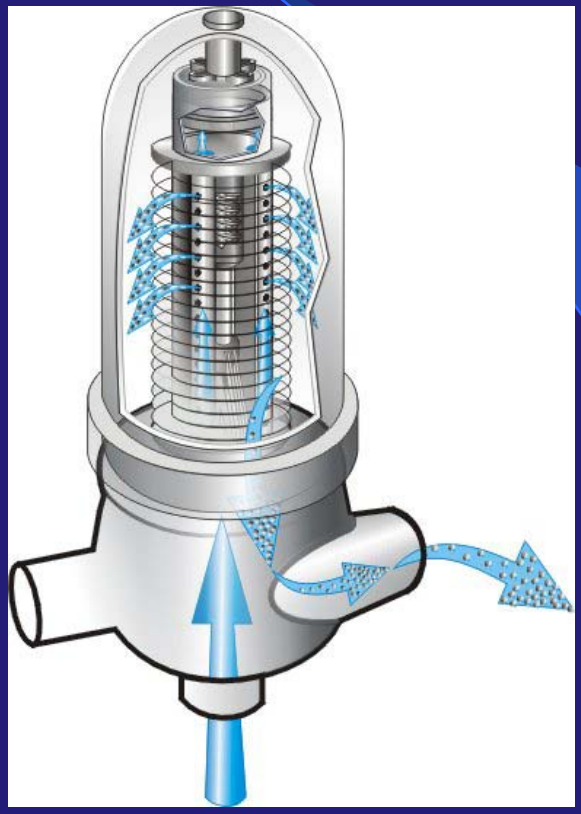

Backflush process

Hyde Marine

HONEST SOLUTIONS. HONEST EQUIPMENT

Hyde Marine - What's Next?

- Continuing Testing and Development of the **Hyde Marine BWT System**
- Adapting New Technologies, such as Med. Press UV & Disk Filtration, to Improve Performance
- Continuing Evaluation and Commercial Introduction of **SeaKleen®**
- Hyde Marine is Committed to Continuous Improvement of Ballast Water Treatment Technologies

Hyde Marine
HONEST SOLUTIONS. HONEST EQUIPMENT