LOON LAKE NET PEN

DIAMOND LAKE NOT PEN

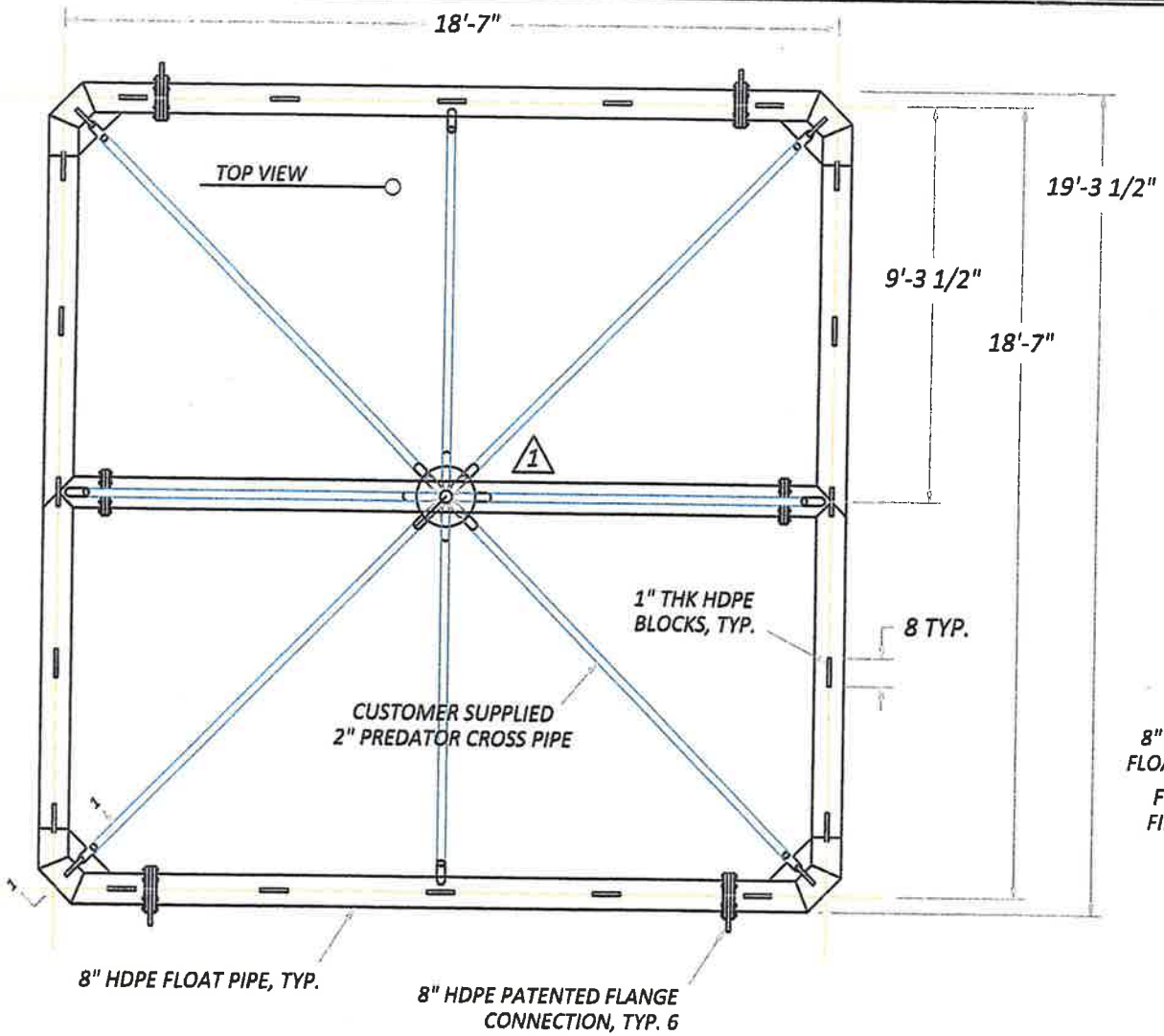

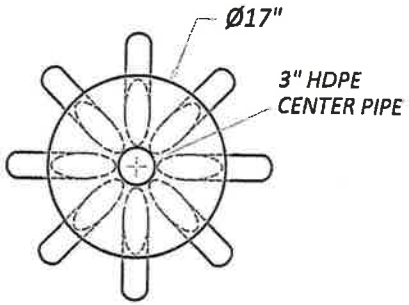

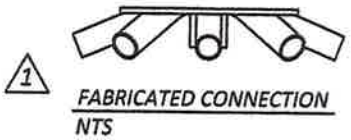

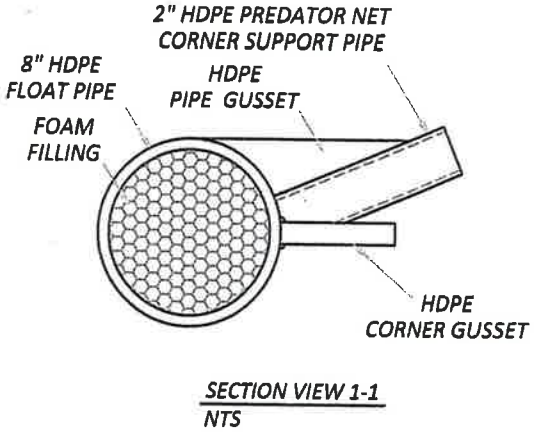

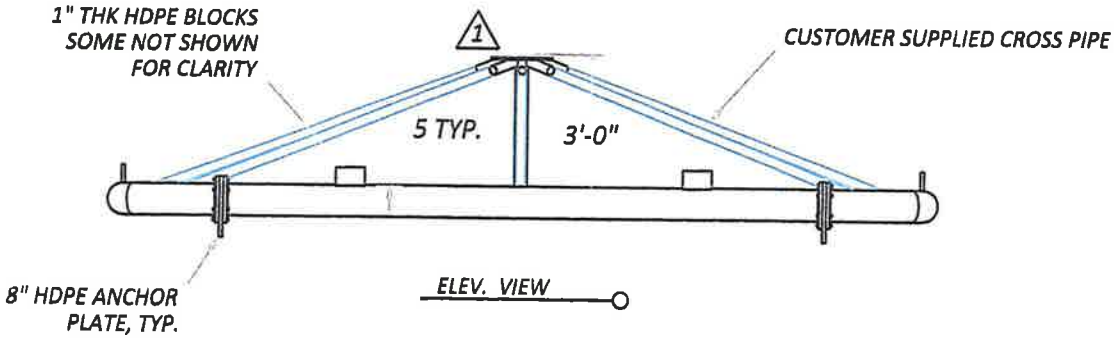

FERGUSON
INDUSTRIAL PLASTICS
740 S.28th Street
Washougal, WA. 98671
WEB: www.HDPE.com
800-634-5082

No.	Date	Revision Description	Dr
1	8/13/09	REV. 2" TOP OUTLET	CN
0	8/11/09	Original Drawing	CN

Sheet Title : HDPE NET PEN

Project: DIAMOND LAKE IMPROVEMENT

REV. No. 1

APPROVED BY:

Scale :	Designed :	Drawn :	Sheet #	Drawing No.
NTS	FIP	CNG		S9.810.2020.1

THIS DRAWING, INFORMATION & SUBJECT MATTER ARE THE CONFIDENTIAL, SOLE & EXCLUSIVE PROPERTY OF THE FIP GROUP & ARE NOT TO BE COPIED OR USED WITHOUT WRITTEN CONSENT.

Carlisle Lake

WAITS LAKE NET PEN

EVERETT NET PEN

Net Pen - Des Moines Marina

Duwamish-Green Chapter of Trout Unlimited

Westport Netpens

NOT ANCHORED TO
FLOATING PLATFORMS