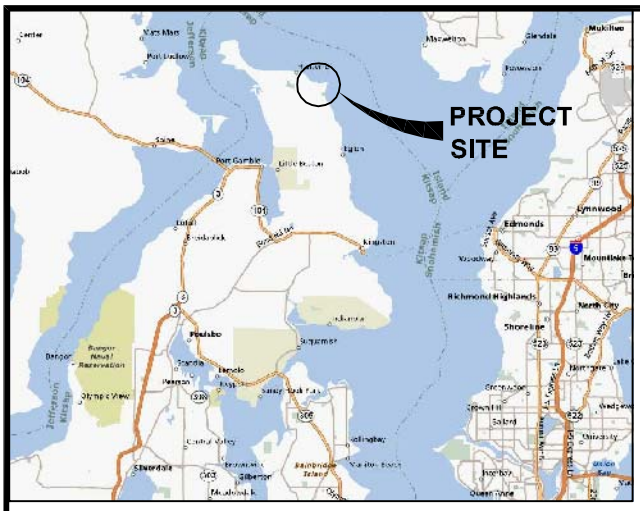

VICINITY MAP

TIDAL INFORMATION

STATION I.D.: 9445526 HANSVILLE, WA.

MEAN HIGHER HIGH WATER (MHHW)	10.43'
MEAN HIGH WATER (MHW)	9.60'
MEAN TIDE LEVEL (MTL)	6.17'
MEAN SEA LEVEL (MSL)	6.05'
MEAN LOW WATER (MLW)	2.77'
MEAN LOWER LOW WATER (MLLW)	0.00
EXTREME LOW WATER (ELW)	−2.95

LATITUDE 49.910666N, LONGITUDE −122.532441W
SECTION 15, TOWNSHIP 28, RANGE 2−E

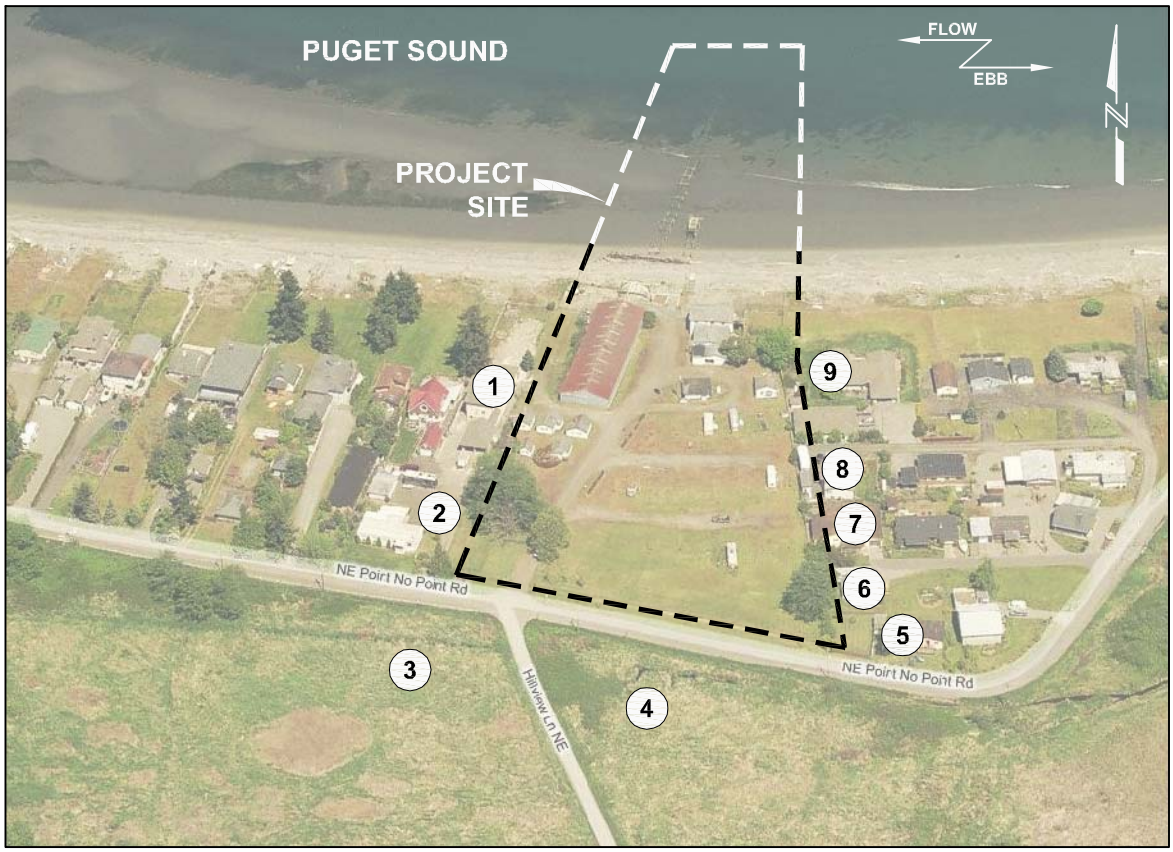

SITE LOCATION

NO SCALE

PURPOSE: RESTORE RECREATIONAL BOAT LAUNCH FUNCTION TO SITE

DATUM: 0.0' MLLW

ADJACENT PROPERTY OWNERS:

1. BULGER
2. SWEENEY
3. KITSAP Co.
4. RUNKLE & MORDAUNT
5. McLEOD
6. RAWSON
7. TROEMEL
8. ULIVILA
9. ROUPE

POINT NO POINT BOAT LAUNCH
8708 POINT NO POINT RD.

VICINITY MAP AND SITE LOCATION AERIAL PHOTO

WA. DEPT. OF FISH & WILDLIFE
600 CAPITOL WAY NORTH
OLYMPIA, WA. 98501−1091

PROPOSED: DEMOLISH EXISTING FACILITY, CONSTRUCT NEW ELEVATED LAUNCH

IN: PUGET SOUND
NEAR: HANSVILLE
COUNTY: KITSAP **STATE:** WA.

APPLICATION BY:
DEPT. OF FISH AND WILDLIFE
UPI No.:

SHEET 1 **of** 8 **DATE:** MAR. 2010

3/30/10
Drawings\2008\084052.01 Point No Point Boat Launch\Jarpa Permit\P−01.dwg

SITE LOCATION

0 20 40 60FT

NOTES:

1. ALL EXISTING STRUCTURES, RAILS AND CONCRETE ON SITE TO BE DEMOLISHED AND REMOVED.
2. ALL EXISTING TIMBER CREOSOTE PILES TO BE DEMOLISHED OR BROKEN BELOW THE MUDLINE AND DEMOLISHED ABOVE.
3. ALL EXISTING UTILITIES TO BE DEMOLISHED AND REMOVED OR CAPPED.
4. ENTIRE SITE IS FEMA FLOOD ZONE AE.

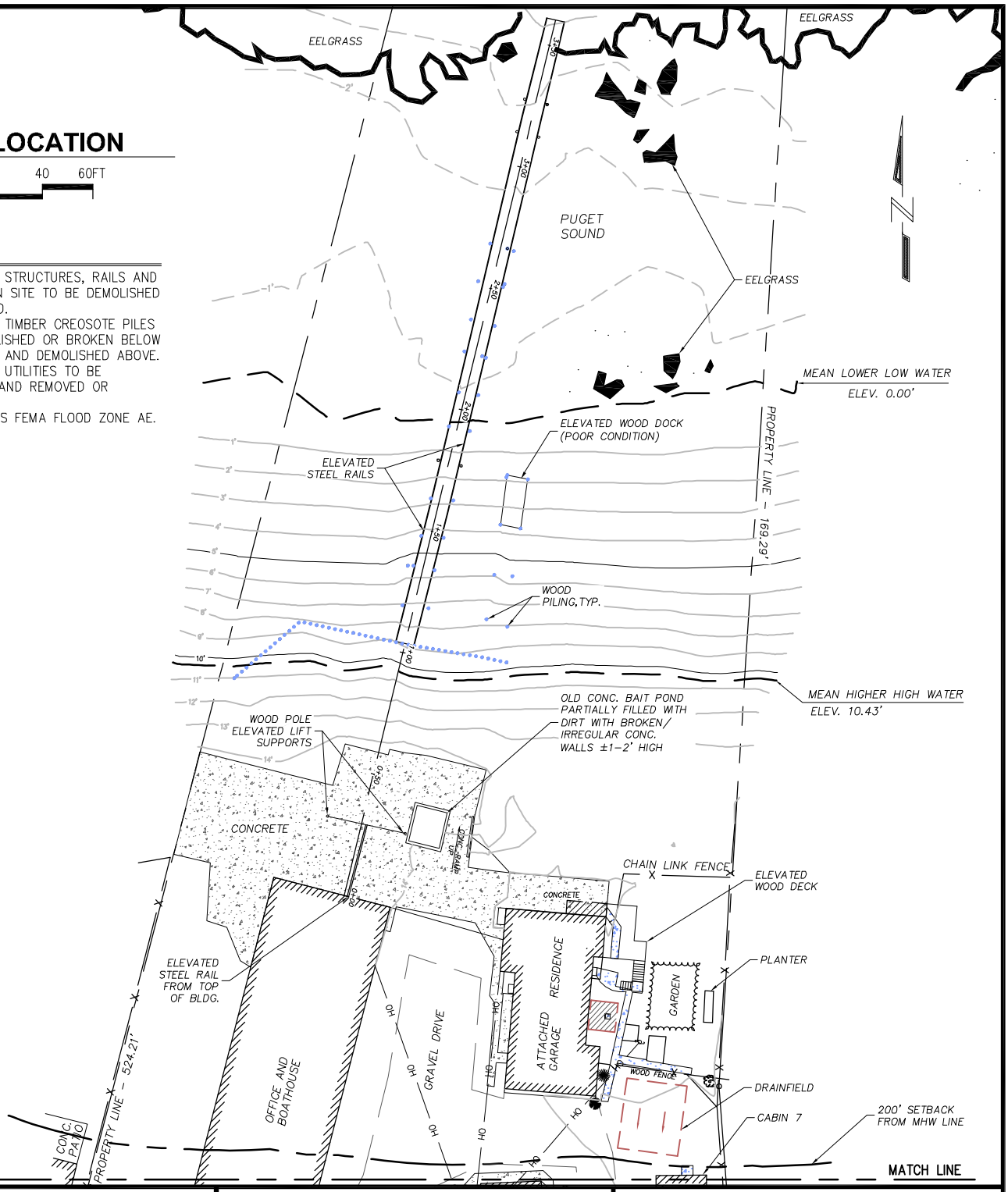

PURPOSE: RESTORE RECREATIONAL BOAT LAUNCH FUNCTION TO SITE

DATUM: 0.0' MLLW

ADJACENT PROPERTY OWNERS:

1. BULGER
2. SWEENEY
3. KITSAP Co.
4. RUNKLE & MORDAUNT
5. McLEOD
6. RAWSON
7. TROEMEL
8. ULIVILA
9. ROUPE

POINT NO POINT BOAT LAUNCH
8708 POINT NO POINT RD.

EXISTING PLAN VIEW NORTH

WA. DEPT. OF FISH & WILDLIFE
600 CAPITOL WAY NORTH
OLYMPIA, WA. 98501-1091

PROPOSED: DEMOLISH EXISTING FACILITY, CONSTRUCT NEW ELEVATED LAUNCH

IN: PUGET SOUND
NEAR: HANSVILLE
COUNTY: KITSAP **STATE:** WA.

APPLICATION BY:
DEPT. OF FISH AND WILDLIFE
UPI No.:

SHEET 2 **of** 8 **DATE:** MAR. 2010

3/30/10
Drawings\2008\084052.01 Point No Point Boat Launch\Jarpa Permit\P-02.dwg

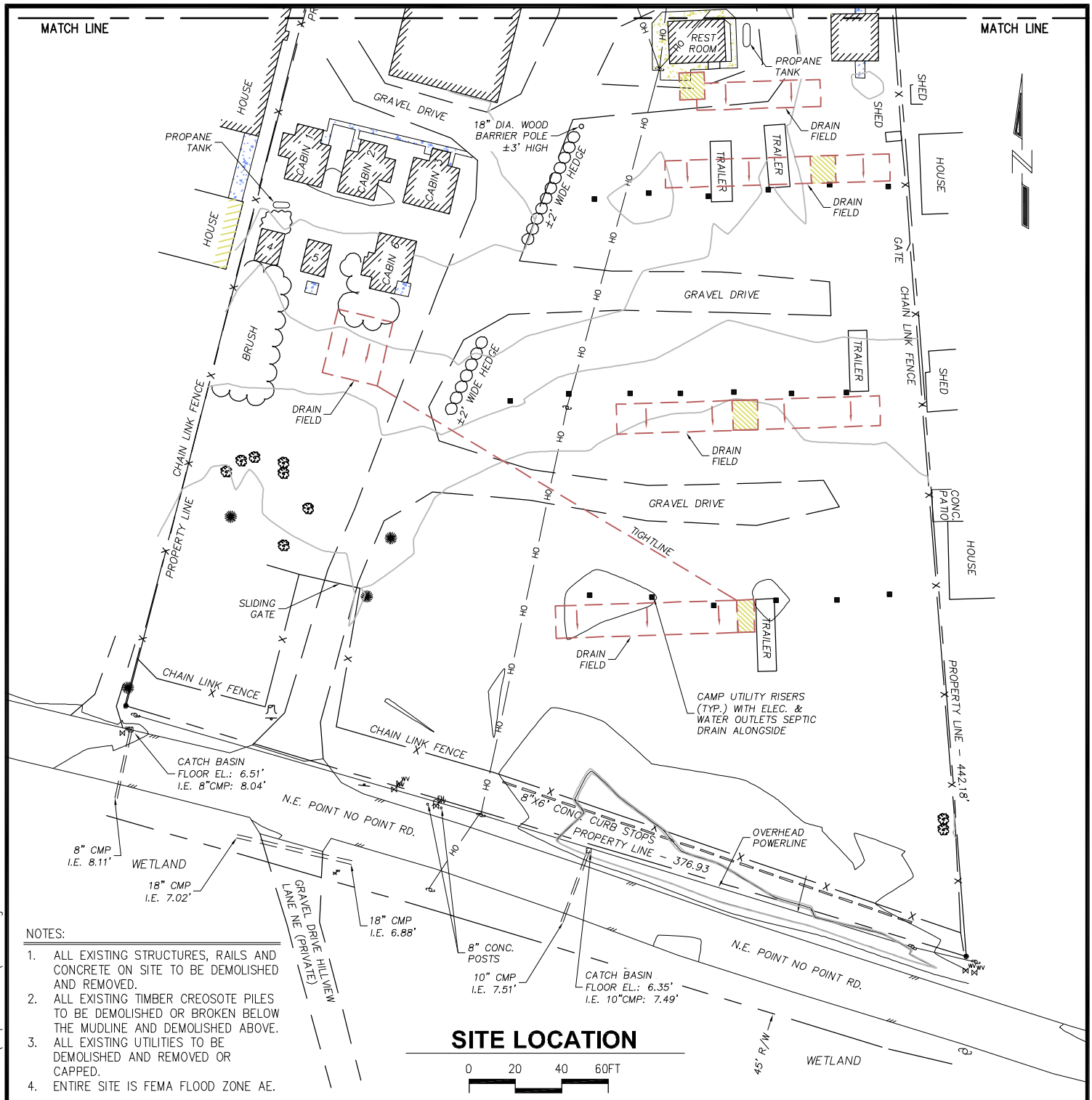

NOTES:

1. ALL EXISTING STRUCTURES, RAILS AND CONCRETE ON SITE TO BE DEMOLISHED AND REMOVED.
2. ALL EXISTING TIMBER CREOSOTE PILES TO BE DEMOLISHED OR BROKEN BELOW THE MUDLINE AND DEMOLISHED ABOVE.
3. ALL EXISTING UTILITIES TO BE DEMOLISHED AND REMOVED OR CAPPED.
4. ENTIRE SITE IS FEMA FLOOD ZONE AE.

PURPOSE: RESTORE RECREATIONAL BOAT LAUNCH FUNCTION TO SITE

DATUM: 0.0' MLLW

ADJACENT PROPERTY OWNERS:

1. BULGER
2. SWEENEY
3. KITSAP Co.
4. RUNKLE & MORDAUNT
5. McLEOD
6. RAWSON
7. TROEMEL
8. ULIVILA
9. ROUPE

POINT NO POINT BOAT LAUNCH
8708 POINT NO POINT RD.

EXISTING PLAN VIEW SOUTH

WA. DEPT. OF FISH & WILDLIFE
600 CAPITOL WAY NORTH
OLYMPIA, WA. 98501-1091

PROPOSED: DEMOLISH EXISTING FACILITY, CONSTRUCT NEW ELEVATED LAUNCH

IN: PUGET SOUND
NEAR: HANSVILLE
COUNTY: KITSAP **STATE:** WA.

APPLICATION BY:
DEPT. OF FISH AND WILDLIFE
UPI No.:

SHEET 3 **of** 8 **DATE:** MAR. 2010

3/29/10
Drawings\2008\084052.01 Point No Point Boat Launch\Jarpa Permit\P-03.dwg

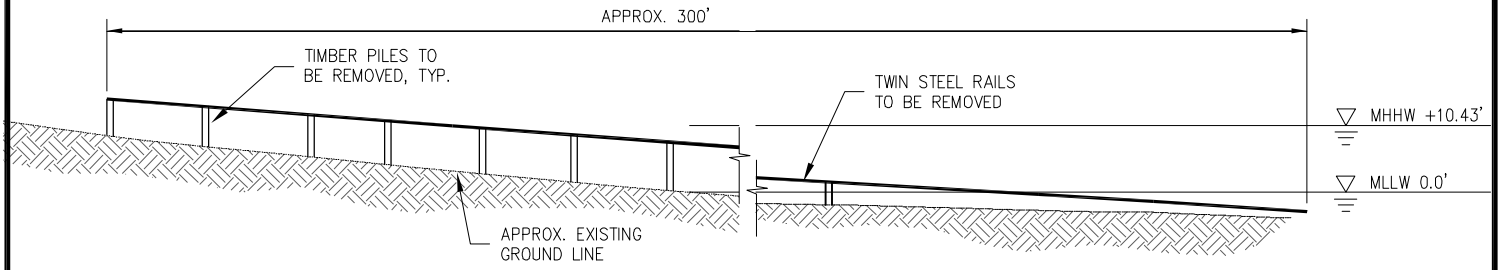

EXISTING STEEL RAIL LAUNCH PROFILE

(TO BE REMOVED IN ITS ENTIRETY)

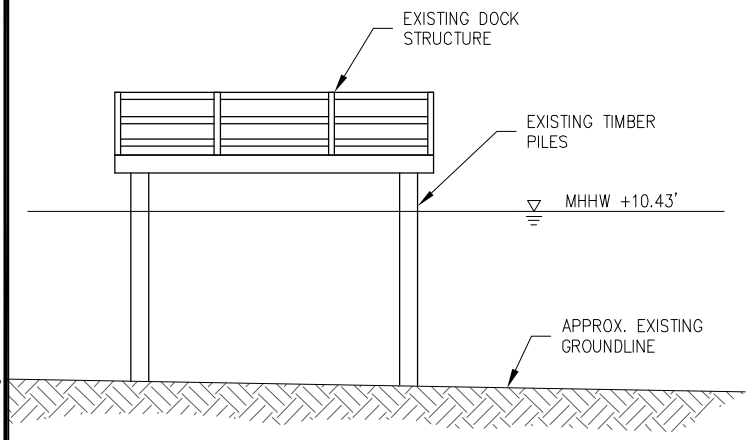

EXISTING WOOD DOCK

(TO BE REMOVED IN ITS ENTIRETY)

NOTE:
TOTAL OF 88 TIMBER CREOSOTE PILES TO BE REMOVED

PURPOSE: RESTORE RECREATIONAL BOAT LAUNCH FUNCTION TO SITE

DATUM: 0.0' MLLW

ADJACENT PROPERTY OWNERS:

1. BULGER
2. SWEENEY
3. KITSAP Co.
4. RUNKLE & MORDAUNT
5. McLEOD
6. RAWSON
7. TROEMEL
8. ULIVILA
9. ROUPE

POINT NO POINT BOAT LAUNCH
8708 POINT NO POINT RD.

EXISTING ELEVATIONS

WA. DEPT. OF FISH & WILDLIFE
600 CAPITOL WAY NORTH
OLYMPIA, WA. 98501-1091

PROPOSED: DEMOLISH EXISTING FACILITY, CONSTRUCT NEW ELEVATED LAUNCH

IN: PUGET SOUND
NEAR: HANSVILLE
COUNTY: KITSAP **STATE:** WA.

APPLICATION BY:
DEPT. OF FISH AND WILDLIFE
UPI No.:

SHEET 4 **of** 8 **DATE:** MAR. 2010

3/29/10
Drawings\2008\084052.01 Point No Point Boat Launch\Jarpa Permit\P-04.dwg

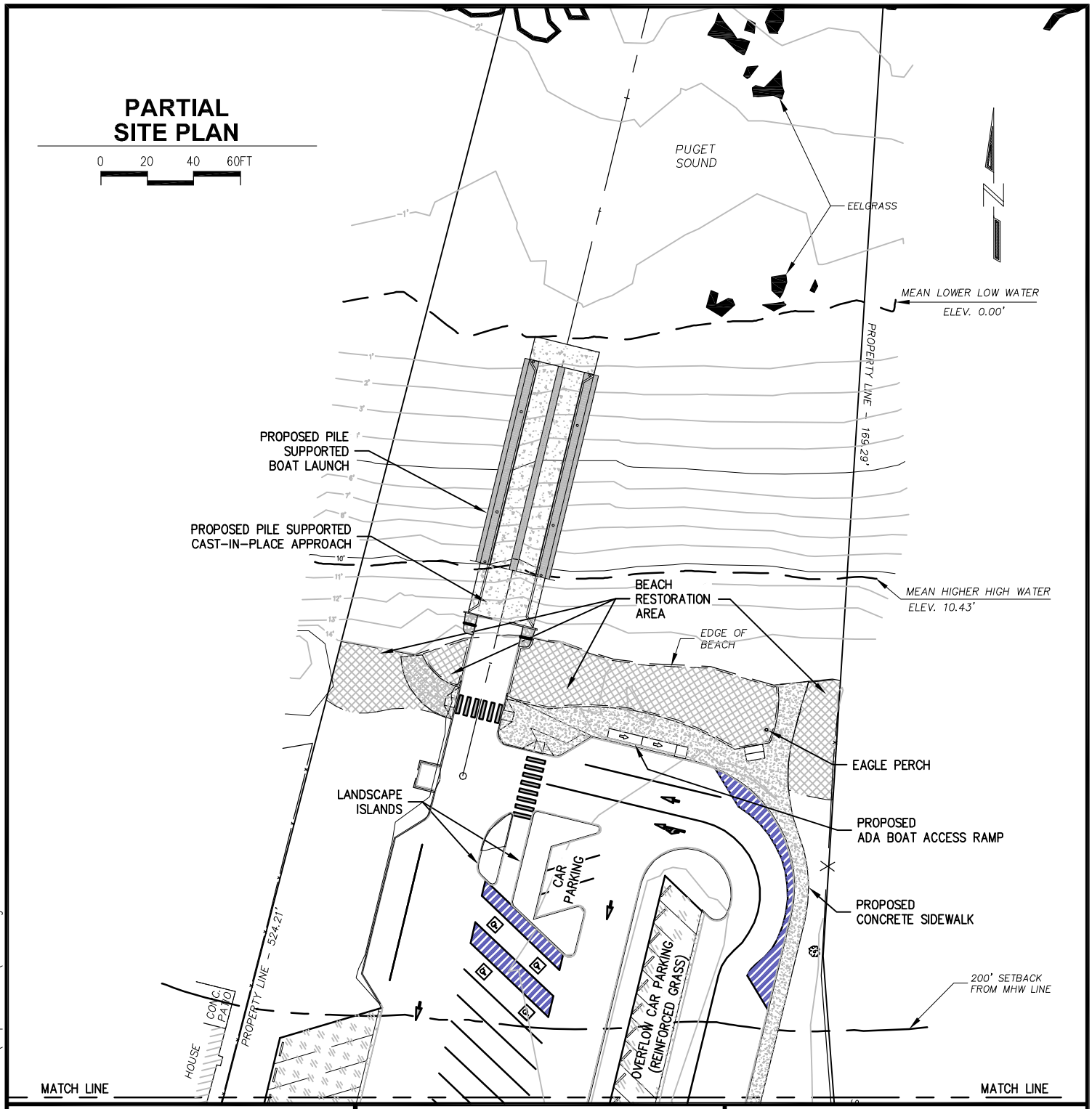

PURPOSE: RESTORE RECREATIONAL BOAT LAUNCH FUNCTION TO SITE

DATUM: 0.0' MLLW

ADJACENT PROPERTY OWNERS:

1. BULGER
2. SWEENEY
3. KITSAP Co.
4. RUNKLE & MORDAUNT
5. McLEOD
6. RAWSON
7. TROEMEL
8. ULIVILA
9. ROUPE

POINT NO POINT BOAT LAUNCH
8708 POINT NO POINT RD.

PROPOSED ELEVATED BOAT LAUNCH PLAN VIEW NORTH

WA. DEPT. OF FISH & WILDLIFE
600 CAPITOL WAY NORTH
OLYMPIA, WA. 98501-1091

PROPOSED: DEMOLISH EXISTING FACILITY, CONSTRUCT NEW ELEVATED LAUNCH

IN: PUGET SOUND
NEAR: HANSVILLE
COUNTY: KITSAP **STATE:** WA.

APPLICATION BY:
DEPT. OF FISH AND WILDLIFE
UPI No.:

SHEET 5 **of** 8 **DATE:** MAR. 2010

3/29/10
Drawings\2008\084052.01 Point No Point Boat Launch\Jarpa Permit\P-05.dwg

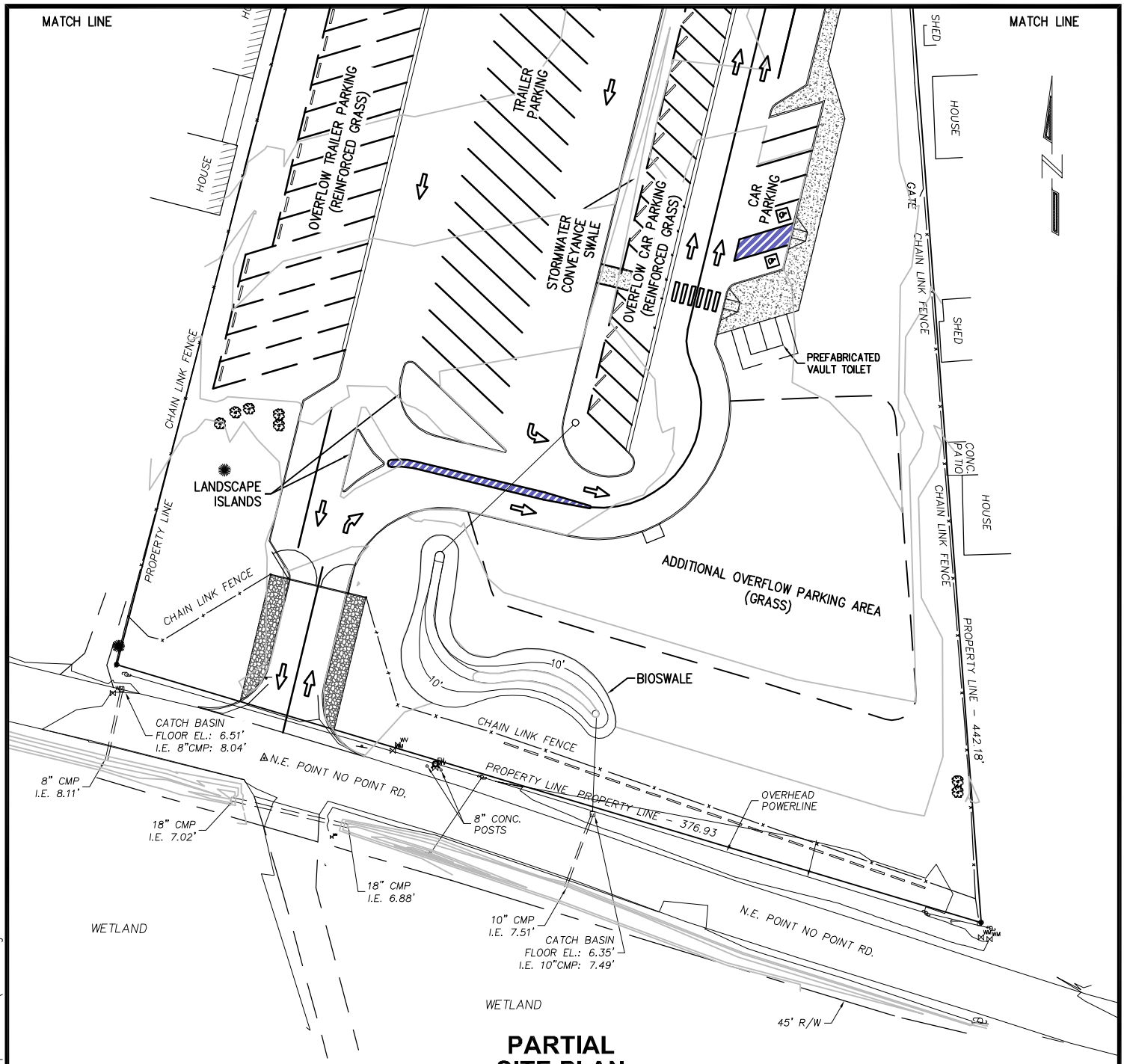

PARTIAL SITE PLAN

0 20 40 60FT

PURPOSE: RESTORE RECREATIONAL BOAT LAUNCH FUNCTION TO SITE

DATUM: 0.0' MLLW

ADJACENT PROPERTY OWNERS:

1. BULGER
2. SWEENEY
3. KITSAP Co.
4. RUNKLE & MORDAUNT
5. McLEOD
6. RAWSON
7. TROEMEL
8. ULIVILA
9. ROUPE

POINT NO POINT BOAT LAUNCH 8708 POINT NO POINT RD.

PROPOSED ELEVATED BOAT LAUNCH PLAN VIEW SOUTH

WA. DEPT. OF FISH & WILDLIFE
600 CAPITOL WAY NORTH
OLYMPIA, WA. 98501-1091

PROPOSED: DEMOLISH EXISTING FACILITY, CONSTRUCT NEW ELEVATED LAUNCH

IN: PUGET SOUND
NEAR: HANSVILLE
COUNTY: KITSAP **STATE:** WA.

APPLICATION BY:
DEPT. OF FISH AND WILDLIFE
UPI No.:

SHEET 6 **of** 8 **DATE:** MAR. 2010

3/30/10
Drawings\2008\084052.01 Point No Point Boat Launch\Jarpa Permit\P-06.dwg

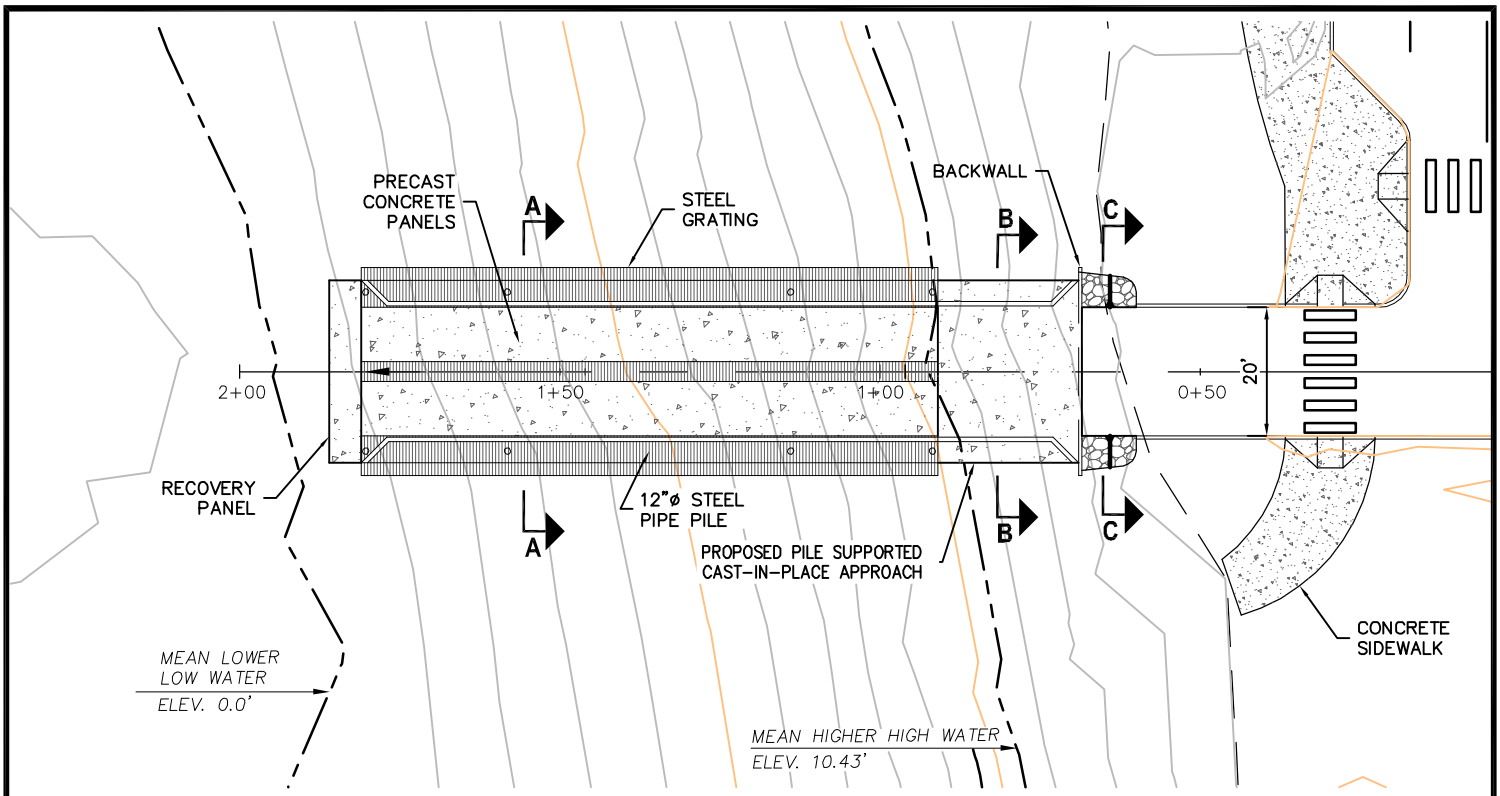

BOAT RAMP PLAN

0 10 20 30FT

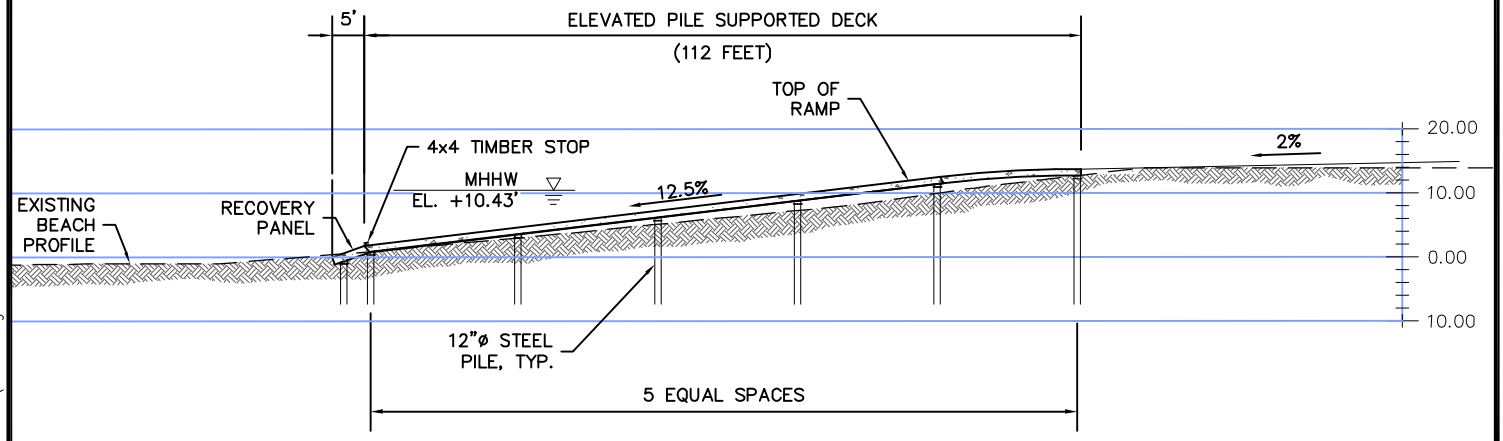

BOAT RAMP PROFILE

0 10 20 30FT

PURPOSE: RESTORE RECREATIONAL BOAT LAUNCH FUNCTION TO SITE

DATUM: 0.0' MLLW

ADJACENT PROPERTY OWNERS:

1. BULGER
2. SWEENEY
3. KITSAP Co.
4. RUNKLE & MORDAUNT
5. McLEOD
6. RAWSON
7. TROEMEL
8. ULIVILA
9. ROUPE

POINT NO POINT BOAT LAUNCH
8708 POINT NO POINT RD.

PROPOSED BOAT LAUNCH PLAN AND PROFILE

WA. DEPT. OF FISH & WILDLIFE
600 CAPITOL WAY NORTH
OLYMPIA, WA. 98501-1091

PROPOSED: DEMOLISH EXISTING FACILITY, CONSTRUCT NEW ELEVATED LAUNCH

IN: PUGET SOUND
NEAR: HANSVILLE
COUNTY: KITSAP **STATE:** WA.

APPLICATION BY:
DEPT. OF FISH AND WILDLIFE
UPI No.:

SHEET 7 **of** 8 **DATE:** MAR. 2010

3/30/10
Drawings\2008\084052.01 Point No Point Boat Launch\Jarpa Permit\P-07.dwg

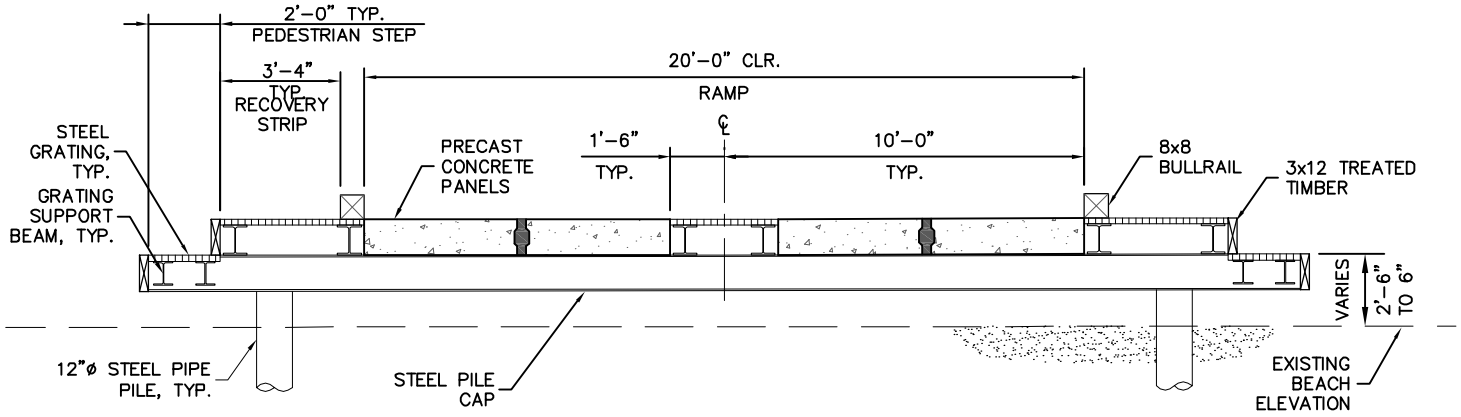

SECTION A-A

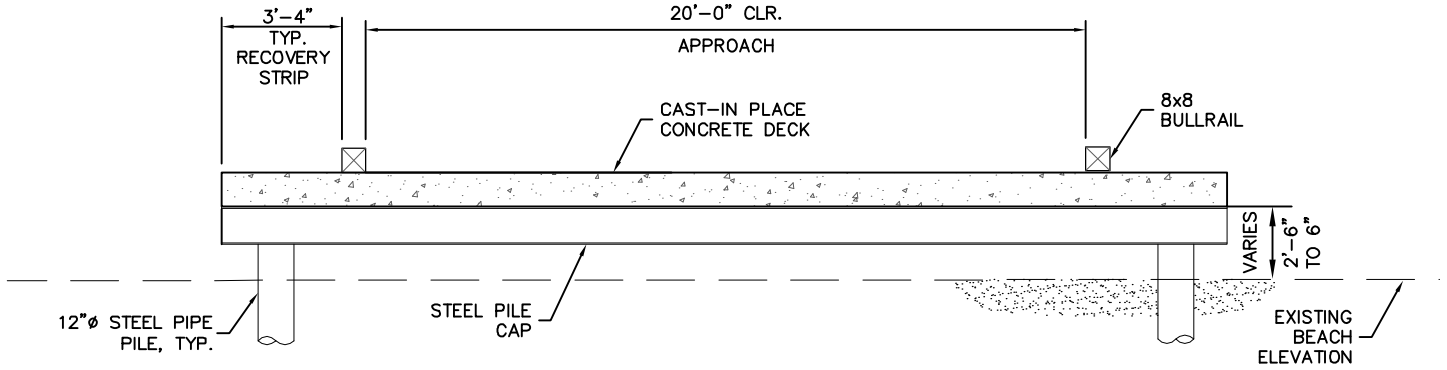

SECTION B-B

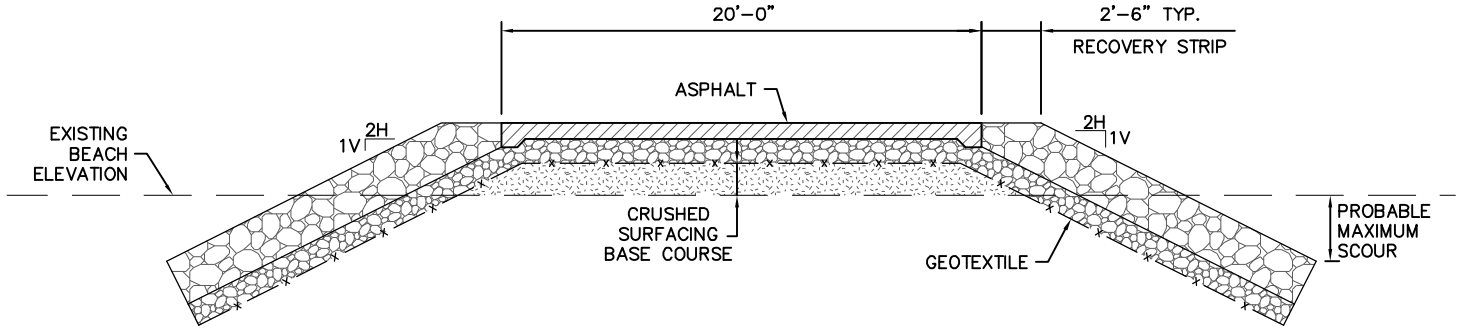

SECTION C-C

(ALL ABOVE MHW EL. +9.6')

PURPOSE: RESTORE RECREATIONAL BOAT LAUNCH FUNCTION TO SITE

DATUM: 0.0' MLLW

ADJACENT PROPERTY OWNERS:

1. BULGER
2. SWEENEY
3. KITSAP Co.
4. RUNKLE & MORDAUNT
5. McLEOD
6. RAWSON
7. TROEMEL
8. ULIVILA
9. ROUPE

POINT NO POINT BOAT LAUNCH
8708 POINT NO POINT RD.

PROPOSED BOAT LAUNCH SECTIONS

WA. DEPT. OF FISH & WILDLIFE
600 CAPITOL WAY NORTH
OLYMPIA, WA. 98501-1091

PROPOSED: DEMOLISH EXISTING FACILITY, CONSTRUCT NEW ELEVATED LAUNCH

IN: PUGET SOUND
NEAR: HANSVILLE
COUNTY: KITSAP **STATE:** WA.

APPLICATION BY:
DEPT. OF FISH AND WILDLIFE
UPI No.:

SHEET 8 **of** 8 **DATE:** MAR. 2010

3/29/10
Drawings\2008\084052.01 Point No Point Boat Launch\Jarpa Permit\P-08.dwg