WASHINGTON DEPARTMENT OF FISH AND WILDLIFE

FALLERT CREEK HATCHERY FOOTBRIDGE INSTALLATION CZ:H1:11-1

INDEX

SHEET NO.

1. COVER SHEET
2. VICINITY MAP
3. SITE PLAN
4. EXISTING WORK SITE PLAN & ELEVATION
5. FOOTBRIDGE PLAN & ELEVATION
6. CONCRETE FABRICATION
7. FOOTBRIDGE CUTTING DETAILS
8. BRIDGE MOUNTING DETAILS
9. STAIRWAY ELEVATIONS & DETAILS

ABBREVIATIONS

ALUM	–	ALUMINUM
?	–	ANGLE
APPROX.	–	APPROXIMATELY
BM	–	BENCH MARK
?	–	CENTERLINE
CLR.	–	CLEARANCE
CONC	–	CONCRETE
ø	–	DIAMETER
ELEV	–	ELEVATION
F.B.	–	FLAT BAR
F.C.	–	FISH CONDUIT
FTG	–	FOOTING
F.W.	–	FISHWAY
GALV	–	GALVANIZED
GA.	–	GAUGE
HSS	–	STRUCTURAL TUBING
ID	–	INSIDE DIAMETER
IE	–	INVERT ELEVATION
LFW	–	LOWER FISHWAY
LG	–	LONG
M.B.	–	MACHINE BOLT
MFG.	–	MANUFACTURER'S
MISC.	–	MISCELLANEOUS
MOD.	–	MODEL
OC	–	ON CENTER
OSB	–	ORIENTED STRAND BOARD
OD	–	OUTSIDE DIAMETER
PAV'T	–	ASPHALT CONCRETE PAVEMENT
?	–	PLATE
PT	–	PRESSURE TREATED
REQ'D	–	REQUIRED
SEC.	–	SECTION
S.F.	–	SQUARE FEET
SHT.	–	SHEET
SPEC'S.	–	PROJECT SPECIFICATIONS
S.S.	–	STAINLESS STEEL
TYP	–	TYPICAL
UFW	–	UPPER FISHWAY
W.S.	–	WATER SURFACE

SHEET SYMBOLS

DETAIL

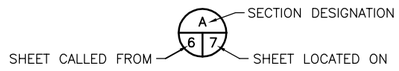

SECTION

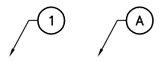

NOTE REFERENCE

REFERENCE DESIGNATION TO NOTE APPEARING ON SAME SHEET

PROJECT NO.	
CZ:H1:11-1	
SHEET	OF
1	9

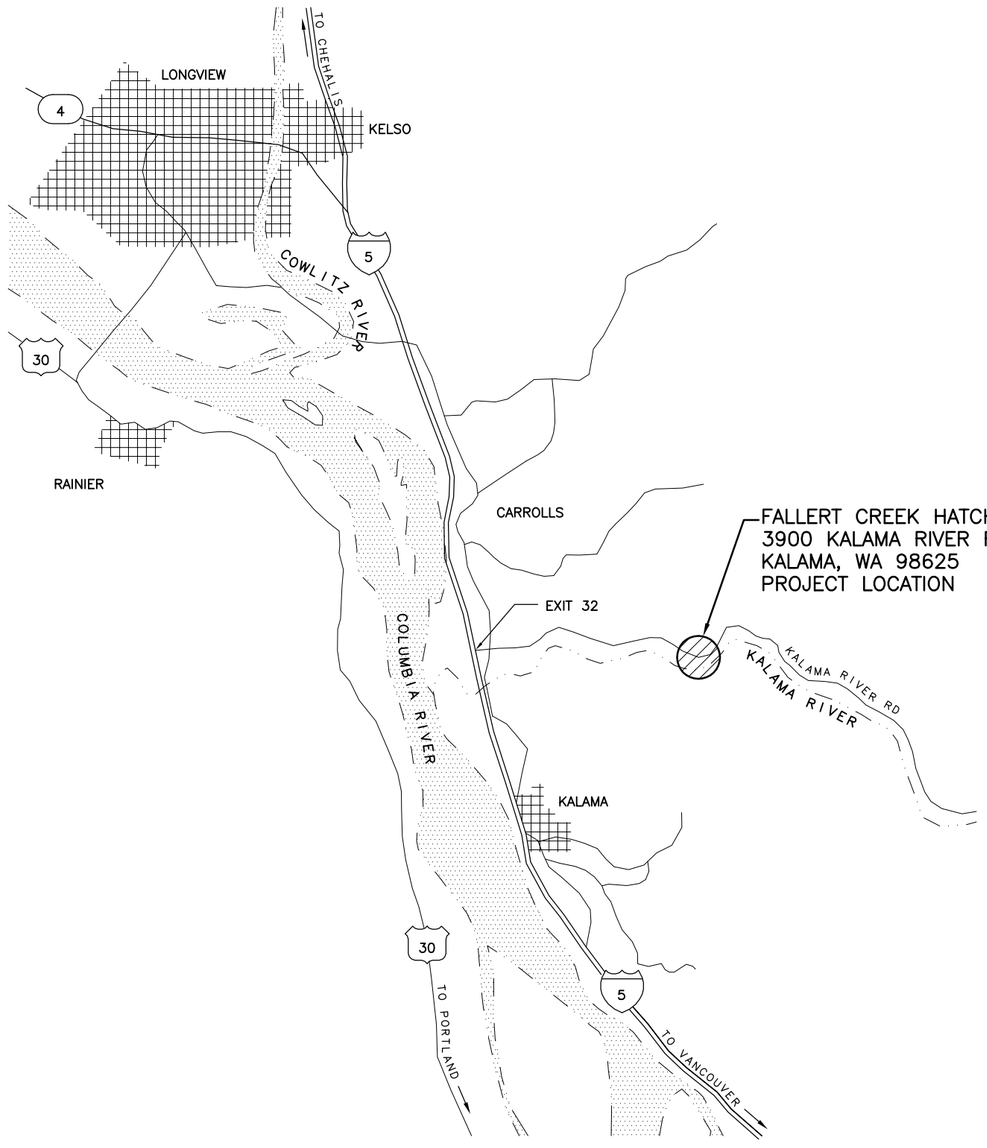

VICINITY MAP
NOT TO SCALE

STATE MAP
NOT TO SCALE

WASHINGTON STATE
DEPARTMENT OF FISH AND WILDLIFE

SYM	DATE	REVISION DESCRIPTION	BY

APPROVED AND RELEASED FOR CONSTRUCTION

CHIEF ENGINEER ..... DATE: .....
PROGRAM ..... DATE: .....

0 —— 1"
BAR MEASURES ONE INCH ON ORIGINAL DRAWINGS

DESIGNED BY
CHECKED BY
DRAWN BY A. JOHNSON
DATE 6/2/2011

FALLERT CREEK HATCHERY
FOOTBRIDGE INSTALLATION
VICINITY MAP

PROJECT NO. CZ:H1:11-1

SHEET 2 OF 9

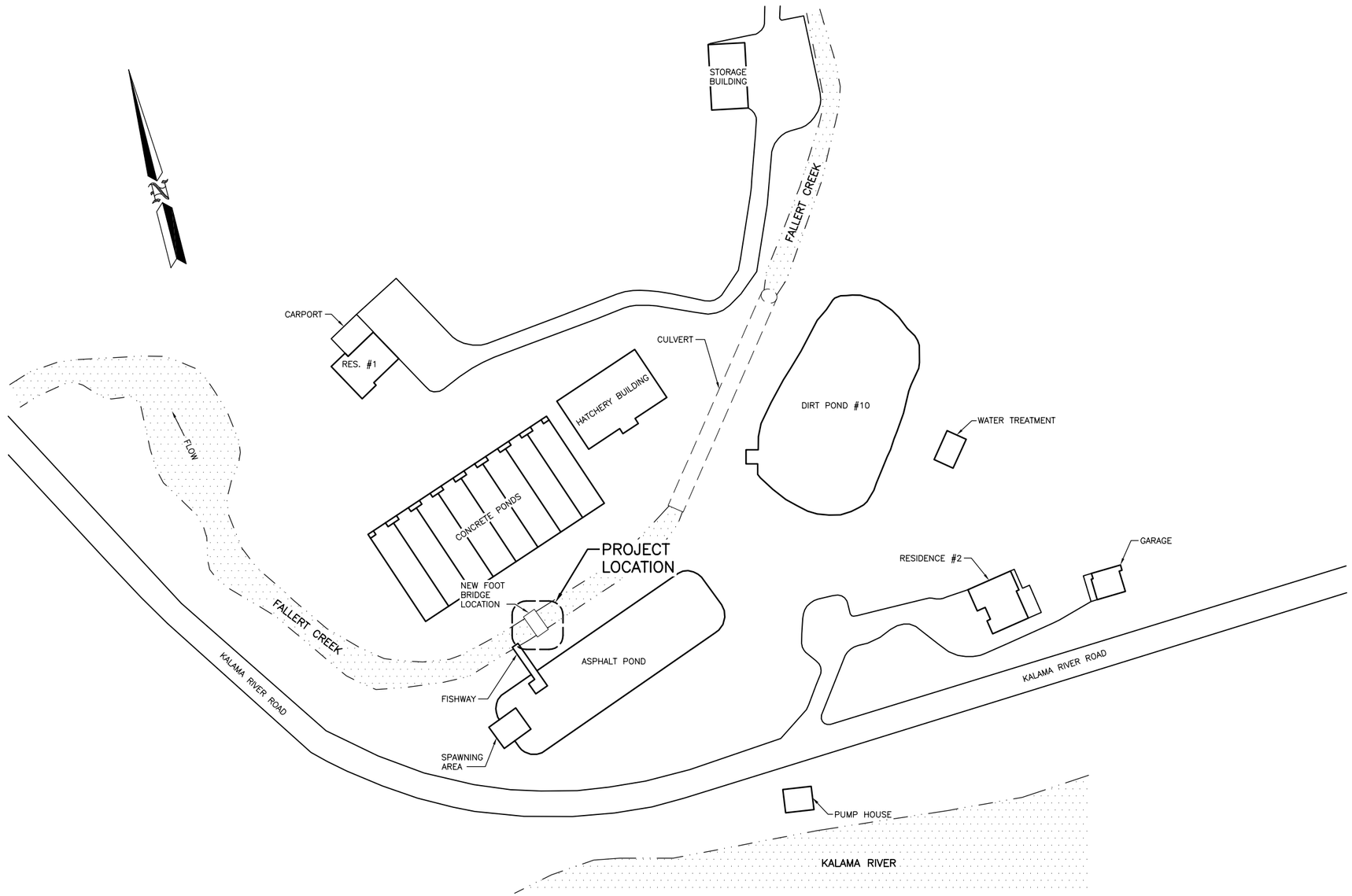

SITE PLAN
NOT TO SCALE

WASHINGTON STATE
DEPARTMENT OF FISH AND WILDLIFE

SYM	DATE	REVISION DESCRIPTION	BY

APPROVED AND RELEASED FOR CONSTRUCTION

CHIEF ENGINEER ..... DATE: .....
PROGRAM ..... DATE: .....

0 —— 1"
BAR MEASURES ONE INCH ON ORIGINAL DRAWINGS

DESIGNED BY
CHECKED BY
DRAWN BY A. JOHNSON
DATE 6/2/2011

FALLERT CREEK HATCHERY
FOOTBRIDGE INSTALLATION
SITE PLAN

PROJECT NO. CZ:H1:11-1

SHEET 3 OF 9

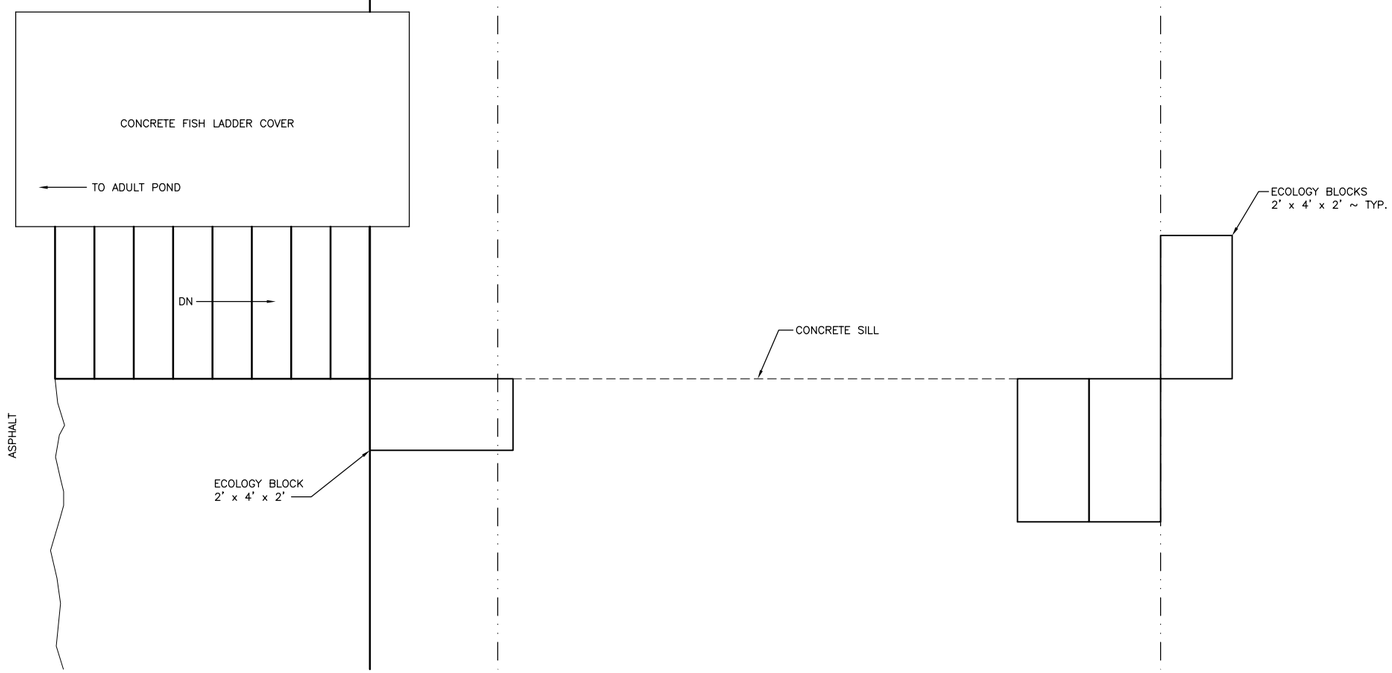

EXISTING WORK SITE PLAN
NOT TO SCALE

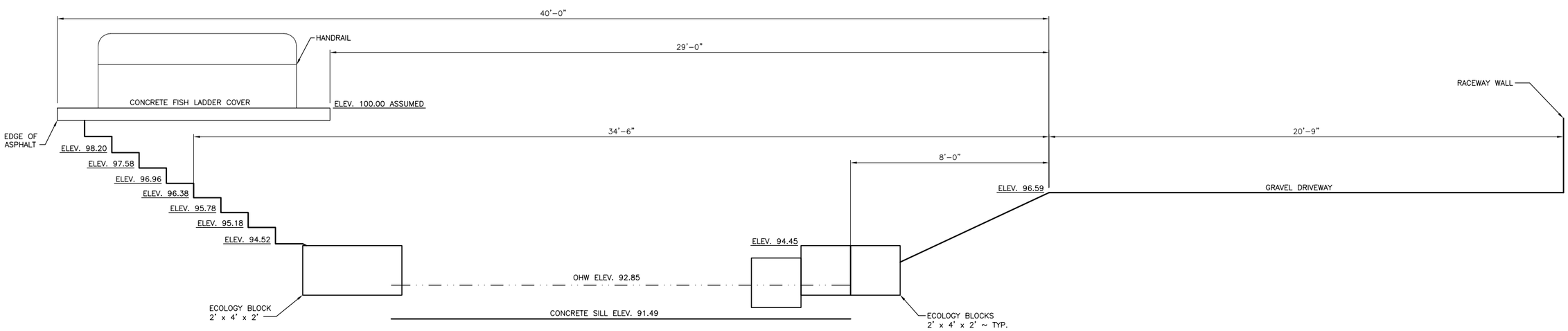

EXISTING WORK SITE ELEVATION
NOT TO SCALE

WASHINGTON STATE
DEPARTMENT OF FISH AND WILDLIFE

SYM	DATE	REVISION DESCRIPTION	BY
		APPROVED AND RELEASED FOR CONSTRUCTION	

CHIEF ENGINEER ..... DATE: .....
PROGRAM ..... DATE: .....

0 —— 1"
BAR MEASURES
ONE INCH ON
ORIGINAL DRAWINGS

DESIGNED BY
CHECKED BY
DRAWN BY A. JOHNSON
DATE 6/2/2011

FALLERT CREEK HATCHERY
FOOTBRIDGE INSTALLATION
EXISTING WORK SITE
PLAN & ELEVATION

PROJECT NO.
CZ:H1:11-1

SHEET 4 OF 9

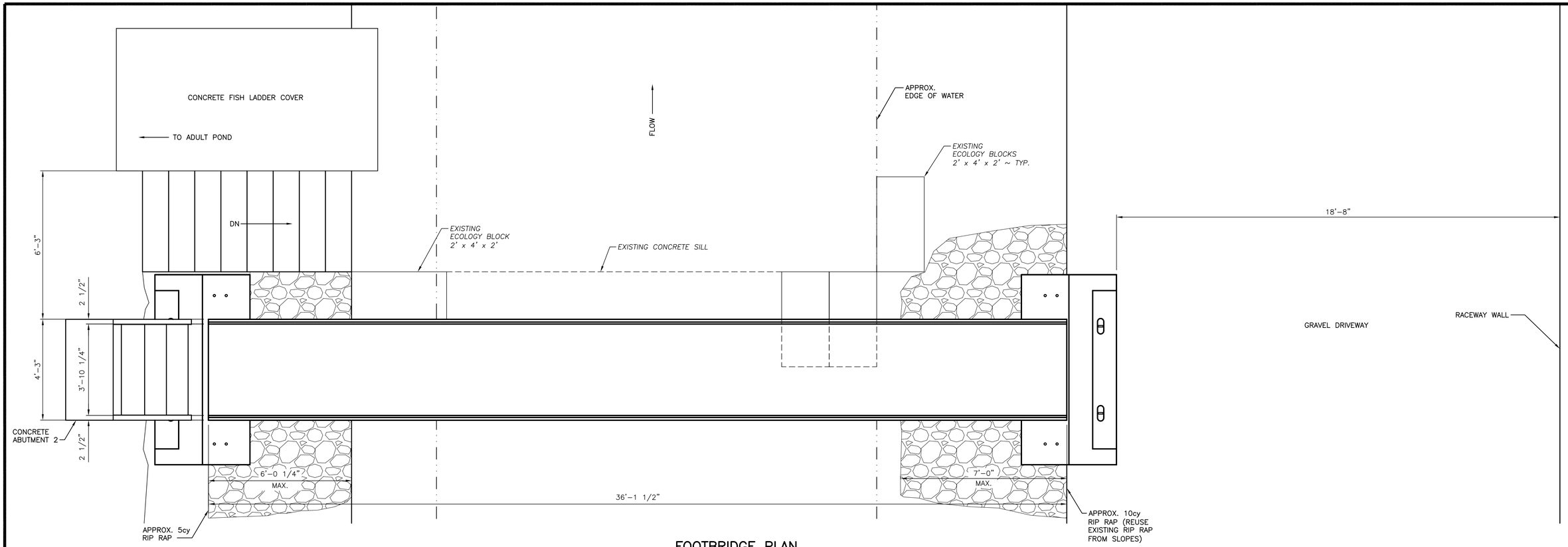

FOOTBRIDGE PLAN
NOT TO SCALE

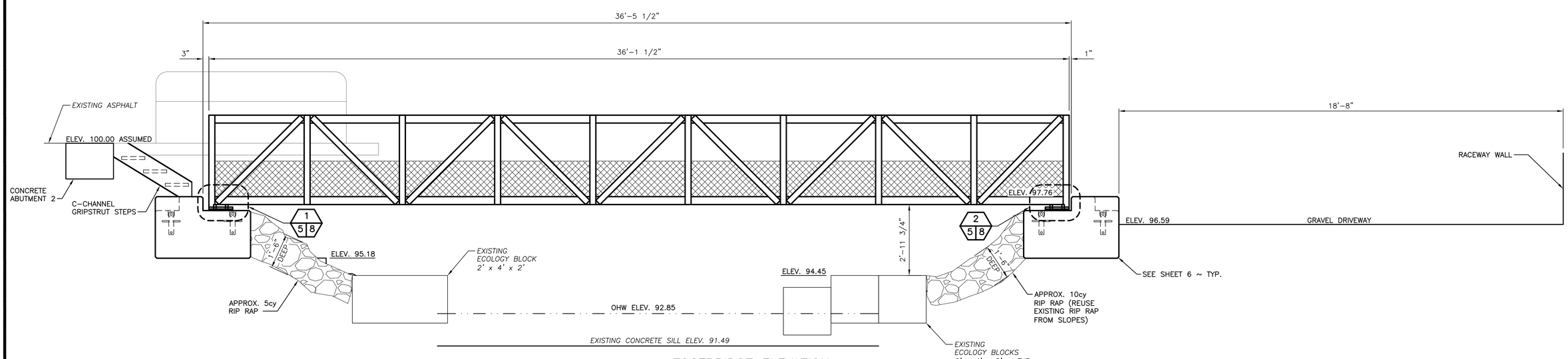

FOOTBRIDGE ELEVATION
NOT TO SCALE

WASHINGTON STATE
DEPARTMENT OF FISH AND WILDLIFE

SYM	DATE	REVISION DESCRIPTION	BY

APPROVED AND RELEASED FOR CONSTRUCTION
CHIEF ENGINEER ..... DATE: .....
PROGRAM ..... DATE: .....

0 — 1"
BAR MEASURES ONE INCH ON ORIGINAL DRAWINGS

DESIGNED BY
CHECKED BY
DRAWN BY A. JOHNSON
DATE 6/2/2011

FALLERT CREEK HATCHERY
FOOTBRIDGE INSTALLATION
FOOTBRIDGE
PLAN & ELEVATION

PROJECT NO. CZ:H1:11-1
SHEET 5 OF 9

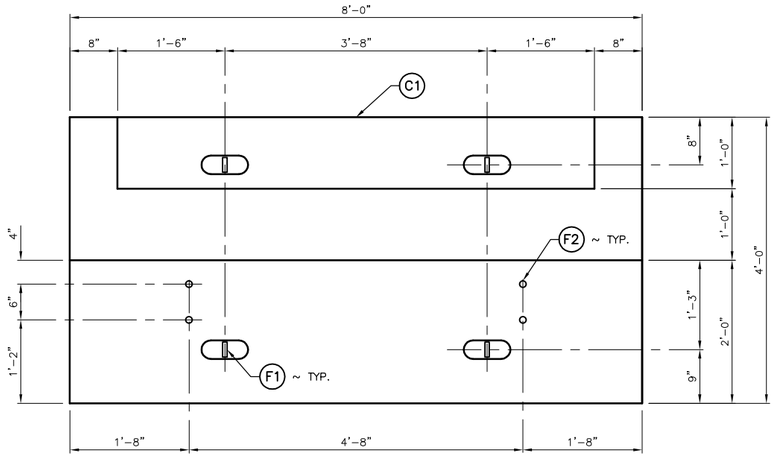

ABUTMENT PLAN
SCALE: 1" = 1'-0"

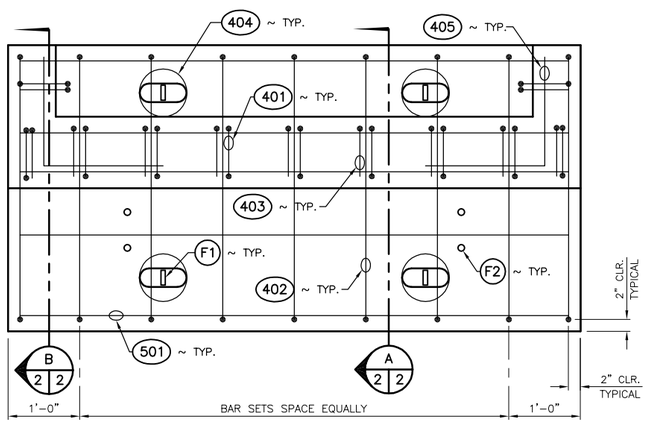

REINFORCEMENT PLAN
SCALE: 1" = 1'-0"

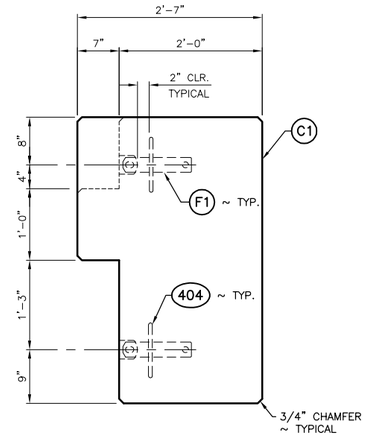

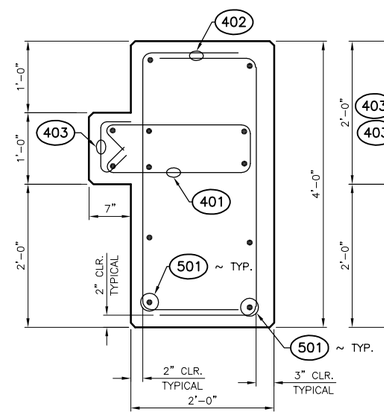

SECTION A 2 2
SCALE: 1" = 1'-0"

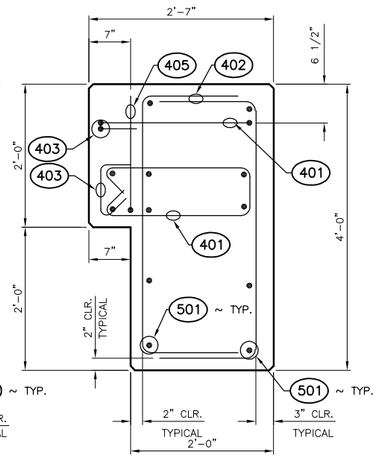

SECTION B 2 2
SCALE: 1" = 1'-0"

CONCRETE FABRICATION

MARK	MATERIAL	QUANTITY	REMARKS
C1	CONCRETE ~ 4000 PSI 28 DAY COMPRESSIVE STRENGTH WITH 6% AIR ENTRAINMENT MAXIMUM WATER CEMENT RATIO BY WEIGHT = 0.50 SUBMIT CONCRETE MIX DESIGN FOR APPROVAL PRIOR TO POUR SMOOTH FINISH	AS REQUIRED	
F1	FACE INSERT ~ DAYTON RICHMOND P-94 FLEET LIFT T-ANCHOR ~ 8 TON CAPACITY (PRODUCT CODE FL119) ~ ANCHOR LENGTH = 11 1/8 INCHES	8	[LIFTING ANCHORS]
F2	1/2 INCH DIAMETER CONCRETE SIMPSON TITEN HD SCREW ANCHOR, (2) PER FOOT, BY CONTRACTOR	8	[BRIDGE TO ABUTMENT]

NOTES:

1) CONSTRUCTION METHODS, LIFTING AND TRANSPORT SHALL BE IN ACCORDANCEWITH STANDARD PRACTICES OF THE CONCRETE INDUSTRY.

2) REINFORCEMENT ~ SEE BENDING DIAGRAM AND BAR LIST WHERE SHOWN.

BAR LIST

MARK	SIZE	GRADE	QUANTITY EACH ABUTMENT	TOTAL QUANTITY	REMARKS
401	4	60	9	18	
402	4	60	18	36	
403	4	60	9	18	
404	4	60	4	8	
405	4	60	2	4	
501	5	60	12	24	

MINIMUM BEND DIAMETERS

BAR SIZE	BEND DIAMETERS MEASURED TO THE INSIDE OF BAR	
	PRIMARY	STIRRUPS AND TIES
4	3 INCHES	2 INCHES
5	3 3/4 INCHES	2 1/2 INCHES
NOTE:	1. ALL DIMENSIONS TO BE MEASURED OUT TO OUT OF BAR 2. ALL BARS TO BE ASTM A615.	

LIFTING LOAD PER ABUTMENT
12,000 POUNDS

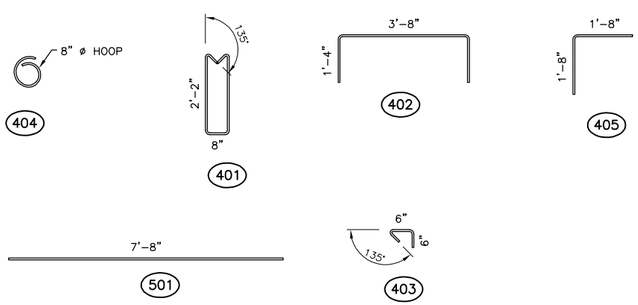

BENDING DIAGRAMS
SCALE: 1/2" = 1'-0"

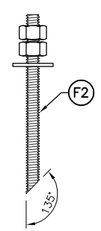

ANCHOR BOLT
NOT TO SCALE

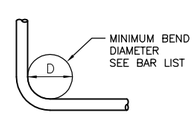

MINIMUM BEND DIAMETERS
NOT TO SCALE

WASHINGTON STATE
DEPARTMENT OF FISH AND WILDLIFE

SYM	DATE	REVISION DESCRIPTION	BY

APPROVED AND RELEASED FOR CONSTRUCTION

CHIEF ENGINEER ..... DATE: .....
PROGRAM ..... DATE: .....

0 —— 1"
BAR MEASURES ONE INCH ON ORIGINAL DRAWINGS

DESIGNED BY
CHECKED BY
DRAWN BY A. JOHNSON
DATE 6/2/2011

FALLERT CREEK HATCHERY
FOOTBRIDGE INSTALLATION
CONCRETE FABRICATION

PROJECT NO. CZ:H1:11-1

SHEET 6 OF 9

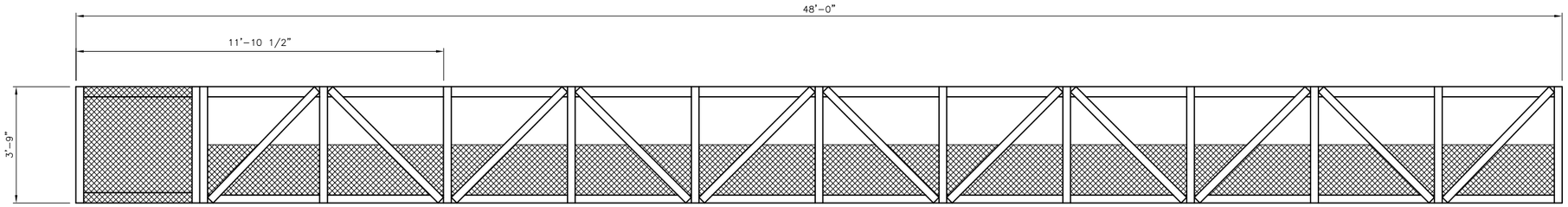

FOOTBRIDGE BEFORE CUT
SCALE: 6" = 1'-0"

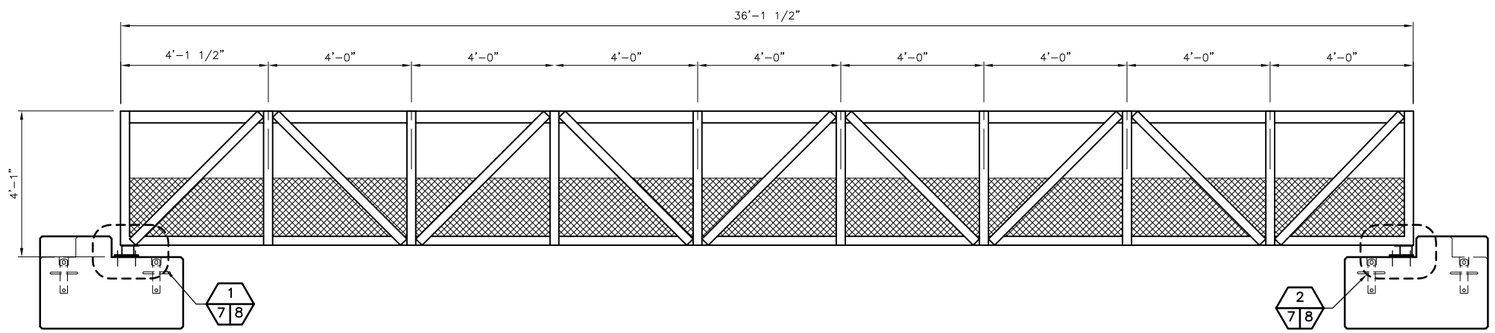

FOOTBRIDGE AFTER CUT
SCALE: 6" = 1'-0"

WASHINGTON STATE
DEPARTMENT OF FISH AND WILDLIFE

SYM	DATE	REVISION DESCRIPTION	BY

APPROVED AND RELEASED FOR CONSTRUCTION

CHIEF ENGINEER ..... DATE: .....
PROGRAM ..... DATE: .....

0 ——— 1"
BAR MEASURES ONE INCH ON ORIGINAL DRAWINGS

DESIGNED BY
CHECKED BY
DRAWN BY A. JOHNSON
DATE 6/2/2011

FALLERT CREEK HATCHERY

FOOTBRIDGE INSTALLATION
FOOTBRIDGE
CUTTING DETAILS

PROJECT NO. CZ:H1:11-1

SHEET 7 OF 9

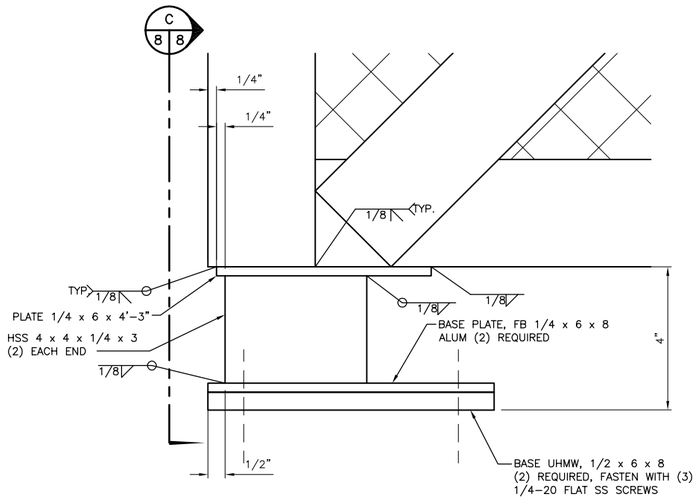

EXPANSION FOOT DETAIL 1/5 8 1/7 8
SCALE: 6" = 1'-0"

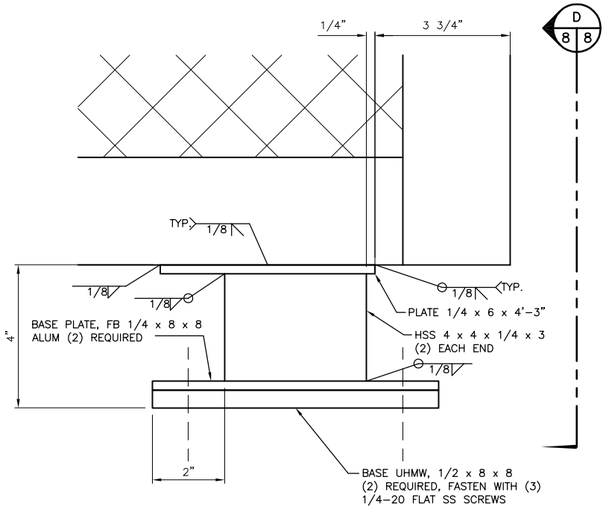

FIXED FOOT DETAIL 2/5 8 2/7 8
SCALE: 6" = 1'-0"

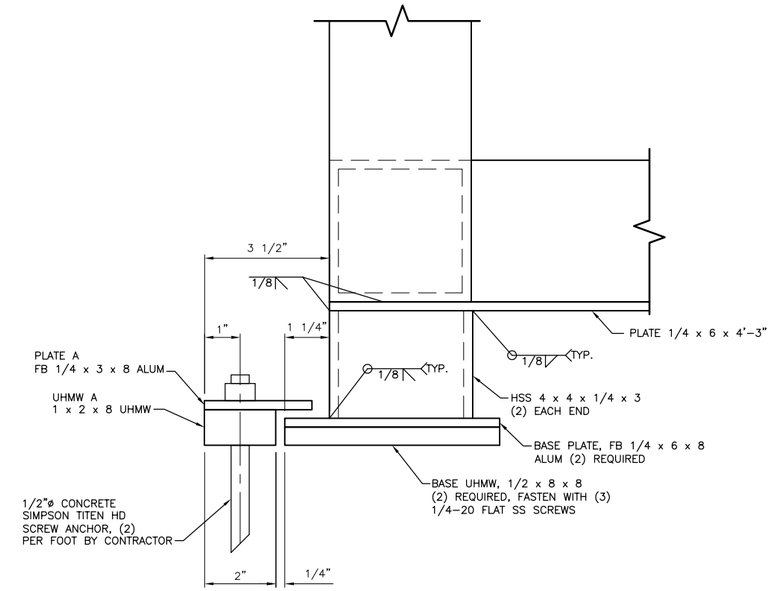

EXPANSION FOOT SECTION C/8 8
SCALE: 6" = 1'-0"

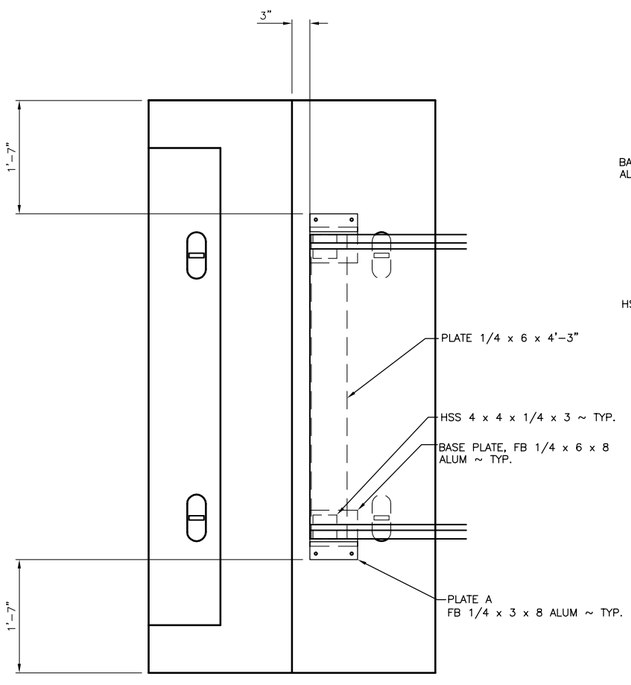

BRIDGE MOUNTING PLAN (EXPANSION)
SCALE: 1" = 1'-0"

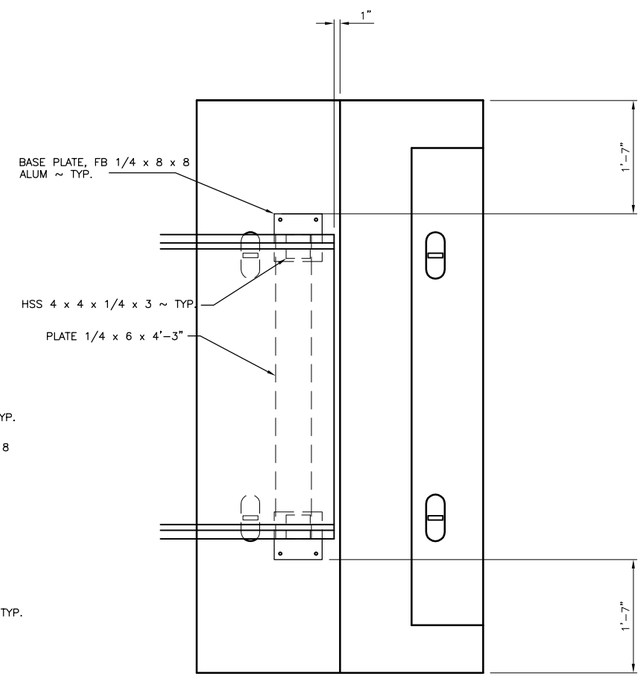

BRIDGE MOUNTING PLAN (FIXED)
SCALE: 1" = 1'-0"

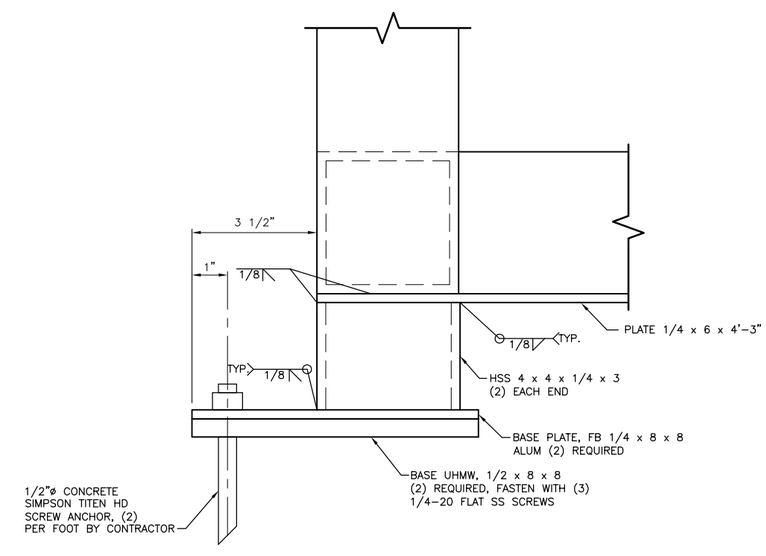

FIXED FOOT SECTION D/8 8
SCALE: 6" = 1'-0"

WASHINGTON STATE
DEPARTMENT OF FISH AND WILDLIFE

SYM	DATE	REVISION DESCRIPTION	BY

APPROVED AND RELEASED FOR CONSTRUCTION

CHIEF ENGINEER ..... DATE: .....
PROGRAM ..... DATE: .....

0 —— 1"
BAR MEASURES
ONE INCH ON
ORIGINAL DRAWINGS

DESIGNED BY
CHECKED BY
DRAWN BY A. JOHNSON
DATE 6/2/2011

FALLERT CREEK HATCHERY
FOOTBRIDGE INSTALLATION
BRIDGE MOUNTING DETAILS

PROJECT NO.
CZ:H1:11-1

SHEET 8 OF 9

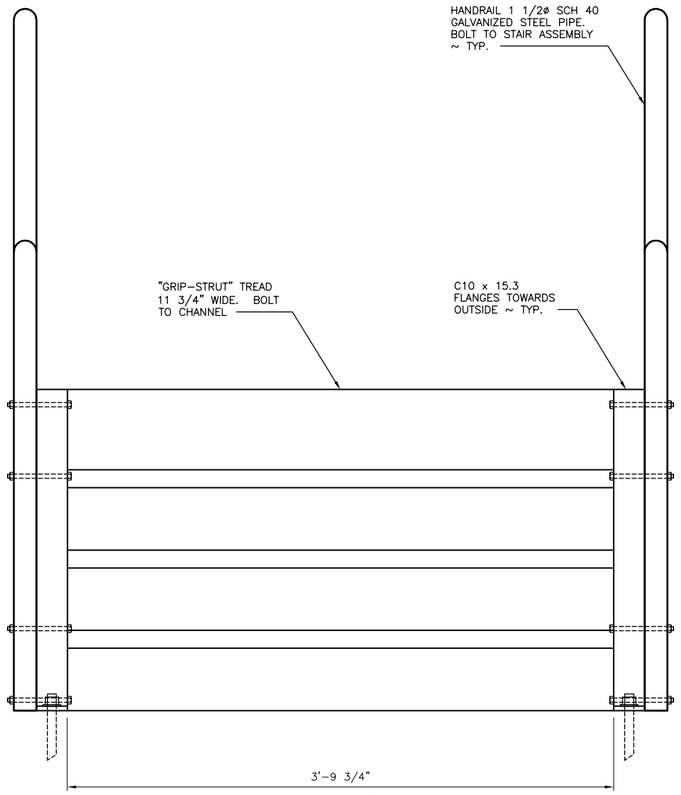

ELEVATION

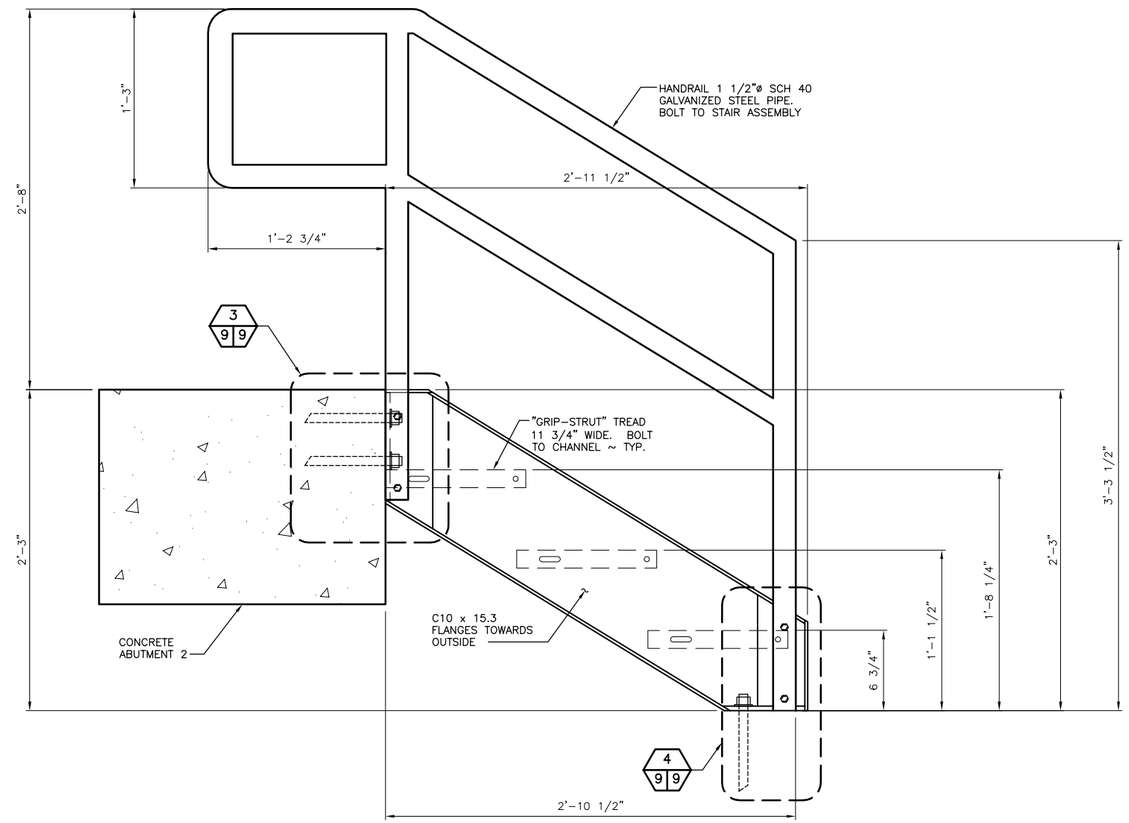

SIDE ELEVATION

STAIRWAY
NOT TO SCALE

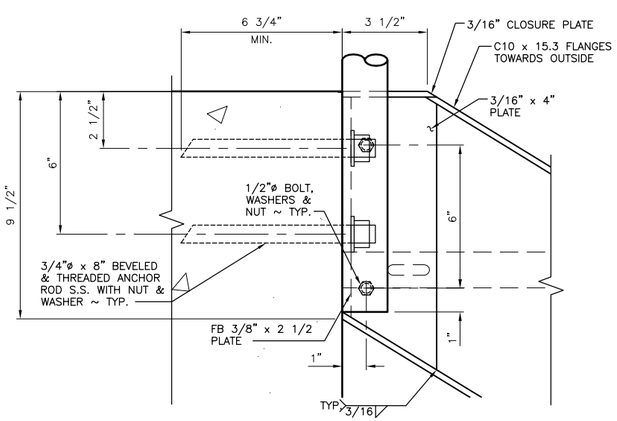

DETAIL 3 (9 9)
NOT TO SCALE

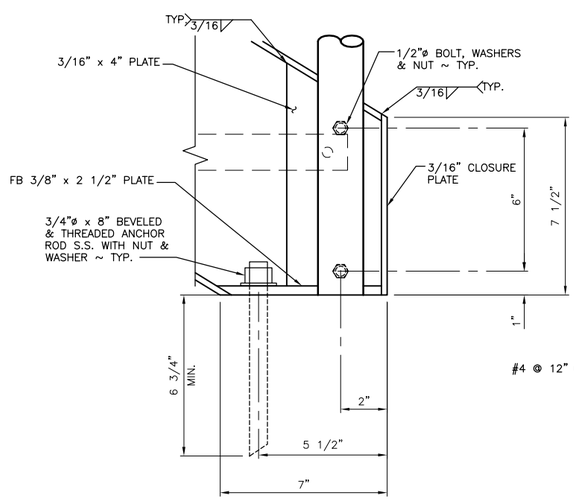

DETAIL 4 (9 9)
NOT TO SCALE

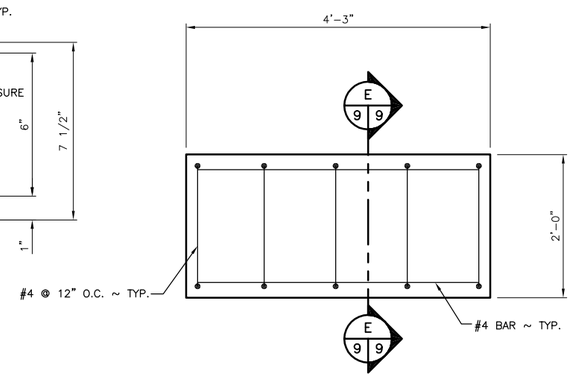

ABUTMENT 2 REINFORCEMENT PLAN
NOT TO SCALE

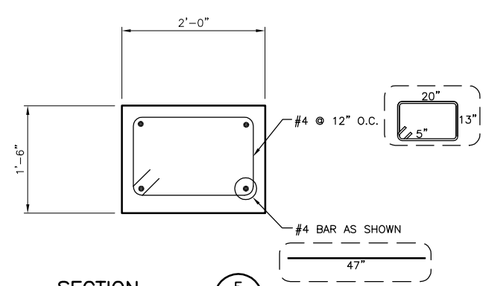

SECTION E (9 9)
NOT TO SCALE

WASHINGTON STATE
DEPARTMENT OF FISH AND WILDLIFE

SYM	DATE	REVISION DESCRIPTION	BY

APPROVED AND RELEASED FOR CONSTRUCTION

CHIEF ENGINEER ..... DATE: .....
PROGRAM ..... DATE: .....

0 —— 1"
BAR MEASURES ONE INCH ON ORIGINAL DRAWINGS

DESIGNED BY
CHECKED BY
DRAWN BY A. JOHNSON
DATE 6/2/2011

FALLERT CREEK HATCHERY
FOOTBRIDGE INSTALLATION
STAIRWAY
ELEVATION & DETAILS

PROJECT NO. CZ:H1:11-1

SHEET 9 OF 9