Biological Assessment Addendum
For The Beebe Springs Natural Area Development
Phase 4 Project

Chelan, Washington

Prepared by: URS Corporation

For

J.A. Brennan Associates, PLLC
Landscape Architects & Planners
100 S. King Street, Suite 200
Seattle, WA 98104

BIOLOGICAL ASSESSMENT ADDENDUM FOR THE BEEBE SPRINGS NATURAL AREA DEVELOPMENT PHASE 4 PROJECT

CHELAN, WASHINGTON

Prepared for
J.A. Brennan Associates, PLLC
Landscape Architects & Planners
100 S. King Street, Suite 200
Seattle, WA 98104

June 2011

1400 Century Square
1501 4th Avenue
Seattle, Washington 98101
(206) 438-2700

URS No. 33762283

CONTENTS

ACRONYMS AND ABBREVIATIONS v

EXECUTIVE SUMMARY ES-1

1.0 INTRODUCTION 1

2.0 PROJECT LOCATION 1

3.0 ACTION AREA 3

4.0 PROJECT DESCRIPTION 5
- 4.1 CONSTRUCTION OF TRAILS, VIEWPOINTS, SIDE CHANNELS, AND LANDSCAPE RESTORATION 5
  - 4.1.1 Trails 5
  - 4.1.2 Viewpoints 5
  - 4.1.3 Landscape Restoration 5
- 4.2 CONSTRUCTION SCHEDULE 7
- 4.3 CONSTRUCTION METHODS 7
- 4.4 CONSERVATION MEASURES/BEST MANAGEMENT PRACTICES 7

5.0 EXISTING ENVIRONMENTAL CONDITIONS 9
- 5.1 BEEBE SPRINGS CREEK WATERSHED AND THE COLUMBIA RIVER NEARSHORE HABITAT IN PROJECT VICINITY 9

6.0 LISTED ESA SPECIES INFORMATION 10

7.0 ESA EFFECTS ANALYSIS 11
- 7.1 EFFECTS TO CRITICAL HABITAT 11
  - 7.1.1 Bull Trout 11

8.0 DETERMINATION OF EFFECT 12

9.0 LITERATURE CITED 14

CONTENTS (Continued)

FIGURES

Figure A Beebe Springs Phase 4 Action Area 4

TABLES

E-1 Change of Effects Determination of Critical Habitat in the Action Area Subsequent to BA submittal ES-3
8-1 Change of Effects Determination of Critical Habitat in the Action Area Subsequent to BA submittal 13

APPENDICES

Appendix A-Phase 3 BA ESA Pathways and Indicators and Effects Determination Tables
Appendix B-Photographs
Appendix C-Project Plan and Concept Drawings
Appendix D-Prescriptions That Apply to Beebe Spring Creek Culvert Removal and Habitat Enhancement

ACRONYMS AND ABBREVIATIONS

BA	Biological Assessment
BMP	Best Management Practices
CHSU	Critical Habitat Sub Unit
DPS	Distinct Population Segment
ECOLOGY	Washington State Department of Ecology
EFH	Essential Fish Habitat
ESA	Endangered Species Act
ESU	Evolutionarily Significant Unit
FMO	Foraging, Migratory, and Overwintering
FMP	Fishery Management Plan
HUC	Hydrologic Unit Code
LWD	Large Woody Debris
OHW	Ordinary High Water
NFIP	National Flood Insurance Program
NMFS	National Marine Fisheries Service (also known as NOAA Fisheries)
PCE	Primary Constituent Elements
PHS	Priority Habitats and Species
RM	River Mile
SERVICES	USFWS and NMFS
USFWS	U.S. Fish and Wildlife Service
USGS	U.S. Geological Survey
WDFW	Washington Department of Fish and Wildlife
WDNR	Washington Department of Natural Resources
WRIA	Watershed Resource Inventory Area

EXECUTIVE SUMMARY

In 2003, the Washington State Department of Fish and Wildlife (WDFW) acquired 182 acres surrounding the Chelan Fish Hatchery. The acquisition provided the opportunity to preserve low elevation Columbia Basin riparian and shrub-steppe habitat, restore habitats on the portion of the property formerly in orchard, and develop education and interpretive opportunities. The Beebe Springs Natural Area will be created on 120 acres of this property. This property sits north of Beebe Bridge along the western shore of the Columbia River, a reservoir (also known as Rocky Reach Reservoir) on the mainstem of the Columbia River created by Rocky Reach Dam, a hydroelectric dam operated by the Chelan Public Utility District No. 1 (CPUD), Wenatchee, Washington. Highway 97 bisects the property north and south. To the west of Highway 97, the property is composed of post-agricultural lands and native shrub-steppe, cliffs, and talus natural areas. Two springs (North and South Beebe Springs) on the west margin of the property erupted into existence during the Ribbon Cliff earthquake of 1872 and later subsided to form the two, Beebe Springs and Beebe Springs Creek. About 1.5 miles to the south is the town of Chelan Falls, and the City of Chelan is approximately 2.5 miles to the west.

The majority of the proposed development area includes 60 acres that gently slope from Highway 97 east toward the Columbia River. A large rock outcrop is located at the northern part of the property and is abutted by a wetland and pond. The riparian zone along the Columbia, where not impacted by past orchard activities, contains a diverse mix of native and non-native, including invasive species. Narrow strips of fringe wetland border the Columbia River along most of the site, especially in the southern portion.

This Biological Assessment Addendum for Phase 4 of the Beebe Springs Natural Area Development is focused on actions relating to trail design, interpretive design, shoreline and shrub-steppe restoration planting, the abandonment of one culvert, and the installation of two 8 inch diameter culverts is a continuation of the implementation of the Beebe Springs Natural Area Master Plan.

Additional phases of this habitat enhancement and watchable wildlife project will be completed at a later date when additional funding is obtained. Phase 1 included the creation of a new spawning/rearing channel (north channel) of Beebe Springs Creek to increase available spawning and rearing habitat for native salmonids. The channel was created to encourage and increase the number of summer/fall-run Chinook salmon, summer-run steelhead (listed as threatened under the ESA), and coho salmon spawning and rearing in Beebe Springs Creek. This channel was completed in 2006 and approximately two thirds of the creek flow is being directed into this channel, with the remainder directed into the original channel (south channel), which serves as additional salmonid habitat and as an overflow channel. Flows in the two channels of Beebe Springs Creek below Highway 97 will be monitored and adjusted to optimize access and available spawning and rearing for salmonids.

Phase 2 included the creation of a side channel to the Columbia River, the enhancement of wetlands, restoration of upland and riparian vegetation, improved site access from Highway 97 and

a portion of the parking area, as well as trails with three pedestrian bridges, viewpoints, and interpretive displays. Phase 3 included the creation of a series of new side channels (including a rearing side channel to provide refuge for juvenile salmonids) to the Columbia River, the enhancement and creation of wetlands, planting of upland and riparian vegetation, removal of a dirt road and two culverts on the south channel of Beebe Springs Creek, enhancement of aquatic habitat in Beebe Springs Creek, hand-carry boat launch, and construction of trails with viewpoints and a viewing pier.

The key goals of this Biological Assessment Addendum are to determine the level of effect (if any) of the project (Phase 4) on newly listed protected species and critical habitats in the project vicinity subsequent to May 2010 and to communicate these findings to the federal agencies. Initial consultation with the U.S. Fish and Wildlife Service (USFWS) and the National Marine Fisheries Service (NMFS) during the first three phases resulted in a list of endangered, threatened, proposed, and candidate species and critical habitats listed under the Endangered Species Act (ESA) that are likely to be found in the project vicinity. The species identified were: upper Columbia River spring-run Evolutionarily Significant Unit (ESU) of Chinook salmon (*Oncorhynchus tshawytscha*), upper Columbia River Distinct Population Segment (DPS) of steelhead trout (*O. mykiss*), Columbia River bull trout (*Salvelinus confluentus*) DPS, marbled murrelet (*Brachyramphus marmoratus*), northern spotted owl (*Strix occidentalis caurina*), Canada lynx (*Lynx canadensis*), grizzly bear (*Ursus arctos horribilis*), Ute ladies'-tresses (*Spiranthes diluvialis*) gray wolf (*Canis lupus*), showy stickseed (*Hackelia venusta*), and Wenatchee Mountains checker-mallow (*Sidalcea oregano* var. *calva*). Of these, only spring-run Chinook salmon, steelhead trout, bull trout, and Ute ladies'-tresses have been documented to occur in the proposed action area. The remaining seven species (grizzly bear, Canada lynx, marbled murrelet, spotted owl, gray wolf, showy stickseed, and the Wenatchee Mountains checker-mallow) are unlikely to occur in the proposed action area due to a lack of suitable habitat, distance from suitable habitat or documented populations, or lack of migratory corridors to known populations. Critical habitat has been designated for the upper Columbia River spring-run Chinook salmon ESU, upper Columbia River steelhead trout DPS, Columbia River bull trout DPS, Canada lynx, gray wolf, and Wenatchee Mountains checker-mallow; but only designated critical habitat for Chinook salmon and steelhead trout occurred in the proposed action area prior to the permitting of Phase 4. A list of Essential Fish Habitat (EFH) species protected under the Magnuson-Stevens Act was also obtained and included: Chinook salmon and coho salmon (*O. kisutch*).

The status of ESA critical habitat for upper Columbia River bull trout has changed since the BA was submitted in May 2010. This Biological Assessment Addendum evaluates potential impacts to bull trout habitat from project implementation based on existing information about the project site's current habitat conditions and suitability for providing the life history requirements of this species. A change of effects determination to bull trout critical habitat based on current status, subsequent to BA submittal on May 2010, is provided in Table E-1.

This BA Addendum is also prepared with the understanding that the proposed Phase 4 activities will all be carried out within the bounds of the protocols established in the July 8, 2008 Biological Opinion (NMFS Tracking No. 2008/03598 and FWS No. 13410-2008-FWS # F 0209) for the Washington State Fish Passage and Habitat Enhancement Programmatic Consultation.

Table E-1
Change of Effects Determination of Critical Habitat in the Action Area Subsequent to BA submittal

	May 2010 BA Submittal		Current	
Species	**Critical Habitat Status**	**Effects Determination**	**Critical Habitat Status**	**Effects Determination**
Bull Trout	Columbia River is proposed as designated critical habitat for bull trout.	Will not destroy or adversely modify/not likely to adversely affect	Columbia River is designated critical habitat for bull trout.	Will not destroy or adversely modify/not likely to adversely affect

1.0 INTRODUCTION

This report has been prepared as a supplement to the Biological Assessment (BA) for the Beebe Springs Natural Area Development Phase 4 project. The BA for Phase 3 was submitted by J.A. Brennan and Associates to the Washington Department of Fish and Wildlife (WDFW) in May 2010 to initiate Endangered Species Act (ESA) consultation for the proposed project. The purpose of this supplement is to update the BA to reflect changes in site development that occurred subsequent to initiation of consultation for Phase 3, and to provide additional information regarding Phase 4 to support the consultation process. The Biological Assessment (BA) was prepared to examine whether or not the Beebe Springs Natural Area Development Phase 3 Project in Chelan County, Washington, would adversely affect federally listed and proposed threatened and endangered species or candidates and critical habitats listed under the Endangered Species Act, or Essential Fish Habitat species protected under the Magnuson-Stevens Act. The Phase 3 BA identified the project impacts, including direct, indirect, interrelated, and interdependent effects, and stated conservation measures to be implemented to mitigate those impacts. This BA was also prepared with the understanding that the proposed Phase 3 activities would all be carried out within the bounds of the protocols established in the July 8, 2008 Biological Opinion (NMFS Tracking No. 2008/03598 and FWS No. 13410-2008-FWS # F 0209) for the Washington State Fish Passage and Habitat Enhancement Programmatic Consultation.

Phase 4 is a continuation of the implementation of the Beebe Springs Natural Area Master Plan, developed by WDFW and J.A. Brennan Associates in 2006. Phases 1, 2 and 3 focused on habitat improvements to Beebe Creek, side channel creation along the Columbia River, and visitor facilities such as a restroom, trail system, parking area, interpretive signage and art installations. Phase 4 of the Beebe Springs Natural Area Improvements is focused within the northernmost area of the site, and consists primarily of trail design, interpretive design, shoreline and shrub-steppe restoration planting, and the abandonment of 1 culvert, and the installation of two 8 inch diameter culverts. This project has received funding from the Washington State Recreation and Conservation office (RCO).

2.0 PROJECT LOCATION

This Biological Assessment Addendum considers the fourth section in a phased habitat enhancement and watchable wildlife project. The Phase 4 project area discussed in this document is within the Beebe Springs Creek sub-basin of a reservoir on the mainstem of the Columbia River. The Phase 4 project area is bounded on the west by Highway 97 and on the east by the shoreline of the Columbia River. The project area extends north along approximately 5,000 feet of Columbia River shoreline from the west side of Beebe Bridge. The project area is wholly within the Beebe Springs Creek sub-basin and nearshore habitat of Columbia River (see Figure 1 of 8 Vicinity Map, Appendix C Project Plan and Concept Drawings). Photographs of the proposed project action area are presented in Appendix B. All major machinery and staging area activities would occur along the roads and on adjacent property. The window for Columbia River in-water work is October 15

to February 28. The abandonment of one culvert, and the installation of two small culverts will be constructed in the dry above the OHWM and done in accordance with conservation measures and reasonable and prudent measures for incidental take outlined in the July 8, 2008 Biological Opinion for Washington State Fish Passage and Habitat Enhancement Restoration Programmatic Consultation (NMFS and USFWS 2008) (Appendix D).

The original channel of the Columbia River is located on the eastern side of the present day reservoir. The historical channel averaged approximately 660 feet in width in the vicinity of the project site and began about 450 feet east of the current west bank of the Columbia River. Depth measurements taken on the Columbia River from a boat by a URS biologist on February 9, 2007 indicated that the substrate of the lake from the shoreline of the project site to the edge of the historic river channel has an average slope of about 1 foot for every 10 to 12 feet of horizontal distance. This closely agrees with an average slope of 11.8 feet of horizontal distance for every 1 foot of elevation indicated by the topographic lines on the Chelan Falls, Washington quadrangle, U.S. Geological Survey topographic map. The substrate of the Columbia River in the nearshore of the project area is primarily composed of cobble and gravel with some sand and boulders and very little fine sediment.

A narrow band of sparse macrophyte beds occurs along the Columbia River shoreline, becoming denser near the mouth of Beebe Creek (DESI 2001b). These macrophyte beds are dominated by non-native Eurasian watermilfoil (*Myriophyllum spicatum spicatum*) (DESI 2001b). The native close-leaved pondweed (*Potamegeton foliosus*) is the second most abundant macrophyte and the native curled pondweed (*Potamogeton crispus*), the third most abundant (DESI 2001b). Coontail (*Ceratophyllum demersum*) and waterweed (*Elodea canadensis*) are two other native species common to the reservoir (DESI 2001b). Native macrophytes appear to have a competitive advantage to Eurasian watermilfoil in water deeper than 10 to 12 feet in depth (DESI 2001b). None of these species was observed during a site visit by a URS biologist during the spring on June 7, 2011.

The Columbia River in the project vicinity has a slight current, with a maximum velocity of approximately 1.2 feet/sec, minimum velocity of about 0.2 foot/sec, and average velocity of 0.5 foot/sec (DESI 2001a). The Columbia River experiences a one to two foot diurnal fluctuation in pool elevation at the project site, based on demand for hydropower and releases of water from Wells and Rocky Reach Dams to meet power demand (BioAnalysts 2000). Typically, the lowest pool elevations occur between 5 AM and 9 AM in the morning and between 5 PM and 9 PM in the late afternoon/evening (BioAnalysts 2000).

The Ordinary High Water Mark (OHWM) on the Columbia River was established by methodology described in the Wetland Delineation and Impacts Report, Beebe Springs Natural Area—Phase 2, Chelan County, Washington (URS 2007), using criteria described by Tim Erkel, USACE Eastern Washington Coordinator (Erkel 2007).

3.0 ACTION AREA

The Action Area is "all areas to be affected directly or indirectly by the federal action and not merely the immediate area involved in the action" (Federal Register 1986). In this case, the Action Area is limited to the project area described above and a region extending a half mile in all directions from the perimeter of the project area. All major machinery and staging activities would occur here. The Action Area is illustrated in Figure A.

Noise associated with trail construction, road and culvert removal, landscape restoration, and viewpoints is expected to extend no more than 0.5 mile from the construction areas. Potential aquatic effects from construction runoff into the Columbia River extend through a mixing zone (WDE 2003) extending approximately 300 feet downstream from the viewpoint construction sites and from the new channel swale construction zone. This area falls within the 0.5 mile radius of the project area.

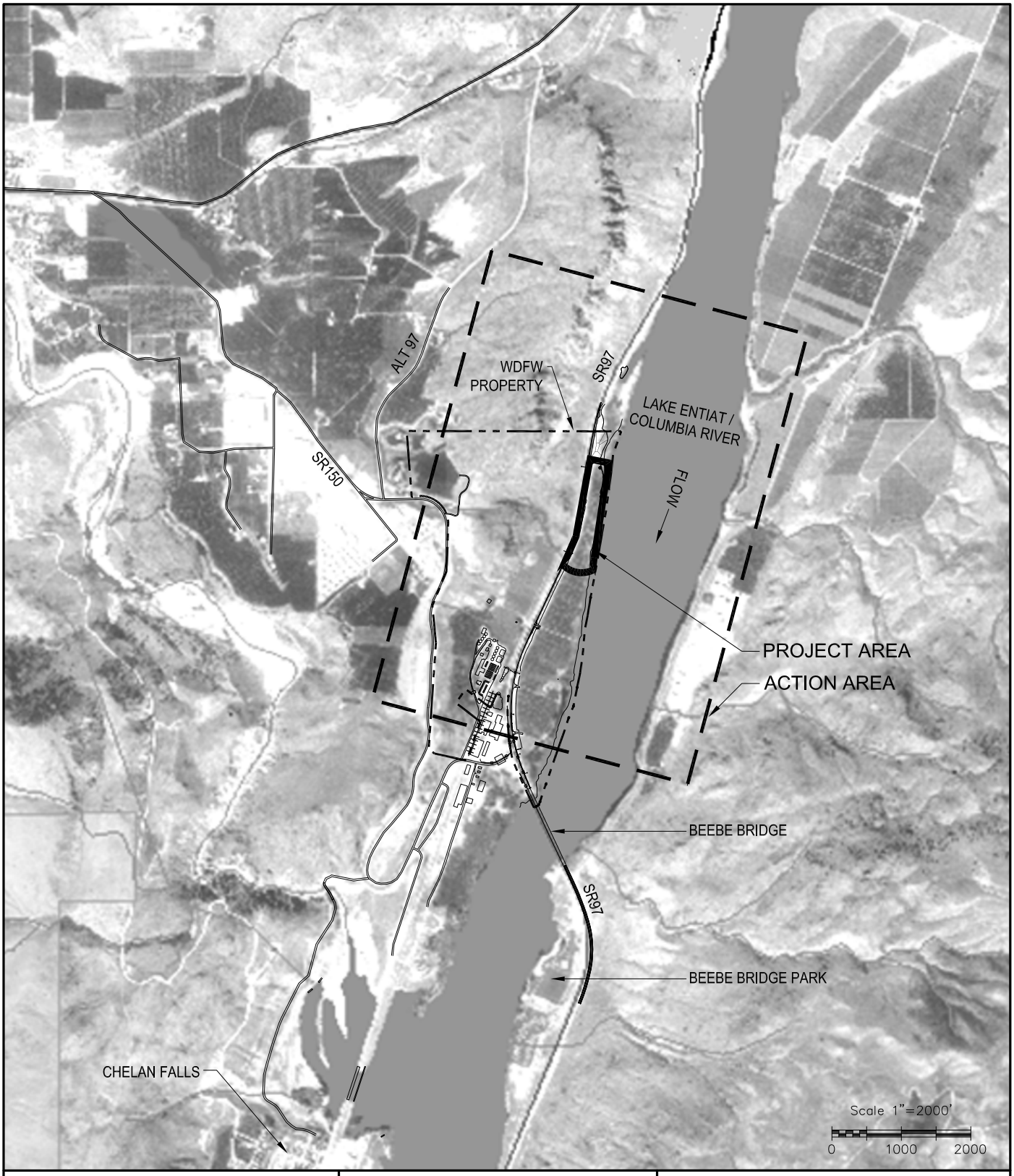

PURPOSE: DEVELOP A NATURAL AREA THAT WILL INCLUDE SALMON AND WILDLIFE ENHANCMENT/ RESTORATION AREAS AND TRAILS

DATUM: NGVD 29
ADJACENT PROPERTY OWNERS: WSDOT, Chelan County PUD, DNR

LATITUDE: 47° 49' 14" N
LONGITUDE: 119° 58' 20" W

WASHINGTON DEPARTMENT OF FISH AND WILDLIFE

BEEBE SPRINGS PHASE 4 ACTION AREA

ADDRESS: SR 97
Chelan, WA 98816

PROPOSED: BEEBE SPRINGS NATURAL AREA PHASE 4
IN: CHELAN COUNTY
AT: CHELAN FISH HATCHERY
COUNTY OF: CHELAN **STATE:** WA
APPL. BY: WASHINGTON DEPARTMENT OF FISH AND WILDLIFE
DATE: JUNE 20, 2011
REVISED:

4.0 PROJECT DESCRIPTION

4.1 CONSTRUCTION OF TRAILS, VIEWPOINTS, SIDE CHANNELS, AND LANDSCAPE RESTORATION

4.1.1 Trails

An Americans with Disabilities Act (ADA) compliant pedestrian trail will lead from the Phase 3 trail loop and run north-south paralleling the Columbia River. The trail will be constructed of 5/8 inch crushed rock 4 inches thick and will be 6 feet wide. The total length of trail installed during this phase is about 1,900 square feet and corresponds to 0.26 acre (11,400 square feet) of added crushed rock surfacing. No trail surfacing or grading will be done within the wetland boundary or below Ordinary High Water.

4.1.2 Viewpoints

Along the trail system, up to three (4) strategically placed viewpoints will allow views of the Columbia River and surroundings. The viewpoints will be constructed to provide opportunities for visitors to observe wildlife along the restored riparian corridor and shrub-steppe environment.

Viewpoints will measure approximately 170 square feet and will be surfaced with a 6-inch thickness of crushed rock. Pine-rail fences will be constructed at the viewpoints to discourage public access beyond the viewpoint. Impervious area associated with viewpoint construction is 510 square feet. No viewpoint surfacing or grading will be done within the wetland boundary or below Ordinary High Water. Total crushed rock pavement will cover 11,910 square feet (.27 acres).

4.1.3 Landscape Restoration

Shrub-steppe and riparian vegetation approved by the Washington Department of Fish and Wildlife (WDFW) will be planted to restore the shoreline and upland parts of the Phase 4 site (Figures 3-8 in Appendix C). Phase 4 restoration of the upland and shoreline vegetation in this area will complement the restoration of previous phases. Approximately 5.67 acres of upland habitat will be seeded with native shrub-steppe grasses, shrubs and forbs. The seeded area will be planted with live shrubs to recreate the low-elevation shrub-steppe historically present on the site. Enhancement of the Entiat Lake shoreline will include removal of non-native Lombardy poplar (*Populus nigra 'Italica'*) and Himalayan blackberry (*Rubus armeniacus*) and planting of native trees and shrubs to create 1.35 acres of complex multistory riparian habitat. A culvert that draws intermittent surface water from the west side of US 97 will be abandoned, and a new channel will be excavated through the shrub steppe landscape, and restored with 1.35 acres of riparian shrub steppe vegetation.

Abandon the Existing Storm Drain Culvert and Create a New Surface Channel

A 135 foot long culvert that drains surface water from the west side of US 97 will be abandoned, and a new channel will be excavated through the shrub-steppe environment to accommodate the runoff. The depth will generally be 18 inches with 5:1 side slopes, tapering to meet existing grade at elevation 714, where the water will flow over a spreader log and disperse over the landscape. The new channel will meander for approximately 260 feet. The bottom width will vary from 0 to 8 feet. This will create approximately 3,788 square feet (0.087 acre) of additional riparian environment. A spreader log will be placed at the outlet channel along the wetland boundary. No channel excavation will be done within the wetland boundary or below Ordinary High Water. Shrub-steppe grasses and forbs (5.67 acres) will be seeded along the trail and other disturbed areas.

- Riparian plantings (1.35 acre) along the Columbia River
- Riparian plantings (0.06 acres) along the new channel

Currently, the culvert fails at about 40 feet upland from the wetland boundary. Headcutting at this location has created a scoured channel 2 feet deep by 4 feet wide that extends to the end of the pipe. As part of the restoration, this headcut channel will be filled, in the uplands area only, to meet existing grade, and will be restored with shrub-steppe vegetation. The upper ten feet of the culvert will be removed and the open end capped to prevent water from entering the pipe. The end will be buried and the new channel routed around the head of the pipe. A spreader log will be placed at the wetland boundary to prevent erosion of the fill material.

Riparian Habitat Restoration

Water birch (Betula occidentalis), mountain alder (Alnus incana), bigleaf maple (Acer macrophyllum), Columbia hawthorn (Crataegus columbiana), peachleaf willow (Salix amygdaloides), black cottonwood (Populus trichocarpa), and ponderosa pine (Pinus ponderosa) will be planted at selected riparian and upland locations to provide a native upper-story of trees to provide canopy and shade to Columbia Rivers shoreline. Most trees will be planted as bareroot stock, but willows will be planted as live stakes and pine trees as either as bareroot stock or container plants. Deciduous tree species shall be planted in groups, ranging from a minimum of six per group to a maximum of 24 per group. Ponderosa pines shall be planted in groups ranging from a minimum of three to a maximum of nine.

Douglas maple (Acer glabrum var. douglasii), serviceberry (Amelanchier alnifolia), clematis (Clematis ligusticfolia), coyote willow (Salix exigua), red-osier dogwood (Cornus sericea), mock orange (Philadelphus lewisii), tall Oregon grape (Berberis aquifolium), choke cherry (Prunus virginiana), smooth sumac (Rhus glabra), oakleaf sumac (Rhus trilobata), golden current (Ribes aureum), nootka rose (Rosa nutkana), woods' rose (Rosa woodsii), blue elderberry (Sambucus cerulea), and snowberry (Symphoricarpos albus) will be planted to provide a multilayered native shrub understory in riparian areas. Spacing of shrubs shall be an average of 48 inches between plants and planted in groups ranging from a minimum of six to a maximum of twenty-four.

Shrub Steppe Habitat Restoration

A grass seed mix consisting of tufted hairgrass (*Deschampsia cespitosa*), basin wildrye (*Elymus cinereus*), thickspike wheatgrass (*Elymus lanceolatus*), Idaho fescue (*Festuca idahoensis*), western mannagrass (*Glyceria occidentalis*), and fowl mannagrass (*Glyceria striata*) shall be broadcast or drilled between riparian trees and shrubs at a rate of application of 8 pounds per acre. Bitterbrush (*Purshia tridentata*), big sagebrush (*Artemisia tridentata*), and narrow mule's ear (*Wyethia angustifolia*) will be planted as cover vegetation in upland habitat. A grass seed mix consisting of basin wildrye, Idaho fescue, Sandburg bluegrass (*Poa sandbergii*), and bluebunch wheatgrass (*Pseudordegneria spicata)* shall be broadcast between upland shrubs at a rate of application of 8 pounds per acre.

Areas where additional construction is scheduled to occur in later phases of the project will be planted with a grass seed mix of thickspike wheatgrass (*Elymus lanceolatus*), tufted hairgrass (*Deschampsia cespitosa*), basin wildrye (*Elymus cinereus*), Idaho fescue (*Festuca idahoensis*), fowl mannagrass (*Glyceria striata*), Sandburg bluegrass (*Poa sandbergii*), and bluebunch wheatgrass (*Pseudordegneria spicata*) at a rate of application of 8 pounds per acre to stabilize the soil.

4.2 CONSTRUCTION SCHEDULE

Project construction will begin in March of 2012 and be completed by the end of June 2013. Work will begin with the implementation of an Erosion and Sediment Control Plan, consisting of Best Management Practices (BMPs). BMPs will include straw wattles along the OHWM of the Columbia River. Site and initial off-channel grading, landscaping, and trail building will occur in the late summer/fall of 2012 using conventional construction equipment.

4.3 CONSTRUCTION METHODS

The proposed project will require the use of standard construction equipment, including excavators, bulldozers, dump trucks, and water trucks (for control of dust). Clearing and grubbing activities and installation of sedimentation control devices may require the use of excavators, stump grinders, and chipping equipment. Construction will be phased to reduce the amount of soil exposed at any one time, and the use of temporary straw wattles will minimize off-site migration of soils into the Columbia River. To control noise, construction equipment will be outfitted with mufflers and all activities will be conducted Monday through Friday during normal working hours (between 7 AM to 5 PM). Removal of mature trees will be limited to those needed to construct the project. Exposed soil will be seeded, covered with plastic, or otherwise maintained to minimize erosion. The mowing of ditches and cleaning out sediment accumulation are the only required maintenance.

4.4 CONSERVATION MEASURES/BEST MANAGEMENT PRACTICES

The following conservation measures protect and minimize the impact to aquatic species and their habitat:

- **Work Timing Window:** Activities that do not involve instream work can occur any time nesting or foraging bald eagles are not likely to be present, but the timing of the project provides that these activities will occur during the dry season of the year.

- **Ute Ladies'-Tresses:** Orange fencing will be placed to protect known locations of ladies'-tresses, and selective grubbing will be adjusted to avoid any additional plants documented during planned surveys in August and September of 2011.

- **Obtain Local Permits:** The project will obtain and comply with the terms and conditions of applicable state and federal permits; i.e. NPDES General Permit for Stormwater Discharges from Construction Activities, and Seattle District Office of U.S. Army Corps of Engineers Sections 404 and 10 permits.

- **Sediment Control:** Erosion and sediment control Best Management Practices (BMPs) will be used to select, implement, maintain, and removal appropriate temporary and permanent erosion and sediment controls during restoration. Contractors will implement and utilize an approved Soil Erosion and Sedimentation Control Plan to prevent accelerated erosion and off-site migration of soil from occurring during construction and restoration efforts. The BMPs include but are not limited to:

  - Temporary Erosion Control Practices
    - Straw wattles
    - Stabilized construction entrances
    - If the off-channel area requires dewatering during construction, dewatered liquids will be filtered through grassy fields prior to discharge to the Columbia River
    - Dust Control
    - Spill Prevention
    - Marking Construction Limits and protecting existing vegetation beyond construction limits
  - Permanent Erosion and Sediment Control
    - Permanent vegetative plantings and seeding
    - Protective fencing in place until vegetation established
    - Maintenance of vegetation, minor erosion that may occur following high rainfall or snow melt.

- **Spill Prevention Control:** Construction contractors will be required to implement and utilize an approved Spill Prevention, Containment, and Countermeasures Plan (SPCC) for spill prevention and containment.

  - Spill kits will be readily available.
  - The contractor and crew will be trained in spill prevention and containment techniques.
  - Clean and well-maintained equipment and tools will be used.

- **Stormwater Pollution Prevention Plan:**

- Contractors will develop and implement an approved Stormwater Pollution Prevention Plan prior to initiating construction activities.

- **Preservation of Existing Vegetation:**
  - Existing native vegetation will not be disturbed outside of the construction area.
- **Visual Monitoring:**
  - A construction supervisor will monitor the entire construction process.
- **Clean-up:**
  - All debris or deleterious material resulting from construction shall be removed from the construction area and disposed of at an authorized site.
  - Construction related debris shall not be dumped or allowed to enter the stream channel or floodway.

The following conservation measures meet additional criteria for the culvert removal categories of restoration actions covered by the July 8, 2008 Biological Opinion for the Washington State Fish Passage and Habitat Enhancement Restoration Programmatic Consultation (NMFS and USFWS 2008).

Culvert Removal

The following conservation measures are required for culvert removal during Phase 4. Prescriptions for habitat restoration projects are covered under the July 8, 2008 Biological Opinion for the Washington State Fish Passage and Habitat Enhancement Restoration Programmatic Consultation (NMFS and USFWS 2008). The conservation prescriptions in Appendix D will be followed during the burial or removal of the culvert in the abandoned channel swale.

5.0 EXISTING ENVIRONMENTAL CONDITIONS

5.1 BEEBE SPRINGS CREEK WATERSHED AND THE COLUMBIA RIVER NEARSHORE HABITAT IN PROJECT VICINITY

An engineering geological evaluation was done by Nelson Geotechnical Associates, Inc. in 2005 (NGA 2005). The site consists of Quaternary glacial outwash deposits (Qgo) and Quaternary alluvium (Qa) and has a slope of approximately 4 to 5 percent from Highway 97 towards the Columbia River. Topsoil ranges from 0.2 to 1 feet in depth with an average depth of 0.4 foot. Sandy silt underlies the topsoil from depths of 0.4 to 3.6 feet, and 2 to 12 feet of gravel and sand with varying amounts of cobbles and silt occur below the sandy silt. The sand, gravel, and silt was encountered at an average depth of 3.5 feet and continued to test pit termination at depths of 11 to 14 feet. Groundwater was encountered at depths ranging from 9 to 13 feet, which corresponds to the normal water surface elevation of the Columbia River, which is at an elevation of approximately 707.5 feet.

The Columbia River in the project vicinity is impounded by Rocky Reach Dam to form the Columbia River. The Columbia River extends from RM 473.7 at Rocky Reach Dam, upstream to the tailrace of Wells Dam at RM 515.6. The project area is located where Beebe Springs Creek flows into the Columbia River at approximately RM 504.5, about three quarters of the way upstream between Rocky Reach and Wells Dams. The Beebe Springs were formed as a result of the 1872 earthquake that induced the Ribbon Cliffs landslide and formed a geyser at the base of base of the Chelan moraine (Hackenmiller 1995, Kerr 1980), which eventually subsided into two springs (North and South Beebe Springs) and Beebe Springs Creek. The project area was part of an orchard operation before being obtained by the WDFW. The orchard operation virtually eliminated native upland habitat, and riparian habitat was reduced by conversion to orchard and degraded by introduced non-native plants. Prior to inundation by Rocky Reach Dam, this section of Columbia River shoreline contained a greater variety of habitat features, including sandbars, backwater channels, and a greater variation of water depth and velocities. Today, the shoreline is a homogeneous stretch of shallow water that lacks the complexity to support a diversity of fish and wildlife.

The design water level for the site is 707.5 feet. A severe flood event is expected to result in water elevations at approximately 715 feet. Extreme lows may include site water levels at elevation 703. Extreme highs and lows are not expected to be frequent or last very long, therefore they were considered in the design but not used for daily design conditions.

6.0 LISTED ESA SPECIES INFORMATION

The Endangered Species Act Status of West Coast Salmon & Steelhead lists the upper Columbia River spring-run Chinook salmon ESU as endangered and the upper Columbia River steelhead DPS as threatened. Of the species listed in the U.S. Fish and Wildlife Service (USFWS) list of listed and proposed endangered and threatened species and critical habitat, candidate species, and species of concern in Chelan County, Washington , only Ute ladies'-tresses and bull trout have been documented to occur in the project action area. The remaining four species (grizzly bear, Canada lynx, marbled murrelet, and spotted owl) are unlikely to occur in the project action area due to a lack of suitable habitat, distance from suitable habitat, or lack of migratory corridors to known populations. Critical habitat has been designated for the Chinook salmon ESU, steelhead trout DPS, and the bull trout CHU. A list of all ESA species and updated critical habitat present in the project Action Area is provided in Appendix A.

7.0 ESA EFFECTS ANALYSIS

7.1 EFFECTS TO CRITICAL HABITAT

7.1.1 Bull Trout

Critical habitat for Bull Trout has been designated in the proposed project action area subsequent to the submittal of the Phase 3 BA. On October 18 2010, the U.S. Fish and Wildlife Service designated critical habitat for bull trout throughout their U.S. range (USFWS 2010). The Mainstem Upper Columbia River Critical Habitat Unit (CHU) 22 is part of the Mid-Columbia Recovery Unit. This unit consists of 520.1 km (323.2 mi) of streams and is located in central Washington. The Mainstem Upper Columbia River CHU includes the Columbia River from John Day Dam upstream 520.1 km (323.2 mi) to Chief Joseph Dam. The Mainstem Upper Columbia River CHU supports FMO habitat for fluvial bull trout; several accounts exist of bull trout in the Columbia River between the Yakima and John Day rivers. The Mainstem Upper Columbia River CHU provides connectivity to the Mainstem Lower Columbia River CHU and 13 additional CHUs. The Mainstem Upper Columbia River CHU is located in north-central, central, and south-central Washington and north-central and northeast Oregon.

The October 18, 2010 rule designating critical habitat for the upper Columbia River Bull Trout CHU defined the lateral extent of critical habitat for each designated stream reach as the width of the stream channel as defined by its bankfull elevation. Bankfull elevation is reached at a discharge which generally has a recurrence interval of 1 to 2 years on the annual flood series. If bankfull elevation is not evident on either bank, the ordinary high-water line determines the lateral extent of critical habitat. Critical habitat in lake or reservoir areas, such as the Columbia River, is defined by the perimeter of the water body displayed on standard 1:24,000 scale topographic maps or the elevation of ordinary high water, whichever is greater. Adjacent floodplains are not designated as critical habitat. However human activities and actions that may adversely affect the habitat, potentially including activities on lands adjacent to or upstream of designated stream bed and banks that occur outside the lateral extent of critical habitat have the potential to have demonstrable effects on physical and biological features of critical habitat in designated reaches.

<u>Action Area Primary Constituent Elements</u>

The October 18, 2010 final rule designating critical habitat for Upper Columbia River bull trout identified nine primary constituent elements (USFWS 2010). These nine primary constituent elements (PCEs) are designed to incorporate what is essential for the conservation of Upper Columbia River bull trout within the specified sub-basins and may require special management considerations or protection. All lands identified as essential and designated as critical habitat contain one or more of the primary constituent elements for Upper Columbia bull trout. The PCEs that were determined to be essential to the conservation of Upper Columbia River bull trout are defined in 75FR 63931. An assessment of the PCEs was completed in part to identify construction methods that can be changed or altered to reduce the impact on PCEs. The PCEs for Upper Columbia River bull trout are:

1. Springs, seeps, groundwater sources, and subsurface water connectivity (hyporheic flows) to contribute to water quality and quantity and provide thermal refugia.

2. Migration habitats with minimal physical, biological, or water quality impediments between spawning, rearing, overwintering, and freshwater and marine foraging habitats, including but not limited to permanent, partial, intermittent, or seasonal barriers.

3. An abundant food base, including terrestrial organisms of riparian origin, aquatic macroinvertebrates, and forage fish.

4. Complex river, stream, lake, reservoir, and marine shoreline aquatic environments, and processes that establish and maintain these aquatic environments, with features such as large wood, side channels, pools, undercut banks and unembedded substrates, to provide a variety of depths, gradients, velocities, and structure.

5. Water temperatures ranging from 2 to 15 °C (36 to 59 °F), with adequate thermal refugia available for temperatures that exceed the upper end of this range. Specific temperatures within this range will depend on bull trout life-history stage and form; geography; elevation; diurnal and seasonal variation; shading, such as that provided by riparian habitat; streamflow; and local groundwater influence.

6. In spawning and rearing areas, substrate of sufficient amount, size, and composition to ensure success of egg and embryo overwinter survival, fry emergence, and young-of-the-year and juvenile survival. A minimal amount of fine sediment, generally ranging in size from silt to coarse sand, embedded in larger substrates, is characteristic of these conditions. The size and amounts of fine sediment suitable to bull trout will likely vary from system to system.

7. A natural hydrograph, including peak, high, low, and base flows within historic and seasonal ranges or, if flows are controlled, minimal flow departure from a natural hydrograph.

8. Sufficient water quality and quantity such that normal reproduction, growth, and survival are not inhibited.

9. Sufficiently low levels of occurrence of nonnative predatory (e.g., lake trout, walleye, northern pike, smallmouth bass); interbreeding (e.g., brook trout); or competing (e.g., brown trout) species that, if present, are adequately temporally and spatially isolated from bull trout.

8.0 DETERMINATION OF EFFECT

The NMFS/USFWS matrix (Appendix A) in the original BA submitted in May 2010, in addition to a review of the Phase 4 project design, the BMPs to be implemented during construction, the

existing conditions of the Columbia River, the literature review, and the species information obtained from federal and state agencies were used to establish the following findings of effects for new designated critical habitat for Bull Trout.

Based on the known timing of foraging and migration of bull trout in the upper Columbia River, it is possible, but unlikely that any bull trout would be present in the river at the time of construction activities. The Phase 4 construction impacts will occur above the OHWM and at a time when bull trout are not present, and the functionality of the run-off channel will be restored before migrating or foraging bull trout arrive in the project action area. The project will not result in significant construction related water quality or disturbance effects. The measures proposed to minimize inwater disturbance will avoid effects of sedimentation to adjacent and downstream migration habitat. The project action will not affect the function of the Columbia River, in the area adjacent to the project, as a migration corridor. Based on the unlikely presence of bull trout during project construction, and effects to bull trout being limited to the effect of runoff during construction activities, the project "***may affect, but is not likely to adversely affect***" bull trout critical habitat. The effects determination has not changed as a result of the new critical habitat designation subsequent to the submittal of the Phase 3 BA, as noted in Table 8-1.

Table 8-1
Change of Effects Determination of Critical Habitat in the Action Area Subsequent to BA submittal

	May 2010 BA Submittal		Current	
Species	**Critical Habitat Status**	**Effects Determination**	**Critical Habitat Status**	**Effects Determination**
Bull Trout	The Columbia River is proposed as designated critical habitat for bull trout.	Will not destroy or adversely modify/not likely to adversely affect	The Columbia River is designated critical habitat for upper Columbia River bull trout CHU.	Will not destroy or adversely modify/not likely to adversely affect

9.0 LITERATURE CITED

BioAnalysts, Inc. 2000a. Effects of pool fluctuations on natural resources in the Rocky Reach project area. Prepared by BioAnalysts, Inc., Boise, Idaho for Public Utility District No. 1 of Chelan County, Wenatchee, Washington.

DESI (Duke Engineering & Services, Inc.). 2001a. Rocky Reach fish presence and habitat use survey. Prepared by Duke Engineering & Services, Inc., Bellingham, Washington for Public Utility District No. 1 of Chelan County, Wenatchee, Washington.

———. 2001b. Aquatic habitat mapping study report. Prepared by Duke Engineering & Services, Inc., Bellingham, Washington for Public Utility District No. 1 of Chelan County, Wenatchee, Washington.

Erkel, Tim. 2007. Personal communication between Tim Erkel (USACE Eastern Washington Coordinator) and Carla Talich (URS Corporation Engineer/Project Manager) on February 7, 2007.

Federal Register. 1986. 50 CFR, Part 402. Interagency Cooperation-Endangered Species Act of 1973, as Amended; Final Rule. Volume 51, No. 106, June 3, 1986. page 19958.

Hackenmiller, T. 1995. Wapato Heritage: The History of the Chelan and Entiat Indians. Point Publishing Press, Manson, Washington.

Kerr, C.C. 1980. The World of the World: From Frontier to Community 1905-1980. The Wenatchee World, Wenatchee, Washington.

NGA (Nelson Geotechnical Associates, Inc.). 2005. Engineering Geologic Evaluation of the Beebe Springs Creek Design Project, Chelan County, Washington. Prepared for The Watershed Company. NGA file number 410105.

NMFS and USFWS. 2008. Endangered Species Act Section 7 consultation Biological Opinion and Magnuson-Stevens Fishery Conservation and Management Act Essential Fish Habitat consultation, Washington State fish passage and habitat enhancement restoration programmatic consultation. National Marine Fisheries Service, Lacey, Washington and U.S. Fish and Wildlife Service, Lacey, Washington.

URS (URS Corporation). 2007. Wetland delineation and impacts report, Beebe Springs Natural Area—Phase 2, Chelan County, Washington. Prepared for the Washington Department of Fish and Wildlife by URS Corporation, Seattle, Washington in association with J.A. Brennan & Associates, Seattle, Washington.

USFWS (U.S. Fish and Wildlife Service). 2010. Revised designation of critical habitat for bull trout in the coterminous United States. Final Rule. In Federal Register. Vol. 75, No. 200/ October 18, 2010, pages 63898-64070.

APPENDIX A

PHASE 3 BA ESA PATHWAYS AND INDICATORS AND EFFECTS DETERMINATION TABLES

Table A-1
NMFS and USFWS Checklist for Documenting the Environmental Baseline of the Beebe Springs Creek Watershed and the Effects of the Beebe Springs Natural Area Development Phase 3 Project on Chinook, Steelhead, and Bull Trout Pathways and Indicators

Pathways	Population and Environmental Baseline			Effects of the Action(s)		
Indicators	**Properly Functioning**	**at Risk**	**Not Properly Functioning**	**Restore**	**Maintain**	**Degrade**
Subpopulation Characteristics*						
Subpopulation Size		X			X	
Growth and Survival		X			X	
Life History Diversity and Isolation		X			X	
Persistence and Genetic Integrity		X			X	
Water Quality						
Temperature	X				X	
Sediment		X		X (long-term)		
Chemical Contamination-Nutrients	X				X	
Habitat Access						
Physical Barriers		X		X		
Habitat Elements						
Substrate Embeddedness	X				X	
Large Woody Debris	X			X		
Pool Frequency and Quality	X				X	
Large Pools	X				X	
Off-Channel Habitat	X				X	
Refugia	X				X	
Channel Conditions and Dynamics						
Wetted Width/ Max Depth Ratio	X				X	
Streambank Condition	X (long-term)	X (short-term)			X	
Floodplain Connectivity	X				X	

Pathways	Population and Environmental Baseline			Effects of the Action(s)		
Indicators	**Properly Functioning**	**at Risk**	**Not Properly Functioning**	**Restore**	**Maintain**	**Degrade**
Flow/Hydrology						
Change in Peak/Base Flow	X				X	
Increase in Drainage Network		X			X	
Watershed Conditions						
Road Density and Location			X		X	
Disturbance History		X			X	
Riparian Conservation Areas		X (long-term)	X (short-term)	X		
Species and Habitat*						
Integration of Species and Habitat Conditions		X			X	

* The indicators for these pathways are based on the bull trout populations utilizing Beebe Springs Creek as foraging habitat.

Table A-2
NMFS and USFWS Checklist for Documenting the Environmental Baseline of the Columbia River Nearshore Habitat in the Vicinity of the Beebe Springs Natural Area Development Phase 3 Project on Chinook, Steelhead, and Bull Trout Pathways and Indicators

Pathways	Population and Environmental Baseline			Effects of the Action(s)		
Indicators	**Properly Functioning**	**at Risk**	**Not Properly Functioning**	**Restore**	**Maintain**	**Degrade**
Subpopulation Characteristics*						
Subpopulation Size		X			X	
Growth and Survival		X			X	
Life History Diversity and Isolation		X			X	
Persistence and Genetic Integrity		X			X	
Water Quality						
Temperature		X			X	
Sediment**	X				X (long-term)	X (temp)
Chemical Contamination-Nutrients	X				X	
Habitat Access						
Physical Barriers		X		X		
Habitat Elements						
Substrate Embeddedness**		X			X	
Large Woody Debris			X	X		
Pool Frequency and Quality**			X		X	
Large Pools**			X		X	
Off-Channel Habitat		X		X		
Refugia		X		X		
Channel Conditions and Dynamics						
Wetted Width/ Max Depth Ratio**			X		X	
Streambank Condition**	X				X	
Floodplain Connectivity	X				X	

Pathways	Population and Environmental Baseline			Effects of the Action(s)		
Indicators	**Properly Functioning**	**at Risk**	**Not Properly Functioning**	**Restore**	**Maintain**	**Degrade**
Flow/Hydrology						
Change in Peak/Base Flow**			X		X	
Increase in Drainage Network **	X				X	
Watershed Conditions						
Road Density and Location			X		X	
Disturbance History		X			X	
Riparian Conservation Areas		X (long-term)	X (short-term)	X		
Species and Habitat*						
Integration of Species and Habitat Conditions		X			X	

* The indicators for these pathways are based on the bull trout populations utilizing the Columbia River as foraging habitat.

** Although some current exists in the project vicinity, the nearshore habitat is composed of former Columbia River floodplain with the original river channel on the other bank.

Table A-3
Phase 3 BA ESA Effects Determination

Species*	ESA Status	Jurisdiction	Effects – Construction	Effects – Long Term	Effects to Critical Habitat
Chinook Salmon *(Oncorhynchus tshawytscha)*	Endangered	NMFS	May affect, not likely to adversely affect	Beneficial-Creation of side channel habitat & revegetation of riparian zone	May affect, not likely to adversely affect
Steelhead Trout *(Oncorhynchus mykiss)*	Threatened	NMFS	May affect, not likely to adversely affect	Beneficial- Creation of side channel habitat & revegetation of riparian zone	May affect, not likely to adversely affect
Bull Trout *(Salvelinus confluentus)*	Threatened	USFWS	May affect, not likely to adversely affect	Beneficial- Creation of side channel habitat & revegetation of riparian zone	Will not destroy or adversely modify/not likely to adversely affect proposed critical habitat
Ute Ladies'-Tresses *(Spiranthes diluvialis)*	Threatened	USFWS	May affect, not likely to adversely affect	Beneficial-Creation of side channel wetland habitat	Critical habitat has not been designated

APPENDIX B

BEEBE SPRINGS PHASE 4 SITE PHOTOGRAPHS

Figure B-1. View of Phase 4 site looking upstream (north).

Figure B-2. View looking north - Phase 4 inundated shoreline at future viewpoint site.

Figure B-3. View, looking east from highway towards the Columbia River, at the new channel swale site that will be excavated through the shrub steppe landscape site.

APPENDIX C

PROJECT PLANS AND CONCEPT DRAWINGS

Beebe Springs Natural Area Phase 4

List of Sheets:

1 Site Vicinity Maps
2 Existing Conditions
3 Demo, Clearing and Grubbing, TESC
4 Layout, Grading, and Planting Plans
5 Plant List and Details
6 Site Feature Details
7 Channel Plan and Details
8 Section at Existing Culvert

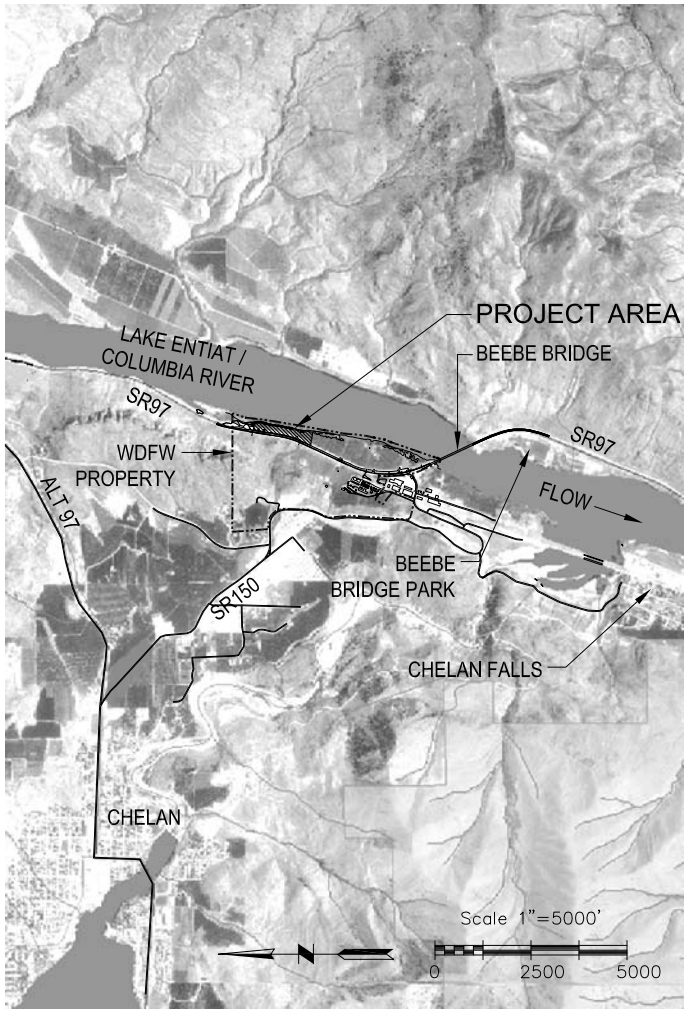

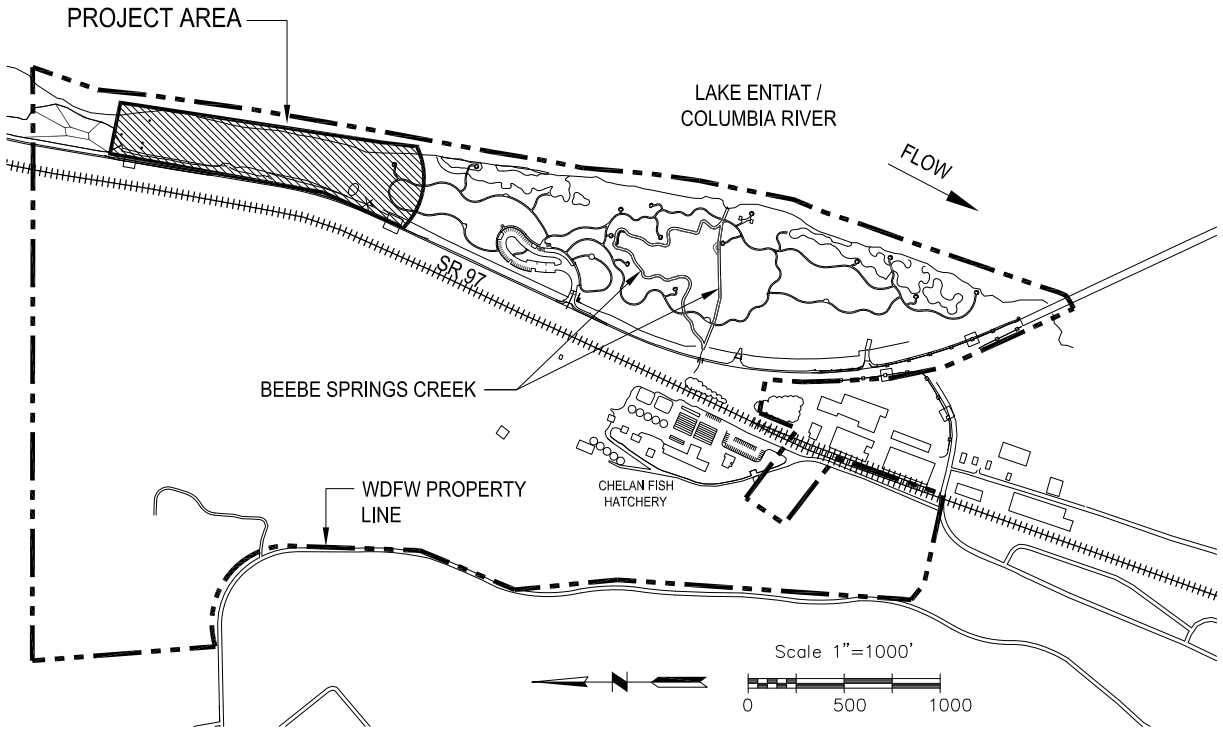

PURPOSE: DEVELOP A NATURAL AREA THAT WILL INCLUDE SALMON AND WILDLIFE ENHANCMENT/ RESTORATION AREAS AND TRAILS

DATUM: NGVD 29

ADJACENT PROPERTY OWNERS: WSDOT, Chelan County PUD, DNR

LATITUDE: 47° 49' 14" N
LONGITUDE: 119° 58' 20" W

WASHINGTON DEPARTMENT OF FISH AND WILDLIFE

BEEBE SPRINGS NATURAL AREA PHASE 4

REFERENCE #:

ADDRESS: SR 97
Chelan, WA 98816

SHEET 1 **OF 8:** SITE VICINITY MAPS

PROPOSED: BEEBE SPRINGS NATURAL AREA PHASE 4
IN: CHELAN COUNTY
AT: CHELAN FISH HATCHERY
COUNTY OF: CHELAN **STATE:** WA
APPL. BY: WASHINGTON DEPARTMENT OF FISH AND WILDLIFE
DATE: JUNE 30, 2011
REVISED:

PREPARED BY:
J.A. BRENNAN ASSOCIATES, PLLC

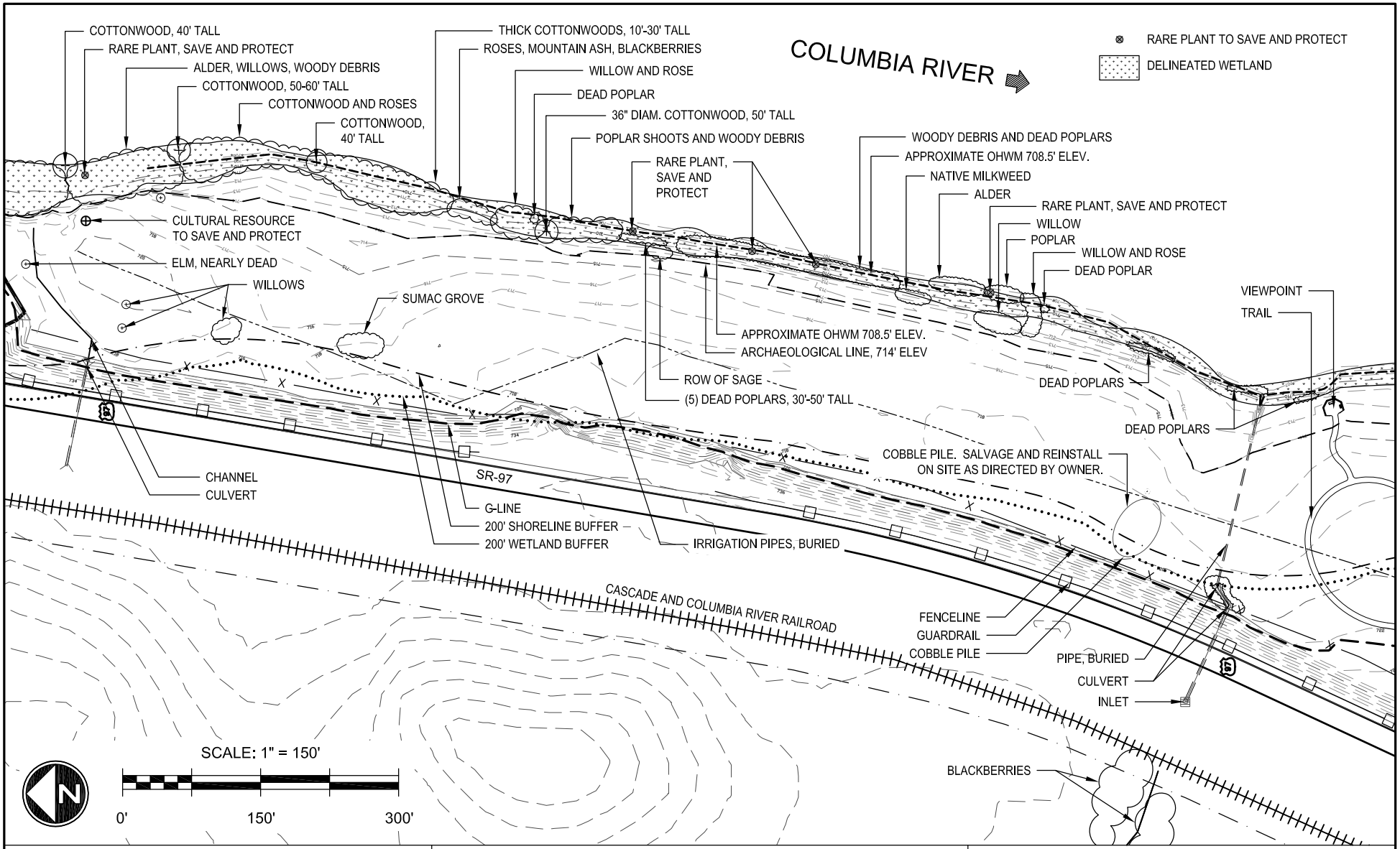

PURPOSE: DEVELOP A NATURAL AREA THAT WILL INCLUDE SALMON AND WILDLIFE ENHANCMENT/ RESTORATION AREAS AND TRAILS

DATUM: NGVD 29

ADJACENT PROPERTY OWNERS: WSDOT, Chelan County PUD, DNR

LATITUDE: 47° 49' 14" N
LONGITUDE: 119° 58' 20" W

WASHINGTON DEPARTMENT OF FISH AND WILDLIFE

BEEBE SPRINGS NATURAL AREA PHASE 4

REFERENCE #:

ADDRESS: SR 97
Chelan, WA 98816

SHEET 2 **OF 8:** EXISTING CONDITIONS

PROPOSED: BEEBE SPRINGS NATURAL AREA PHASE 4
IN: CHELAN COUNTY
AT: CHELAN FISH HATCHERY
COUNTY OF: CHELAN **STATE:** WA
APPL. BY: WASHINGTON DEPARTMENT OF FISH AND WILDLIFE
DATE: JUNE 30, 2011
REVISED:

PREPARED BY:
J.A. BRENNAN ASSOCIATES, PLLC

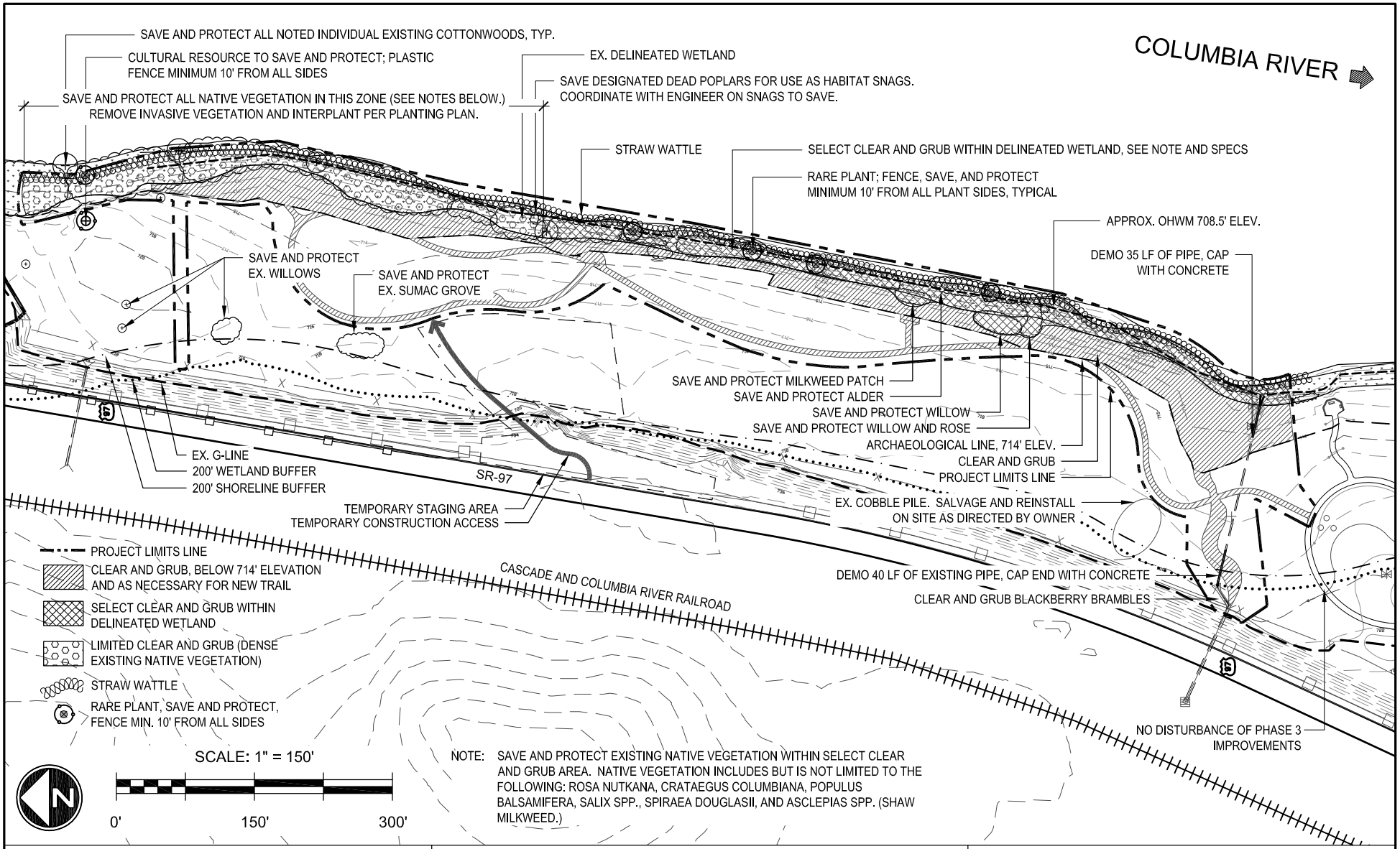

NOTE: SAVE AND PROTECT EXISTING NATIVE VEGETATION WITHIN SELECT CLEAR AND GRUB AREA. NATIVE VEGETATION INCLUDES BUT IS NOT LIMITED TO THE FOLLOWING: ROSA NUTKANA, CRATAEGUS COLUMBIANA, POPULUS BALSAMIFERA, SALIX SPP., SPIRAEA DOUGLASII, AND ASCLEPIAS SPP. (SHAW MILKWEED.)

PURPOSE: DEVELOP A NATURAL AREA THAT WILL INCLUDE SALMON AND WILDLIFE ENHANCMENT/ RESTORATION AREAS AND TRAILS

DATUM: NGVD 29

ADJACENT PROPERTY OWNERS: WSDOT, Chelan County PUD, DNR

LATITUDE: 47° 49' 14" N
LONGITUDE: 119° 58' 20" W

WASHINGTON DEPARTMENT OF FISH AND WILDLIFE

BEEBE SPRINGS NATURAL AREA PHASE 4

REFERENCE #:

ADDRESS: SR 97
Chelan, WA 98816

SHEET 3 **OF 8:** DEMO, CLEARING AND GRUBBING, TESC

PROPOSED: BEEBE SPRINGS NATURAL AREA PHASE 4
IN: CHELAN COUNTY
AT: CHELAN FISH HATCHERY
COUNTY OF: CHELAN **STATE:** WA
APPL. BY: WASHINGTON DEPARTMENT OF FISH AND WILDLIFE
DATE: JUNE 30, 2011
REVISED:

PREPARED BY:
J.A. BRENNAN ASSOCIATES, PLLC

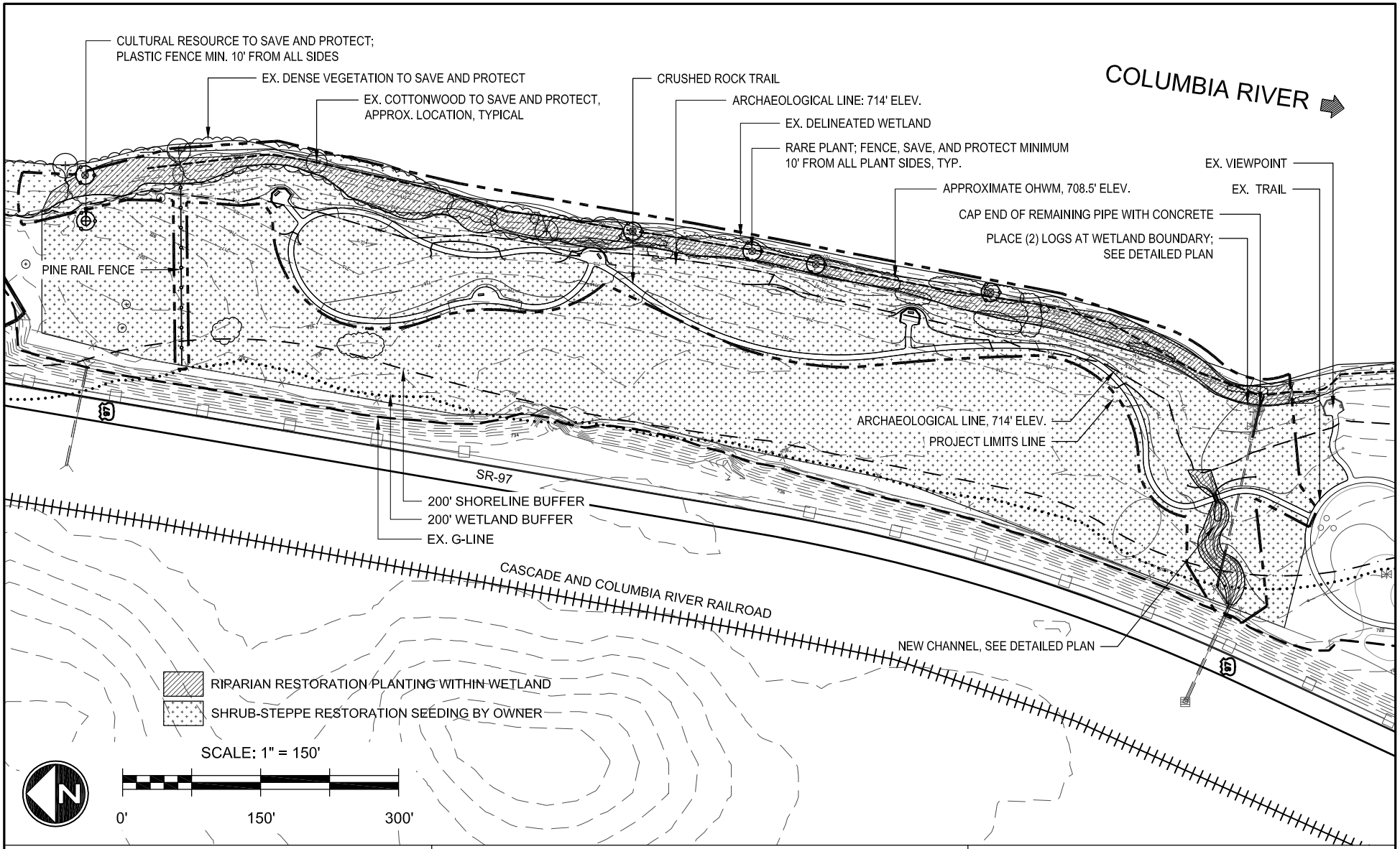

PURPOSE: DEVELOP A NATURAL AREA THAT WILL INCLUDE SALMON AND WILDLIFE ENHANCMENT/ RESTORATION AREAS AND TRAILS

DATUM: NGVD 29

ADJACENT PROPERTY OWNERS: WSDOT, Chelan County PUD, DNR

LATITUDE: 47° 49' 14" N
LONGITUDE: 119° 58' 20" W

WASHINGTON DEPARTMENT OF FISH AND WILDLIFE

BEEBE SPRINGS NATURAL AREA PHASE 4

REFERENCE #:

ADDRESS: SR 97
Chelan, WA 98816

SHEET 4 **OF 8:** LAYOUT, GRADING, AND PLANTING PLANS

PROPOSED: BEEBE SPRINGS NATURAL AREA PHASE 4
IN: CHELAN COUNTY
AT: CHELAN FISH HATCHERY
COUNTY OF: CHELAN **STATE:** WA
APPL. BY: WASHINGTON DEPARTMENT OF FISH AND WILDLIFE
DATE: JUNE 30, 2011
REVISED:

PREPARED BY:
J.A. BRENNAN ASSOCIATES, PLLC

TREES

SYMBOL	QNTY	BOTANICAL NAME	COMMON NAME
AG	19	ACER GLABRUM DOUGLASII	DOUGLAS MAPLE
AI	18	ALNUS INCANA	MOUNTAIN ALDER
BO	17	BETULA OCCIDENTALIS	WATER BIRCH
CC	11	CRATAEGUS COLUMBIANA	COLUMBIA HAWTHORN
PP	19	PINUS PONDEROSA	PONDEROSA PINE
PT	24	POPULUS TRICHOCARPA	BLACK COTTONWOOD
SA	25	SALIX AMYGDALOIDES	PEACHLEAF WILLOW

LARGE SHRUBS

SYMBOL	QNTY	BOTANICAL NAME	COMMON NAME
AA	108	AMELANCHIER ALNIFOLIA	SERVICEBERRY
CS	220	CORNUS SERICEA	RED TWIG DOGWOOD
PL	98	PHILADELPHUS LEWISII	MOCK ORANGE
PV	51	PRUNUS VIRGINIANA	CHOKECHERRY
RG	83	RHUS GLABRA	SMOOTH SUMAC
SE	1034	SALIX EXIGUA	SANDBAR/COYOTE WILLOW
SL	632	SALIX LASIANDRA	PACIFIC WILLOW
SS	708	SALIX SCOULERIANA	SCOULER'S WILLOW

SMALL SHRUBS

SYMBOL	QNTY	BOTANICAL NAME	COMMON NAME
MA	49	MAHONIA AQUIFOLIUM	TALL OREGON GRAPE
RA	82	RIBES AUREUM	GOLDEN CURRANT
RC	141	RIBES CEREUM	WAX CURRANT
RN	672	ROSA NUTKANA	NOOTKA ROSE
RW	195	ROSA WOODSII	WOODS' ROSE
SAL	27	SYMPHORICARPOS ALBUS	SNOWBERRY

RIPARIAN SEED MIX

BOTANICAL NAME	COMMON NAME	PERCENTAGE BY WEIGHT
HORDEUM BRACHYANTHERUM	MEADOW BARLEY	**25%**
FESTUCA RUBRA	NATIVE RED FESCUE	**25%**
DESCHAMPSIA CESPITOSA SSP. BERINGENIS	TUFTED HAIRGRASS	**10%**
AGROPYRON RIPARIAN	STREAMBANK WHEATGRASS	**20%**
BROMUS CARINATUS aka B. MARGINATUS	CALIFORNIA BROME	**20%**

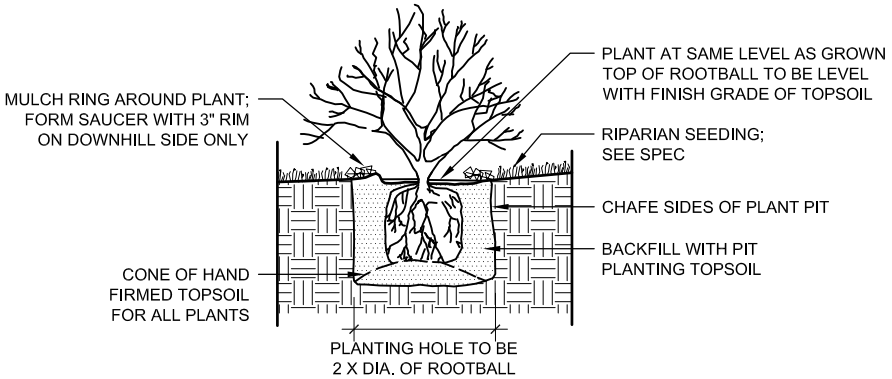

A SHRUB AND TREE PLANTING

NOT TO SCALE

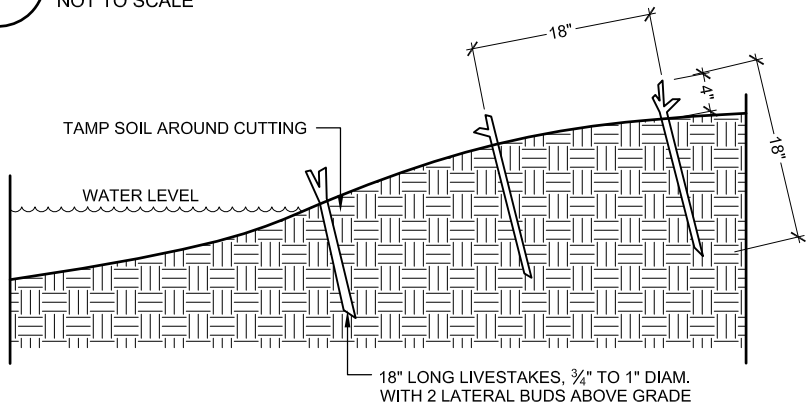

B LIVESTAKE PLANTING

NOT TO SCALE

PURPOSE: DEVELOP A NATURAL AREA THAT WILL INCLUDE SALMON AND WILDLIFE ENHANCMENT/ RESTORATION AREAS AND TRAILS

DATUM: NGVD 29

ADJACENT PROPERTY OWNERS: WSDOT, Chelan County PUD, DNR

LATITUDE: 47° 49' 14" N
LONGITUDE: 119° 58' 20" W

WASHINGTON DEPARTMENT OF FISH AND WILDLIFE

BEEBE SPRINGS NATURAL AREA PHASE 4

REFERENCE #:

ADDRESS: SR 97
Chelan, WA 98816

SHEET 5 **OF 8:** PLANT LIST AND DETAILS

PROPOSED: BEEBE SPRINGS NATURAL AREA PHASE 4
IN: CHELAN COUNTY
AT: CHELAN FISH HATCHERY
COUNTY OF: CHELAN **STATE:** WA
APPL. BY: WASHINGTON DEPARTMENT OF FISH AND WILDLIFE
DATE: JUNE 30, 2011
REVISED:

PREPARED BY:
J.A. BRENNAN ASSOCIATES, PLLC

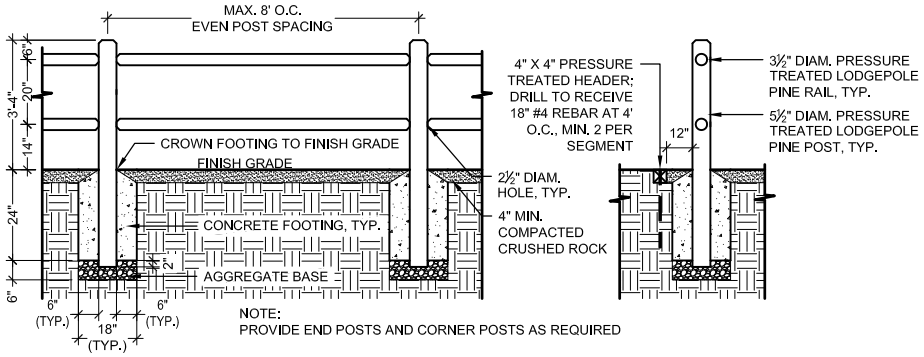

A PINE RAIL FENCE

NOT TO SCALE

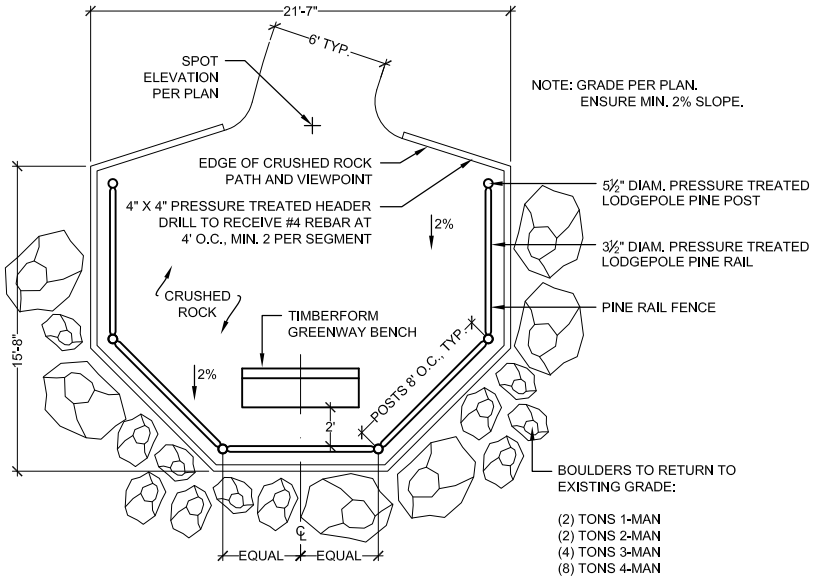

B VIEWPOINT PLAN

NOT TO SCALE

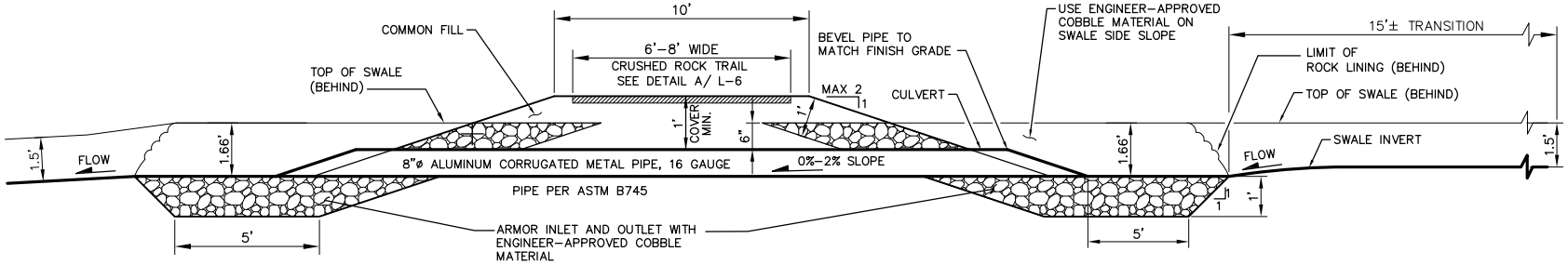

C CULVERT SECTION

NOT TO SCALE

PURPOSE: DEVELOP A NATURAL AREA THAT WILL INCLUDE SALMON AND WILDLIFE ENHANCMENT/ RESTORATION AREAS AND TRAILS

DATUM: NGVD 29

ADJACENT PROPERTY OWNERS: WSDOT, Chelan County PUD, DNR

LATITUDE: 47° 49' 14" N
LONGITUDE: 119° 58' 20" W

WASHINGTON DEPARTMENT OF FISH AND WILDLIFE

BEEBE SPRINGS NATURAL AREA PHASE 4

REFERENCE #:

ADDRESS: SR 97
Chelan, WA 98816

SHEET 6 **OF 8:** SITE FEATURE DETAILS

PROPOSED: BEEBE SPRINGS NATURAL AREA PHASE 4
IN: CHELAN COUNTY
AT: CHELAN FISH HATCHERY
COUNTY OF: CHELAN **STATE:** WA
APPL. BY: WASHINGTON DEPARTMENT OF FISH AND WILDLIFE
DATE: JUNE 30, 2011
REVISED:

PREPARED BY:
J.A. BRENNAN ASSOCIATES, PLLC

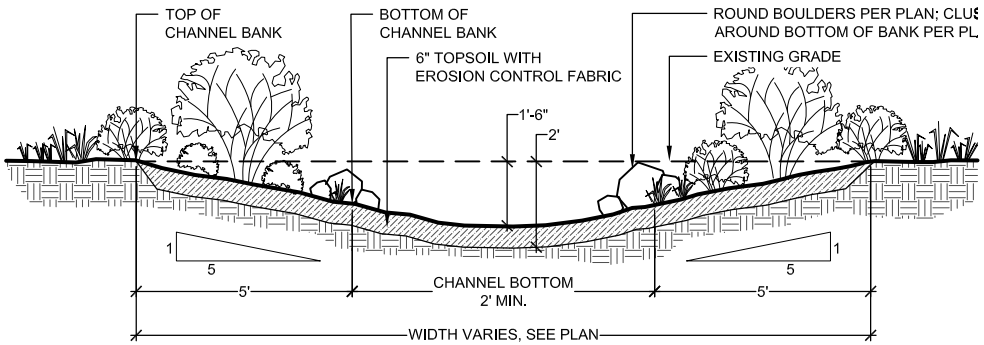

A CHANNEL SECTION, TYPICAL

NOT TO SCALE

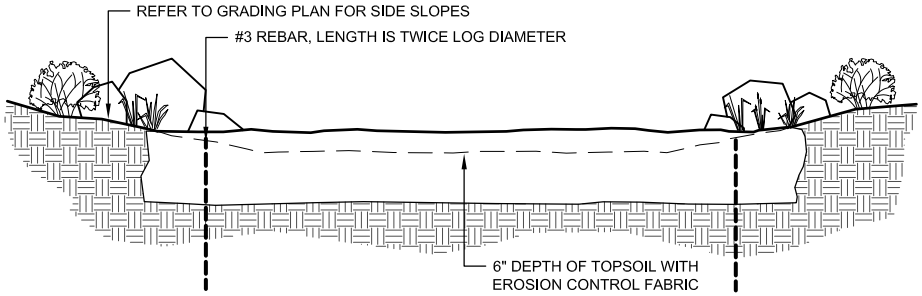

B SPREADER LOG

NOT TO SCALE

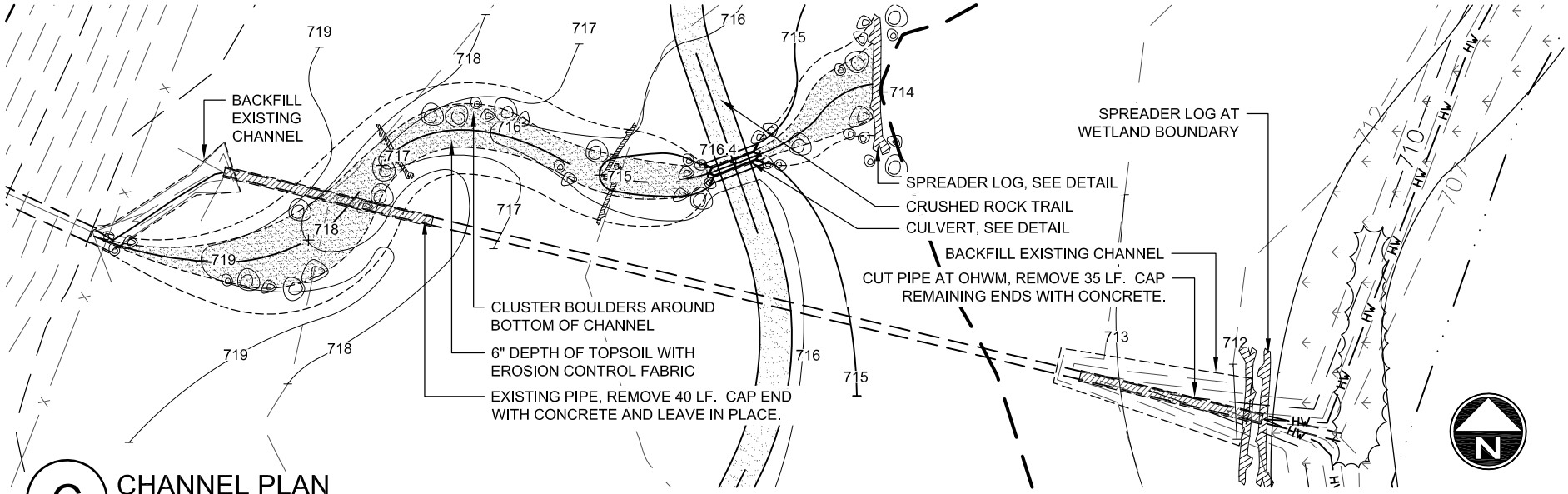

C CHANNEL PLAN

1" = 30'-0"

PURPOSE: DEVELOP A NATURAL AREA THAT WILL INCLUDE SALMON AND WILDLIFE ENHANCMENT/ RESTORATION AREAS AND TRAILS

DATUM: NGVD 29

ADJACENT PROPERTY OWNERS: WSDOT, Chelan County PUD, DNR

LATITUDE: 47° 49' 14" N
LONGITUDE: 119° 58' 20" W

WASHINGTON DEPARTMENT OF FISH AND WILDLIFE

BEEBE SPRINGS NATURAL AREA PHASE 4

REFERENCE #:

ADDRESS: SR 97
Chelan, WA 98816

SHEET 7 **OF 8:** CHANNEL PLAN AND DETAILS

PROPOSED: BEEBE SPRINGS NATURAL AREA PHASE 4
IN: CHELAN COUNTY
AT: CHELAN FISH HATCHERY
COUNTY OF: CHELAN **STATE:** WA
APPL. BY: WASHINGTON DEPARTMENT OF FISH AND WILDLIFE
DATE: JUNE 30, 2011
REVISED:

PREPARED BY:
J.A. BRENNAN ASSOCIATES, PLLC

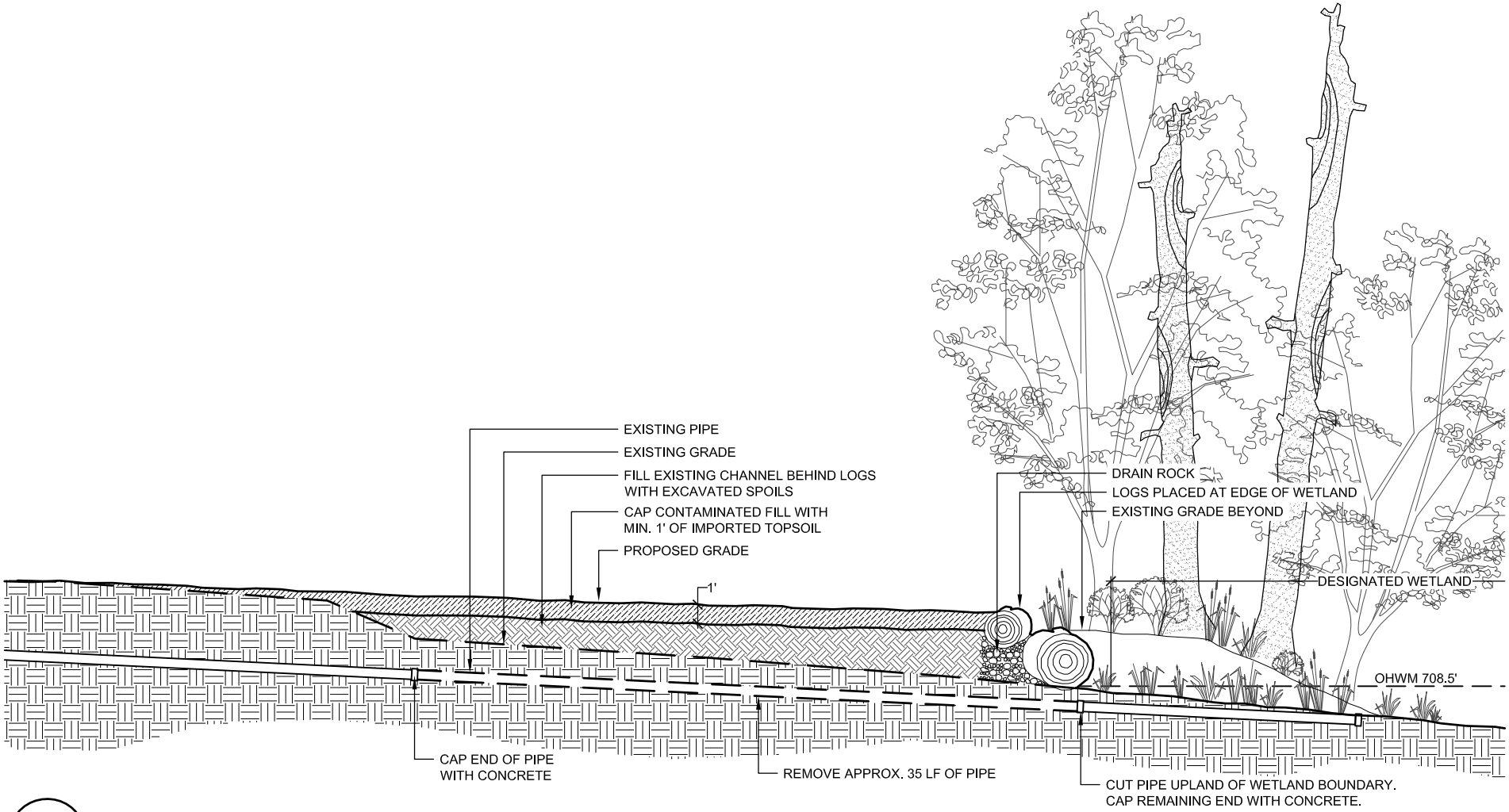

A SECTION AT EXISTING CULVERT

NOT TO SCALE

PURPOSE: DEVELOP A NATURAL AREA THAT WILL INCLUDE SALMON AND WILDLIFE ENHANCMENT/ RESTORATION AREAS AND TRAILS

DATUM: NGVD 29

ADJACENT PROPERTY OWNERS: WSDOT, Chelan County PUD, DNR

LATITUDE: 47° 49' 14" N
LONGITUDE: 119° 58' 20" W

WASHINGTON DEPARTMENT OF FISH AND WILDLIFE

BEEBE SPRINGS NATURAL AREA PHASE 4

REFERENCE #:

ADDRESS: SR 97
Chelan, WA 98816

SHEET 8 **OF 8:** SECTION AT EXISTING CULVERT

PROPOSED: BEEBE SPRINGS NATURAL AREA PHASE 4
IN: CHELAN COUNTY
AT: CHELAN FISH HATCHERY
COUNTY OF: CHELAN **STATE:** WA
APPL. BY: WASHINGTON DEPARTMENT OF FISH AND WILDLIFE
DATE: JUNE 30, 2011
REVISED:

PREPARED BY:
J.A. BRENNAN ASSOCIATES, PLLC

APPENDIX D

PRESCRIPTIONS THAT APPLY TO BEEBE SPRING CREEK CULVERT REMOVAL AND HABITAT ENHANCEMENT

General Prescriptions: These are general prescriptions of the 2008 BO.

General Prescriptions that Apply to all Proposed Restoration Activities:

No in-water activities are permitted in bull trout spawning and rearing areas in eastern Washington.

1. Pre-Construction/Surveying

1. All organic material that has to be cleared for access will remain on site.
2. The removal of riparian vegetation for access will be minimized and estimated in the Specific Project Information Form (SPIF) at the time the COE seeks to conduct the action.
3. The number of temporary access roads will be minimized and roads will be designed to avoid adverse effects like creating excessive erosion.
4. Temporary access-ways across slopes greater than 30 percent will be avoided. If temporary access needs to cross slopes greater than 30 percent it will be indicated in the SPIF.
5. No permanent access-ways will be built. All temporary access-ways will be removed (including gravel surfaces) and planted after project completion.
6. New temporary stream crossings will avoid potential spawning habitat (i.e. pool tailouts) and pools to the maximum extent possible. They will minimize sedimentation impacts by using best management practices like mats and boards to cross a stream. Best management practices will be listed by each applicant in a SPIF. After project completion temporary stream crossing will be abandoned and the stream channel restored where necessary.
7. Boundaries of clearing limits associated with site access and construction will be marked to avoid or minimize disturbance of riparian vegetation, wetlands, and other sensitive sites.
8. A Pollution and Erosion Control Plan, commensurate with the size of the project, must be prepared and carried out to prevent pollution caused by surveying or construction operations.
9. A supply of emergency erosion control materials will be on hand and temporary erosion controls will be installed and maintained in place until site restoration is complete.

2. General

1. Work windows will be applied to avoid and minimize impacts to listed salmonids or forage fish.
2. Electrofishing is not proposed in the vicinity of redds from which fry may not have emerged, or in areas where adult salmonids may be holding prior to spawning.
3. Sandbags may be placed to temporarily keep fish out of work areas. Sandbags will be removed after completion of project.
4. Temporary roads in wet or flooded areas will be abandoned and restored by the end of the in-water work period.
5. Existing roadways or travel paths will be used whenever possible.
6. Any large wood, native vegetation, weed-free topsoil, and native channel material displaced by construction will be stockpiled for use during site restoration.

7 When construction is finished, the construction area will be cleaned up and rehabilitated (replanted and reseeded) as necessary to renew ecosystem processes that form and maintain productive fish habitats.

8 Work below the OHWL or mean lower low tide line will be completed during preferred in-water work windows, when listed salmonids or forage fish are least likely to be present in the action area. Exceptions will be requested in the SPIF.

9 If listed fish are likely to be present, the project sponsor will assess what is less impacting to fish, isolation of the in-water work area or work in the wet, see below "6. Isolation of Work Site".

10 Prepare a Work Area Isolation Plan for all work below the bankfull elevation requiring flow diversion or isolation. Include the sequencing and schedule of dewatering and rewatering activities, plan view of all isolation elements, as well as a list of equipment and materials to adequately provide appropriate redundancy of all key plan functions (e.g., an operational, properly sized backup pump and/or generator). This standard material does not need to be submitted with a SPIF. However, it needs to be available to the Services at their request.

11 Any water intakes used for the project, including pumps used to dewater the work isolation area, will have a fish screen installed, operated and maintained according to NMFS' fish screen criteria (NMFS 1997; NMFS 2008).

12 The site will be stabilized during any significant break in work.

13 Project operations will cease under high flow conditions that may inundate the project area, except as necessary to avoid or minimize resource damage.

14 All discharge water created by construction (e.g., concrete washout, pumping for work area isolation, vehicle wash water, drilling fluids) will be treated to avoid negative water quality and quantity impacts. Removal of fines may be accomplished with bioswales; concrete washout with altered pH, may be infiltrated.

3. Equipment

1 Heavy equipment will be limited to that with the least adverse effects on the environment (e.g., minimally-sized, low ground pressure equipment).

2 When not in use, vehicles and equipment that contain oil, fuel, and/or chemicals will be stored in a staging area located at least 150 feet from the COE' jurisdictional boundary of wetlands and waterbodies. If possible staging is located at least 300 feet away from the COE's jurisdictional boundary of wetlands and waterbodies, and on impervious surfaces to prevent spills from reaching ground water. Where moving equipment daily at least 150 feet of waterbodies would create unacceptable levels of disturbance (multiple stream crossings, multiple passes over sensitive vegetation) a closer staging location with an adequate spill prevention plan may be proposed.

3 When conducting in-water or bank work, hydraulic lines will be filled with vegetable oil for the duration of the project to minimize impacts of potential spills and leaks.

4 Spill prevention & clean-up kits will be on site when heavy equipment is operating within 25 feet of the water.

5 To the extent feasible, work requiring use of heavy equipment will be completed by working from the top of the bank.

6 Equipment shall be checked daily for leaks and any necessary repairs shall be completed prior to commencing work activities around the water.

7 Equipment will cross the stream in the wet only under the following conditions:

a) equipment is free of external petroleum-based products, soil and debris has

been removed from the drive mechanisms and undercarriage; and

b) substrate is bedrock or coarse; and

c) in soft bottom streams mats or logs are used to drive across to minimize compaction; and

d) stream crossings will be performed at right angle if possible; and

e) no stream crossings will be performed at spawning sites when spawners are present or eggs or alevins could be in the gravel;

f) and the number of crossings will be minimized

4. Planting and Erosion Control

1 Within seven calendar days of project completion, any disturbed bank and riparian areas shall be protected using native vegetation or other erosion control measures as appropriate. For erosion control, sterile grasses may be used in lieu of native seed mixes.

2 If native riparian vegetation has to be disturbed it will be replanted with native herbaceous and/or woody vegetation after project completion. Planting will be completed between October 1 and April 15 of the year following construction. Plantings will be maintained as necessary for three years to ensure 50 percent herbaceous and/or 70 percent woody cover in year three, whatever is applicable. For all areas greater than 0.5 acres, a final monitoring report will be submitted to the COE in year three. Failure to achieve the 50 percent herbaceous and 70 percent woody cover in year three will require the applicant to submit a plan with follow up measures to achieve standards or reasons to modify standards.

3 Fencing will be installed as necessary to prevent access to revegetated sites by livestock, beavers or unauthorized persons. Beaver fencing will be installed around individual plants where necessary.

5. Water Quality

1 Landward erosion control methods shall be used to prevent silt-laden water from entering waters of the United States. These may include, but are not limited to, straw bales, filter fabric, temporary sediment ponds, check dams of pea gravel-filled burlap bags or other material, and/or immediate mulching of exposed areas.

2 Wastewater from project activities and water removed from within the work area shall be routed to an area landward of the OHWL in an upland disposal site to allow removal of fine sediment and other contaminants prior to being discharged to the waters of the United States.

3 All waste material such as construction debris, silt, excess dirt, or overburden resulting from this project will generally be deposited above the limits of flood water in an upland disposal site. However, material from pushup dikes may be used to restore microtopography, e.g. filling drainage channels.

4 If high flow or high tide conditions that may cause siltation are encountered during this project, work shall stop until the flow subsides.

5 Measures shall be taken to ensure that no petroleum products, hydraulic fluid, fresh cement, sediments, sediment-laden water, chemicals, or any other toxic or deleterious materials are allowed to enter or leach into waters of the US.

6 A spill prevention plan will be prepared for every project that utilizes motorized equipment or vehicles. Plan will be available to Service by request.

7 An erosion control plan will be prepared for every project that results in ground disturbance. Plan will be available to Service by request.

6. Isolation of Work Site

To reduce impacts to listed fish and water quality, major habitat restoration projects would be performed in isolation from flowing waters whenever possible. Examples of activities that may be done in the water include placing wood and rock structures that require very little in-water excavation, small scale work in systems with sand or coarser grained substrate and work in rock bottom systems. The choice and rational on whether or not to isolate the worksite needs to be included in the SPIF. The focus needs to be on minimization of impacts on water quality, listed salmonids and forage fish. If worksite isolation and fish capture and removal is the least impacting method, the applicant will follow procedures outlined in Appendix D

When working in the wet some turbidity monitoring may be required, subject to discussions between applicant and the Services. Turbidity monitoring generally is required when working in streams with more than 40 percent fines (silt/clay) in the substrate. Turbidity will be monitored only when turbidity generating work takes place, for example, pulling the culvert in the wet, reintroducing water. The applicant will measure the duration and extent of the turbidity plume (visible turbidity above background) generated. The data will be submitted to the Services.

Measurements of concentration preferably in mg/l are very helpful for the Services. Turbidity measurements are used by the Services to develop procedures to minimize turbidity and estimate take for future projects. If you can provide turbidity measurements in mg/l (NTUs are also less helpful for purposes of comparison with literature values) the Services will greatly appreciate your data.

General Prescriptions that Apply to some of the Proposed Restoration Actions

Bank stabilization, Redirection of Flow, Riparian Invasive Plant Removal and small scale Nutrient Enhancement are frequently associated with restoration actions proposed under this programmatic. For example, riparian enhancements often require some level of bank treatment and invasive plant removal; the installation of LWD often is associated with nutrient enhancement. Neither riparian invasive plant removal nor nutrient enhancement are regulated by the COE. However, if they are part of a project otherwise covered by this programmatic, they should follow the guidelines below:

1. Installation of Bank Stabilization Features:

Description: In many riparian areas anthropogenic activities have led to streambank degradation and accelerated erosion. This usually leads to lack of cover, growth of invasive plants, reduction in pool habitat, and increased fine sediment input and accumulation, which all negatively affect salmonids. Projects that improve riparian habitat conditions for salmonids, such as riparian plantings or side channel construction/reactivation, may utilize the bank stabilization techniques listed below. For a detailed description of each technique refer to Integrated Streambank Protection Guidelines (Cramer et al. 2003).

All restoration/enhancement projects that employ bank stabilization need to have restoration as their primary purpose and need to address the cause of the habitat degradation. Streambank

stabilization cannot be the only proposed component, but rather a conservation measure applied to help a primary action like removal of bank protection and installation of riparian revegetation to succeed.

a. **Bank Protection Engineered Log Jams**: The goal of bank protection ELJs is to protect a section of natural stream bank that may be vulnerable to accelerated erosion resulting from project activities or existing infrastructure that have altered the natural stream flow. Bank protection ELJs can be placed intermittently as a series of flow defectors or as a continuous revetment (Herrera 2006b). Examples in the Pacific Northwest include the Elwha River in Washington and Johnson Creek in Portland, Oregon.
b. **Groins/Spur Dikes:** Groins are large roughness elements that project from the bank into the channel. Different from barbs, groins extend above the high-flow water-surface elevation. Usually they are constructed in a series to provide continuous bankline roughness. Groins must be constructed exclusively from wood with minimal anchor rock. Constructing less permanent (compared to rock) wood groins will ensure that in the long-term the groins do not interfere with natural river dynamics and provide maximal habitat.
c. **Barbs/Vanes/Bendway Weirs:** Barbs, vanes, and bendway weirs are low-elevation structures that project from a bank into the channel. They are angled upstream to redirect flow away from the bank. They increase channel roughness and reduce water velocity near the bank. Barbs have to be constructed from wood with minimal anchor rock. Wooden barbs within the active river channel may be used to allow soft bank treatments such as reshaping and native plantings to mature. Constructing less permanent (compared to rock) wood groins will ensure that in the long-term the groins do not interfere with natural river dynamics and provide maximal habitat.
d. **Rootwad Toes:** Rootwad toes are structural features that prevent erosion at the toe of a streambank. The toe refers to that portion of the steambank that extends from the channel bottom up to the lower limit of vegetation. Rootwad toes can provide the foundation for soft upper-bank treatments such as bank reshaping and soil reinforcement. Rootwad toes provide better fish habitat and have a shorter life span than rock toes.
e. **Bank Reshaping:** Reducing the angle of the bank slope without changing the location of its toe. However, the toe may be reinforced with rootwads or coir logs.
f. **Soil Reinforcement/Soil Pillows:** Soil layers or lifts encapsulated within natural materials. Often the lifts are used to form a series of stepped terraces along the bank which then are planted with woody vegetation.
g. **Coir Logs:** Coir (coconut fiber) logs are long, sausage-shaped bundles of bound-together coir. They are commonly used as a temporary measure to stabilize the bank toe while riparian vegetation grows.

2. In-Channel Nutrient Supplementation

Description: Salmon and anadromous trout runs in most of the rivers in Washington State are significantly reduced compared to historic levels. This has resulted in a reduction of marine-derived nutrients that feeds the food chain including juvenile salmonids. To provide more nutrients up to historic levels the COE proposes to permit nutrient supplementation. Salmon carcasses or carcass analogs will be obtained from non-stream sources, generally hatcheries, to distribute in stream systems that have below-historic numbers of salmon carcasses. Distribution of carcasses will follow WDFW technical guidance (the WDFW protocol and guidelines document describes the application of fertilizer however, that action is not covered by this PBA). Distribution of carcasses will occur within the current anadromous zone of a watershed or within

areas historically accessible to anadromous fish. Carcasses or analogs will be deployed randomly throughout riparian and stream areas by placing individual or several carcasses on the ground, in the water, or wedging into accumulated wood. Work may entail use of trucks and hand crews.

Conservation Measures:

a. WDFW's technical guidance document "Protocols and Guidelines for Distributing Salmonid Carcasses, Salmon Carcass Analogs, and Delayed Release Fertilizers to Enhance Stream Productivity in Washington State(Saldi-Caromile et al. 2004) will be followed.
b. The revised Co-managers Salmonid Disease Control Policy (NWIFC and WDFW July 2006) Section 2.4.5. Carcass Transfer Requirements will be followed.
c. Nutrient enhancement will be covered only, if a recovery document, watershed plan, or best available science identifies nutrient deficiency as one of the limiting factors.
d. Salmon carcass deployment will not be conducted in areas where documented grizzly bear sightings have occurred within the last 4 weeks.

3. Riparian Invasive Plant Removal

Description: Functioning riparian corridors provide many essential benefits to salmonids including shade and recruitment of LWD. In many areas in Washington State riparian corridors have been disrupted by anthropogenic activities and subsequently taken over by nonnative invasive vegetation. To re-establish native vegetation the COE proposes to permit treatment of invasive plant infestations in riparian areas using biological controls, mechanical methods, and chemical herbicides. The following five herbicides are proposed under this action category: Clopyralid, Glyphosate, Imazapyr, Metsulfuron, and Sulfometuron.

Clopyralid is a relatively new and very selective herbicide. It is toxic to some members of only three plant families: the composites (Compositae), the legumes (Fabaceae), and the buckwheats (Polygonaceae). Clopyralid is very effective against knapweeds, hawkweeds, and Canada thistle at applications rates of 0.10 to 0.375 pounds per acre. Clopyralid is a WSSA Group 4 herbicide. Its selectivity makes it an attractive alternate herbicide on sites with non-target species that are sensitive to other herbicides.

Glyphosate is a non-selective, broad-spectrum herbicide that is labeled for a wide variety of uses. It is absorbed by leaves and translocated throughout the plant, and disrupts the photosynthetic process. The herbicide affects a wide variety of plants, including grasses and many broadleaf species, and has the potential to eliminate desirable as well as undesirable vegetation. Glyphosate is a WSSA Group 9 herbicide. Some plant selectivity can be achieved by using a wick applicator to directly apply glyphosate to the target plant, thereby avoiding desirable vegetation.

Imazapyr is used for pre- and post-emergent control of annual and perennial grasses and broadleaf weeds, brush, vines, and many deciduous trees. Imazapyr is absorbed by the leaves and through the root system, disrupting amino acid biosynthesis. Effects may not be seen for two weeks. Complete plant kill may take several weeks. Imazapyr is a WSSA Group 2 herbicide. It can be used in ground broadcast, spot and localized, cut stump, frill and girdle, and tree injection applications at 0.5 to 1.5 lbs active ingredient per acre per year not to exceed 1.5 lbs per acre per year. The imazapyr formulation of Arsenal® herbicide is registered for use in non-crop sites for selective and total weed control.

Metsulfuron methyl is used for the control of brush and certain woody plants, annual and perennial broadleaf weeds, and annual grasses. Metsulfuron methyl is absorbed through the roots and foliage and inhibits cell division in the roots and shoots. Metsulfuron methyl is a WSSA Group 2 herbicide. Application should be made before or during active growth periods at a rate of 0.33 to 2.0 ounces per acre.

Sulfometuron methyl is a non-selective herbicide used primarily to control broadleaf weeds and grasses. Its primary use is for noxious weed control. Sulfometuron methyl is WSSA Group 2 herbicide. Application rates for most plants range from 0.023 to 0.38 ounces per acre.

Treatment of an invasive plant site may include one or more of the following treatment methods: Stem injection; squirt with backpack or hand-held sprayers, squirt bottles, wicking or wiping. Application with sprayers mounted on or towed by trucks is not proposed. A combination of treatments may occur to achieve effective control or eradication of an invasive plant species at many sites. All herbicide applications will comply with label instructions, and may be further restricted as stated below. Treatment methods were selected due to their low potential for adversely affecting aquatic species, while facilitating riparian restoration through invasive plant control. Herbicides were selected due to their low toxicity to aquatic species and application methods were selected for their low potential for contaminating soils, thereby minimizing the risk of herbicides leaching to streams. Methods, tools, and project design criteria are summarized in Table 1, and subsequently discussed in more detail.

Table 1: Summary of Methods, Tools, and Conservation Measures for Invasive Plant Treatment

Methods	Tools	Conservation Measures
Manual & Mechanical Treatment	Various tools listed below	*Manual & Mechanical Treatment*
Hand pulling	Non-motorized tools (weed wrenches, etc)	Hand pulling
Seed clipping	String trimmer or hand-held blade	Transport only daily fuel supply for chainsaws and string trimmers to project site -Do not fuel chainsaws and string trimmers within 100 feet of water
Stabbing	Shovel, hoe, or similar hand tool	
Girdling	Chainsaw, axe, or similar hand-held tool.	
Cutting	String trimmer or hand-held blade	
Solarization	Plastic, geotextile, cardboard, or similar ground cover material	
Herbicide Treatment	Selective application techniques for clopyralid, aquatic labeled glyphosate, imazapyr (aquatic and non-aquatic labeled), metsulfuron methyl, sulfometuron methyl	-Only daily quantities of herbicide transported to project site -Do not apply herbicides if rain is predicted within 24 hours -Emergent treatment restricted to knotweed with aquatic labeled glyphosate -No treatment of submerged aquatic plants -Spill prevention, cleaning, and storage requirements
		-Use only LI 700, Agri-Dex, or an equivalent when adding surfactants to formulations .
Stem injection	Appropriate syringes/injectors	-Knotweed applicators will be familiar with appropriate methods -Knotweed injection will use only aquatic labeled glyphosate (up to 100 percent concentration) -Emergent knotweed stems > 0.75 inches will be injected
Cut-stump and Hack & squirt	Backpack or hand-held sprayers, squirt bottles, and wiping applicators (brush, fabric, etc) Axe, hatchet, machete, drill, chainsaw, or other hand-held tool. Squirt bottles, backpack sprayer, or other hand-held spray bottle. Also tree injector and pellet gun.	-Herbicides to be used are imazapyr, metsulfuron methyl, and glyphosate -Application with aquatic glyphosate and aquatic imazapyr allowed to water's edge, and bankfull level for metsulfuron methyl, non-aquatic imazapyr
Wicking, wiping	Sponge, wick, or similar absorbent material	-Herbicides to be used are clopyralid, aquatic labeled glyphosate, imazapyr, metsulfuron methyl, and sulfometuron methyl -Application with aquatic glyphosate and aquatic imazapyr allowed to water's edge, and to bankfull level for clopyralid, and sulfometuron methyl
Spot spray	Backpack, hand-pumped, or handheld spray bottles	-Herbicides to be used are clopyralid, aquatic labeled glyphosate, imazapyr, metsulfuron methyl, and sulfometuron methyl -Spray of aquatic glyphosate, metsulfuron, and sulfometuron allowed to bankfull level. Hand-held spray application (no backpack spray) of aquatic glyphosate, imazapyr metsulfuron, and sulfometuron allowed

Methods	Tools	Conservation Measures
		within intermittent or ephemeral channels -No spray of clopyralid within 15 feet of perennial (flowing water in summer) stream bankfull level.
		-No spray of clopyralid in intermittent/ephemeral streams -Hand-held spray application (no backpack spray) of aquatic glyphosate and aquatic imazapyr to 15 feet of waters' edge in perennial channels -Drift minimized by 200-800 µm droplet size, and wind speeds consistent with label or local agency requirements, whichever is less
Biological Control	Insects, parasites, or pathogens	-State and U.S. Animal & Plant Health Inspections Service approved -Agents with direct adverse effects to non-target organisms not used
Site Restoration		
Site preparation	Rakes, shovels, hoes, and similar non-motorized hand tools.	-Minimize ground disturbance by clearing only area necessary for effective planting
Planting & seeding	Rakes, shovels, hoes, and similar non-motorized hand tools.	

1. Manual and Mechanical
    a. Hand Pulling – Uprooting is performed either by hand or using hand (non-motorized) tools. Generally appropriate for non-rhizome forming, tap-rooted species or species which produce only from seed. Treatment occurs when plant growth stage and soil conditions allow, and prior to seed-set for annual species. Hand pulling of emergent invasive plants is included.
    b. Seed Clipping – Seed heads are cut, bagged, and removed from the area. The remainder of plant is left intact, but is likely to be treated with another method.
    c. Stabbing – Some invasive plants can be severely weakened or killed by severing or injuring the carbohydrate storage structure at the base of the plant. Depending on species, this structure may be a root corm, storage rhizome, or taproot. Can be accomplished with shovel, hoe, or similar hand tool.
    d. Girdling – A strip of bark is removed around the base of susceptible woody species. The vascular cambium, or inner bark, which translocates carbohydrates between roots and leaves, is removed
    e. Cutting – Removal of the above-ground portion of an invasive plant by cutting with chainsaw, handsaw, pruning shears, or similar hand held device. Also includes mowing or cutting with a string-trimmer type machine, which does not have wheels or contact the ground.
    f. Solar deprevation (ground cover) – Invasive plant infestations may be covered with plastic, geotextile, cardboard, or other ground cover material to kill the plant and roots, or reduce plant vigor prior to treatment with another method.

2. Herbicide Treatments

a. Do not apply herbicides in areas where listed plants may be present. Botanical surveys must be conducted in locations that could support listed plants before any vegetation treatment (including manual and mechanical) is conducted.
b. Stem Injection – Stems of actively growing species are injected with herbicide, usually near the base of the plant.
c. Cut-Stump – Herbicide is applied by spray, squirt, wicking, or wiping to the stump of a plant (usually a shrub or tree) shortly after the shoot or trunk is cut down.
d. Wicking & Wiping – Use a sponge or wick to wipe herbicide onto foliage, stems, or trunk. Use of wicking and wiping method reduces the possibility affecting non-target plants.
e. Spot Application – Herbicide is directly sprayed onto target plants only, and spraying of desirable, non-target vegetation is avoided. Includes backpack and hand-pumped spray or squirt bottles, which can target very small plants or parts of plants (foliage, stems, or trunk).
f. Hack & Squirt – Woody species are cut using a saw or axe, or drilled; herbicide is then immediately applied to the cut with a backpack sprayer, squirt bottle, syringe, or similar equipment.

3. Biological Controls

a. Biological control is the inoculation of an infestation site with insects, parasites, or pathogens that specifically target the invasive plant species of concern. Treatment of invasive plant infestations with biological controls is a gradual process requiring several years to reach full effectiveness. Subsequent treatment with other methods may also occur.
b. Site preparation and competitive planting and seeding
    i. Invasive plant infestation sites treated using one or more of the above stated methods may be revegetated by planting cuttings, seedlings, or seeding.
    ii. Site preparation can involve removal of litter and duff layer suitable to allow proper soil to seed/root contact. This will be accomplished by scuffing or scalping micro-sites (generally less than 1 square meter) with hand tools within the larger planting/seeding site.

Method Specific Prescriptions

1. Manual and Mechanical Methods
   a. Minimize treating invasive plants on streambanks when listed aquatic species are present, or likely to be present.
   b. Use the least ground-disturbing method that results in effective invasive plant treatment.
2. Fuel handling
   a. Transport no more than a one day supply of fuel for chainsaws and string-trimmers into riparian areas.
   b. Fueling of chainsaws and string-trimmers will not occur within 100 feet of surface waters.
3. Herbicides General Criteria
   a. Only daily-use quantities of herbicides will be transported to the project site.
   b. Use only LI 700®, Agri-Dex®, or an equivalent when adding surfactants to formulations.
   c. Do not apply herbicides if precipitation is predicted within 24 hours.
   d. Only herbicide application methods for plants emergent from water are stem injection, wicking or wiping, and hand-held spray bottle application of glyphosate to knotweed. No application to submerged aquatic vegetation with any herbicide is included.
   e. Areas used for mixing herbicides will be placed where an accidental spill will not run into surface waters or result in groundwater contamination. Impervious material will be placed beneath mixing areas in such a manner as to contain any spills associated with mixing refilling.
   f. Equipment cleaning and storage and disposal of rinsates and containers will follow all applicable state and Federal laws.
4. Knotweed stem-injection
   a. Individuals will be familiar with proper glyphosate stem-injection methodology prior to treatment.
   b. Only aquatic glyphosate formulations will be used. The formulation can be used at up to 100 percent concentration for the stem injection method. The formulation will be diluted to 50 percent or less active ingredient when applied directly to fresh stem cuts using wicking or wiping, and up to the percentage allowed by label instructions when applied to foliage using low pressure hand-held spot spray applicators.
   c. Larger emergent knotweed can be treated with glyphosate by stem injection, and smaller emergent knotweed by wicking/wiping and spot spray with hand-held sprayers. Wicking or wiping and hand-held spray bottle application of glyphosate allowed to emergent knotweed plants less than 4 to 5 feet tall, and usually smaller.
   d. Emergent plants with stems over 0.75 inch in diameter will be treated by stem injection.
   e. Most knotweed patches are expected to have overland access. However, some sites may only be reached by water travel, either by wading or inflatable raft (or kayak). The following measures will be used to reduce the risk of a spill during water transport:

        i. No more than 2.5 gallons of glyphosate will be transported per person or raft, and typically it will be one gallon or less.
        ii. Glyphosate will be carried in 1 gallon or smaller plastic containers. The containers will be wrapped in plastic bags and then sealed in a dry-bag. If transported by water craft, the dry-bag will be secured to the watercraft.
5. Cut-stump and hack & squirt
    a. Herbicides to be used are imazapyr, metsulfuron methyl, and aquatic labeled glyphosate.
    b. Application with aquatic labeled glyphosate and aquatic labeled imazapyr allowed to waters' edge, and to bankfull level for metsulfuron methyl and imazapyr not labeled for aquatic use.
6. Wicking and wiping
    a. Herbicides to be used are clopyralid, aquatic labeled glyphosate, imazapyr, metsulfuron methyl, and sulfometuron methyl.
    b. For perennial streams, wicking and wiping application with aquatic labeled glyphosate and aquatic labeled imazapyr is allowed to waters' edge, and to bankfull level for clopyralid, imazapyr (not aquatic labeled), metsulfuron methyl, and sulfometuron methyl.
    c. For intermittent and ephemeral channels, clopyralid, aquatic labeled glyphosate, imazapyr, metsulfuron methyl, and sulfometuron methyl can be applied to all dry portions of the channel.
7. Spot application
    a. Herbicides to be used are clopyralid, aquatic glyphosate, imazapyr, metsulfuron methyl, and sulfometuron methyl.
    b. Do not spot spray clopyralid within 15 feet of the bankfull level of perennial streams.
    c. Do not spot spray clopyralid within intermittent or ephemeral channels.
    d. Spot spray using aquatic labeled glyphosate and aquatic labeled imazapyr allowed to within 15 feet of the edge of water with hand-held, hand-pump spray or squirt bottles (no backpack sprayers).
    e. Spot spray using metsulfuron methyl, and sulfometuron methyl allowed to bankfull level of perennial streams with backpack sprayers, hand-pump sprayers, and squirt bottles.
    f. Spot spray of aquatic labeled glyphosate, imazapyr, metsulfuron methyl, and sulfometuron methyl within dry intermittent and ephemeral channels allowed only with hand-held, hand-pumped sprayers and squirt bottles (no backpack sprayers). Excluding backpack spot spray is a conservation measure intended to minimize overspray within channels, and subsequent "first flush" exposures to aquatic resources, while still allowing full efficacy of the treatment.
    g. For foliar backpack spray applications, use only low pressure sprayers producing droplet sizes between 200 and 800 microns to minimize drift.
    h. Backpack spray activities will only occur during conditions with low drift potential, defined as wind velocities greater than two and less than 10 mph, or as stated on herbicide label.
8. Biological Controls
    a. All biological controls used will be U.S. Animal and Plant Health Inspection Service and state approved.
    b. Agents demonstrated to have direct negative effects on non-target organisms will not be released.

9. Site Preparation and Competitive Planting and Seeding
    a. Minimize ground disturbance by clearing only the area necessary for effective planting.
10. Extent of Treatment
    a. Within each sixth field Hydrologic Unit Code (HUC) containing listed aquatic species, no more than 10 percent of the total riparian area, measured as adjacent stream length, will be treated within any one year period. This includes 10 percent of flowing streams, and 10 percent of intermittent streams, measured separately.

Table 2 summarizes conservation measures to minimize effects of herbicide application to water quality.

Table 2: Summary of Conservation Measures to Minimize Effects to Water Quality and Listed Salmonids

	Perennial/flowing channels		**Dry intermittent and ephemeral channels, and ditches**	
	Spot spray	**Hand/select**	**Spot spray**	**Hand/select**
Clopyralid	15 feet from bankfull	bankfull	Bankfull	allowed through channel/ditch
Glyphosate (aquatic)	115 feet from edge of water	edge of water	allowed through channel/ditch	allowed through channel/ditch
Imazapyr	bankfull	bankfull	allowed through channel/ditch	allowed through channel/ditch
Imazapyr (aquatic)	15 feet from edge of water	edge of water	allowed through channel/ditch	allowed through channel/ditch
Metsulfuron methyl	bankfull	bankfull	allowed through channel/ditch	allowed through channel/ditch
Sulfometuron methyl	bankfull	bankfull	allowed through channel/ditch	allowed through channel/ditch

<u>General Prescriptions for Herbicide Use</u>

1 When consistent with label instructions, use water when diluting herbicides prior to application.
2 A spill cleanup kit will be available whenever herbicides are used, transported, or stored.
3 A certified/licensed pesticide applicator will oversee all herbicide application projects.
4 In riparian areas, use only surfactants or adjuvants that do not contain any ingredients on EPA's List 1 or 2, where listing indicates a chemical is of toxicological concern, or is potentially toxic with a high priority for testing

<u>Excluded Activities</u>

- Application with sprayers mounted on or towed by trucks is not proposed.
- Treatment of submerged aquatic plants is not proposed.

4. Prescriptions Specific to Bull Trout

BT1. In bull trout local population areas (spawning and early rearing areas), in-water work will only occur during the watershed-specific timing windows identified in Appendix C – WDFW's *Gold and Fish Pamphlet* (WDFW 1999) or more up-to-date, USFWS-approved information. For information on local population areas, refer to the "Key Habitat for Bull Trout Recovery" maps in the *Draft Recovery Plan for the Coastal-Puget Sound Distinct Population Segment of Bull Trout* or to Appendix D: Table 1. BT2. Fish passage structures will not be installed and barriers will not be removed in locations where there are concerns for impacts to bull trout populations from exotic or non-native species.

BT3. In-water work will only occur during the timing windows identified in Appendix C, when the in-water restoration activity occurs in the following water bodies: the Duwamish Waterway, Lake Union and the Ship Canal, Lake Washington, Sammamish Basin, Columbia River Mainstem or in marine nearshore and estuarine areas.

5. Prescriptions Specific to Non-Fish Species

The proposed action includes activity or species-specific (or both) measures and practices relating to effects of restoration actions on several terrestrial plant and animal species managed by the USFWS. These measures were designed to ensure that the underlying restoration activities will have either no affect or will be unlikely to adversely affect those species such that those species need not be addressed in formal consultation. The relevant effect determinations for those species are addressed by letter of concurrence under separate cover. This document lists those species and describes the protective measures and practices in Appendix F, below.

<u>Implementation Process</u>

1 For each project carried-out under this restoration program, the applicant will fill out a SPIF and submit to the COE.
2 The COE will review each project to ensure that the project meets the description and any other criteria of the proposed activity category such that any adverse effects to ESA-listed species and their designated critical habitats are within the range of effects considered in the Opinion.
3 If the COE determines that the proposed action does not quite meet all of the criteria outlined in the action categories, but all adverse effects to ESA-listed species and their designated critical habitats are within the range of effects considered in the Opinion, the COE will inform the Services about the exception in a Memorandum to the Services and provide rationale for how the action meets the intent and results of the of the restoration activity as described for this programmatic consultation. If the Services disagree with the COE determination, the project will need to go through individual consultation.
4 The COE will forward all SPIFs and copies of necessary project plans (*i.e.*, pollution and erosion control, temporary access routes, and stormwater management), to the appropriate NMFS and USFWS field offices for review.
5 The Services will review and approve a SPIF electronically, if warranted, within 30 days.

6. After project completion the applicant will report required sediment monitoring data (extent and duration of plume) to the COE.
7. The COE will prepare an annual monitoring report by evolutionary significant unit (ESU) or Interim Recovery Unit (IRU) for take tracking purposes. The monitoring report will include:
    a. The number of permits that were issued under each of the nine action categories.
    b. Projects/SPIF that were approved with minor deviations.
    c. The sum of all project extents (stream miles effected) by watershed.
    d. The turbidity monitoring data.
    e. A list of problems encountered and solutions.
8. The COE and the Services will conduct an annual coordination meeting to discuss the annual monitoring report and any actions that could improve conservation or make the program more efficient or more accountable.