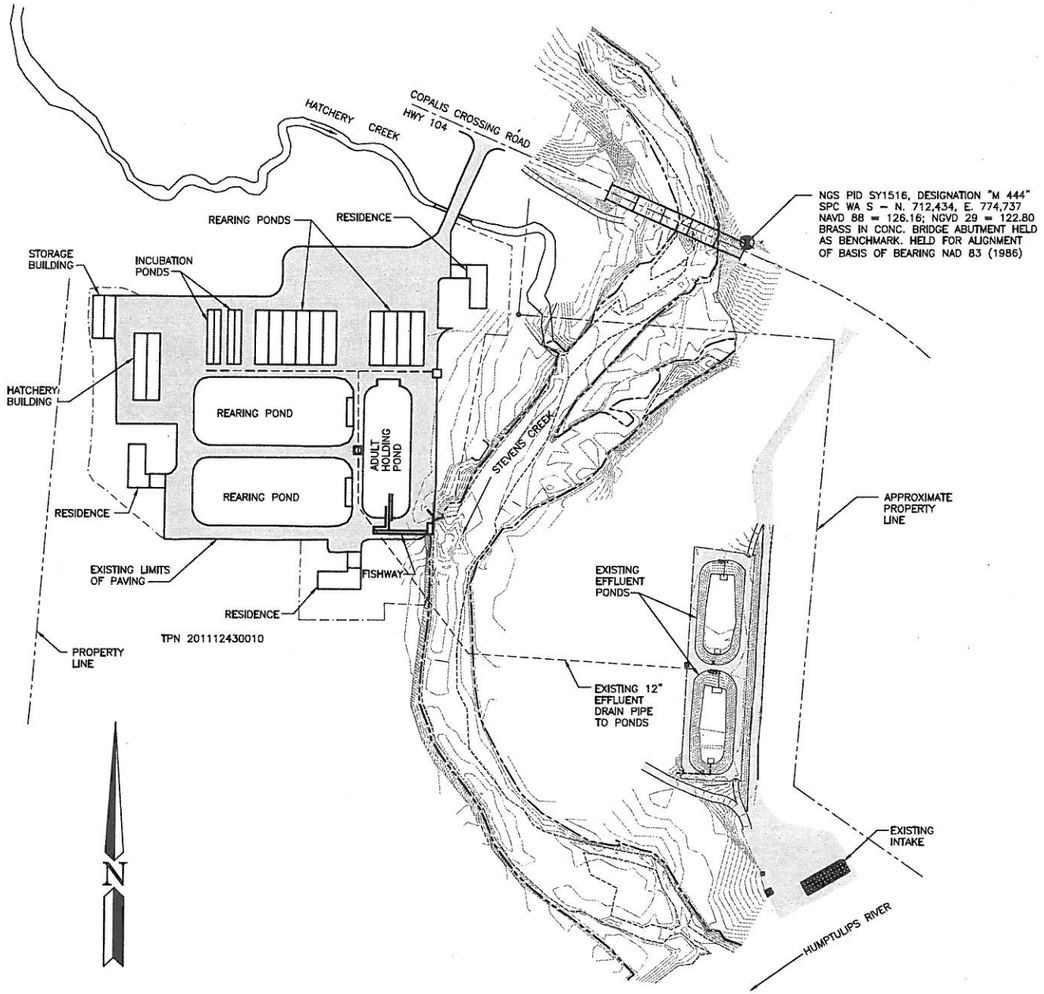

EXISTING HATCHERY SITE PLAN
SCALE: 1" = 50'

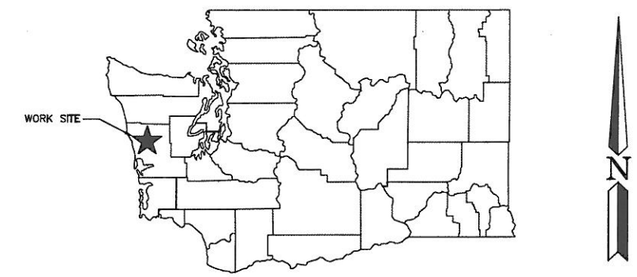

STATE MAP
NO SCALE

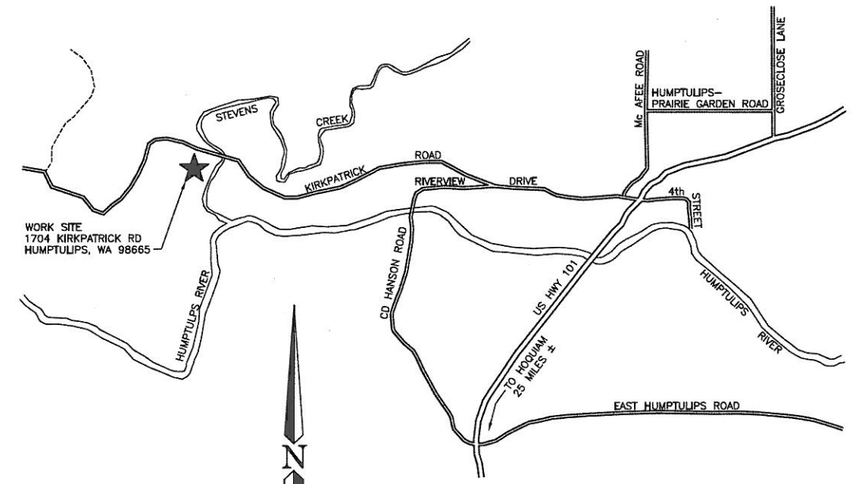

VICINITY MAP
NO SCALE
SEC 12, T20N, R11W

90% SUBMITTAL
NOT FOR CONSTRUCTION

HDR Fisheries DESIGN CENTER

WASHINGTON STATE
DEPARTMENT OF FISH AND WILDLIFE

SYM	DATE	REVISION DESCRIPTION	BY
		APPROVED AND RELEASED FOR CONSTRUCTION	

CHIEF ENGINEER ..... DATE: .....
PROGRAM ..... DATE: .....

0 —— 1"
BAR MEASURES ONE INCH ON ORIGINAL DRAWINGS

DESIGNED BY
CHECKED BY
DRAWN BY ACB
DATE December 13, 2012

HUMPTULIPS HATCHERY
POLLUTION ABATEMENT POND
EXISTING SITE PLAN,
STATE MAP AND VICINITY MAP

PROJECT NO. GH:H34:12–3
SHEET 1 OF

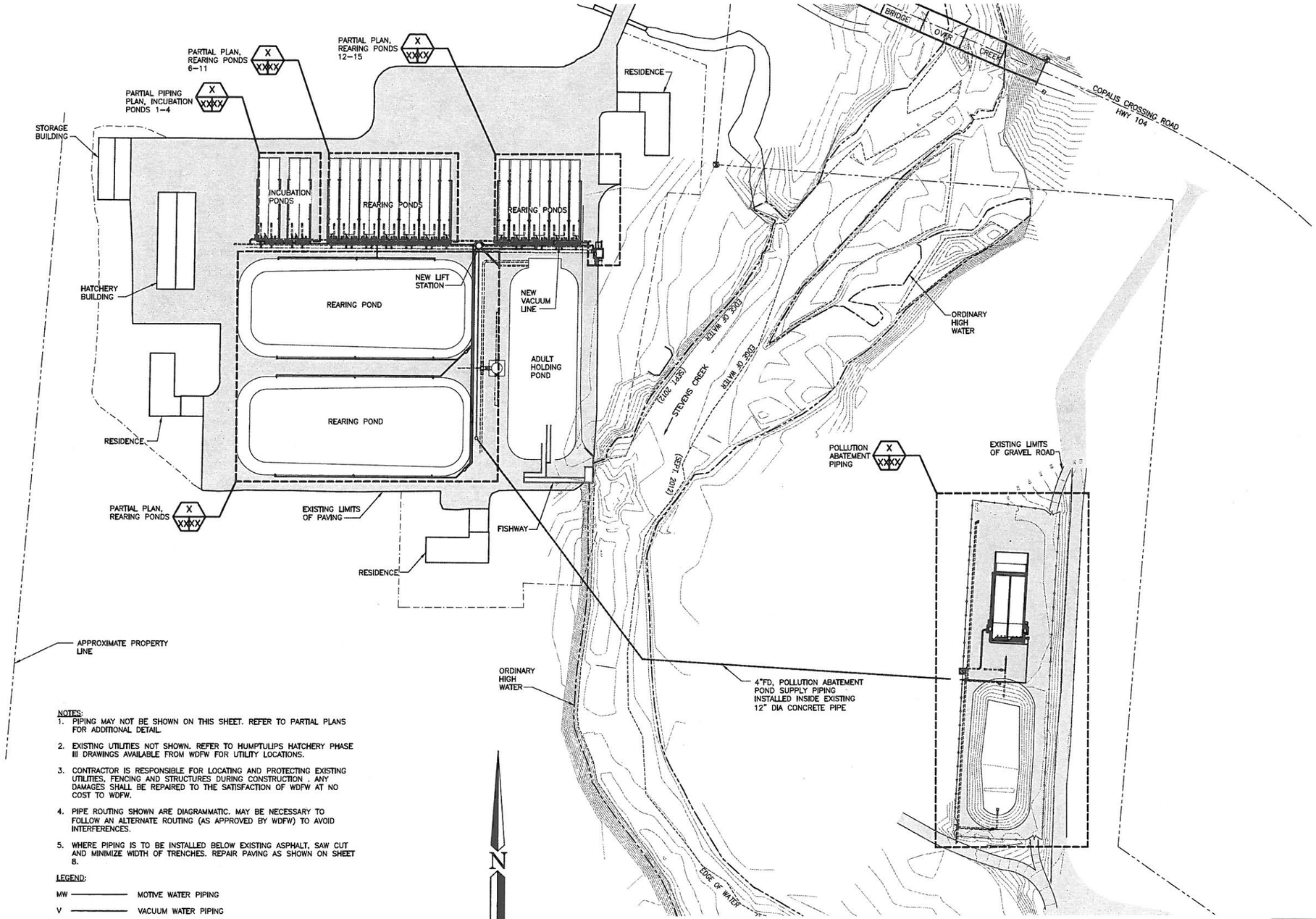

NOTES:

1. PIPING MAY NOT BE SHOWN ON THIS SHEET. REFER TO PARTIAL PLANS FOR ADDITIONAL DETAIL.
2. EXISTING UTILITIES NOT SHOWN. REFER TO HUMPTULIPS HATCHERY PHASE III DRAWINGS AVAILABLE FROM WDFW FOR UTILITY LOCATIONS.
3. CONTRACTOR IS RESPONSIBLE FOR LOCATING AND PROTECTING EXISTING UTILITIES, FENCING AND STRUCTURES DURING CONSTRUCTION . ANY DAMAGES SHALL BE REPAIRED TO THE SATISFACTION OF WDFW AT NO COST TO WDFW.
4. PIPE ROUTING SHOWN ARE DIAGRAMMATIC. MAY BE NECESSARY TO FOLLOW AN ALTERNATE ROUTING (AS APPROVED BY WDFW) TO AVOID INTERFERENCES.
5. WHERE PIPING IS TO BE INSTALLED BELOW EXISTING ASPHALT, SAW CUT AND MINIMIZE WIDTH OF TRENCHES. REPAIR PAVING AS SHOWN ON SHEET 8.

LEGEND:

MW	MOTIVE WATER PIPING
V	VACUUM WATER PIPING
D	DRAIN PIPING
FD	FORCED DRAIN PIPING

SITE PLAN
SCALE: 1" = 50'

90% SUBMITTAL
NOT FOR CONSTRUCTION

HDR Fisheries DESIGN CENTER

WASHINGTON STATE
DEPARTMENT OF FISH AND WILDLIFE

SYM	DATE	REVISION DESCRIPTION	BY

APPROVED AND RELEASED FOR CONSTRUCTION
CHIEF ENGINEER ..... DATE: .....
PROGRAM ..... DATE: .....

0 — 1"
BAR MEASURES ONE INCH ON ORIGINAL DRAWINGS

DESIGNED BY
CHECKED BY
DRAWN BY JLC
DATE January 14, 2013

HUMPTULIPS HATCHERY
POLLUTION ABATEMENT POND
PIPING PLAN AND GENERAL NOTES

PROJECT NO. GH:H34:12–3
SHEET 2 OF

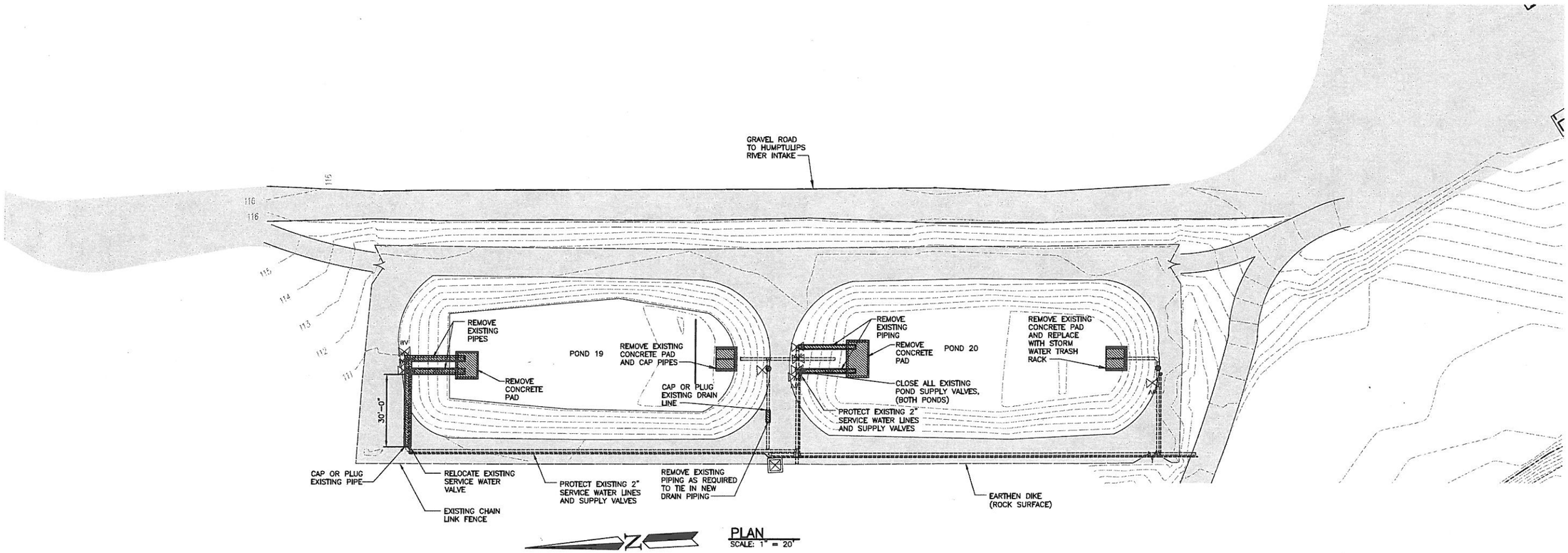

PLAN
SCALE: 1" = 20'

90% SUBMITTAL
NOT FOR CONSTRUCTION

HDR Fisheries DESIGN CENTER

WASHINGTON STATE
DEPARTMENT OF FISH AND WILDLIFE

SYM	DATE	REVISION DESCRIPTION	BY

APPROVED AND RELEASED FOR CONSTRUCTION
CHIEF ENGINEER ..... DATE: .....
PROGRAM ..... DATE: .....

0 ——— 1"
BAR MEASURES ONE INCH ON ORIGINAL DRAWINGS

DESIGNED BY
CHECKED BY
DRAWN BY ACB
DATE January 14, 2013

HUMPTULIPS HATCHERY
POLLUTION ABATEMENT POND
DEMOLITION PLAN
POND AREA

PROJECT NO. GH:H34:12-3
SHEET 3 OF

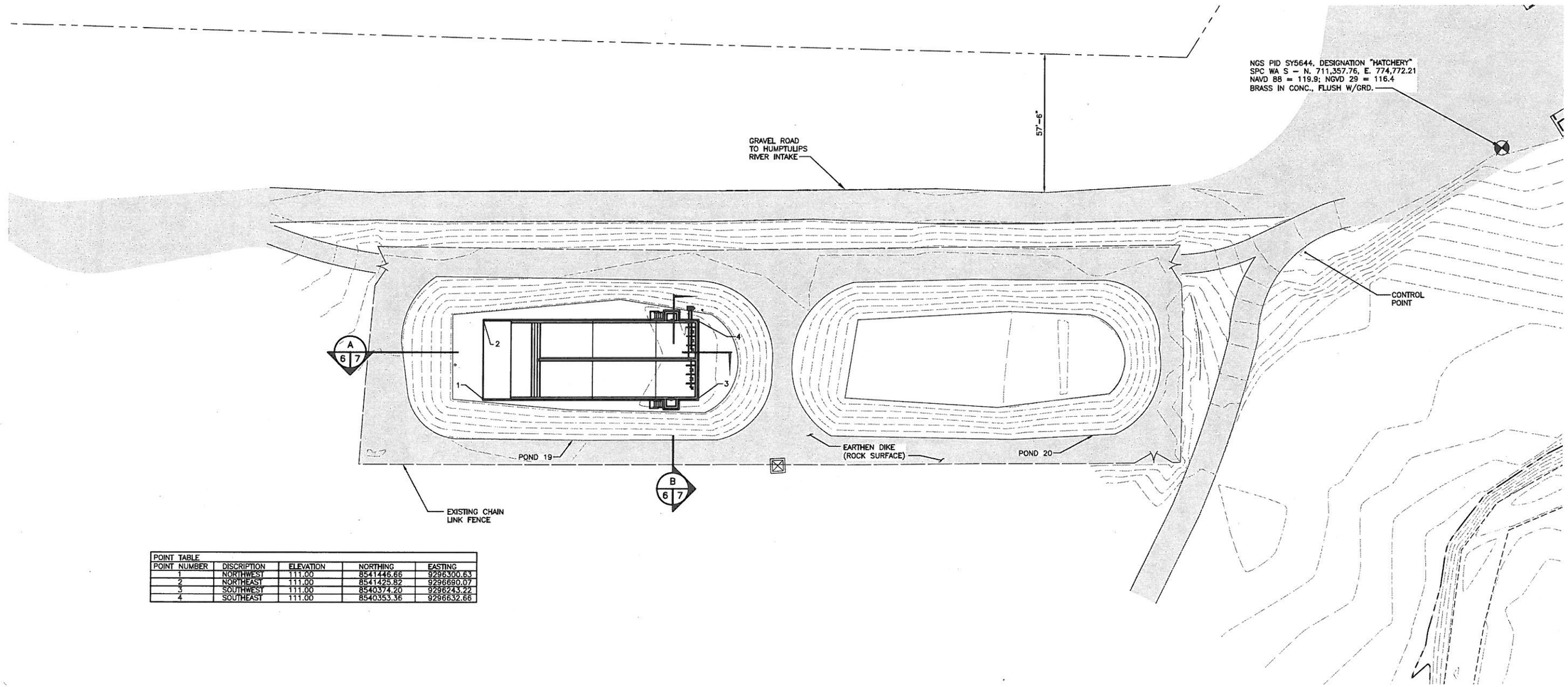

POINT TABLE				
POINT NUMBER	DISCRIPTION	ELEVATION	NORTHING	EASTING
1	NORTHWEST	111.00	8541446.66	9296300.63
2	NORTHEAST	111.00	8541425.82	9296690.07
3	SOUTHWEST	111.00	8540374.20	9296243.22
4	SOUTHEAST	111.00	8540353.36	9296632.66

N

PLAN
SCALE: 1" = 20'

90% SUBMITTAL
NOT FOR CONSTRUCTION

HDR Fisheries DESIGN CENTER

WASHINGTON STATE
DEPARTMENT OF FISH AND WILDLIFE

SYM	DATE	REVISION DESCRIPTION	BY

APPROVED AND RELEASED FOR CONSTRUCTION
CHIEF ENGINEER ..... DATE: .....
PROGRAM ..... DATE: .....

0 —— 1"
BAR MEASURES
ONE INCH ON
ORIGINAL DRAWINGS

DESIGNED BY
CHECKED BY
DRAWN BY ACB
DATE January 14, 2013

HUMPTULIPS HATCHERY
POLLUTION ABATEMENT POND
GRADING PLAN
POND AREA

PROJECT NO.
GH:H34:12–3

SHEET 4 OF

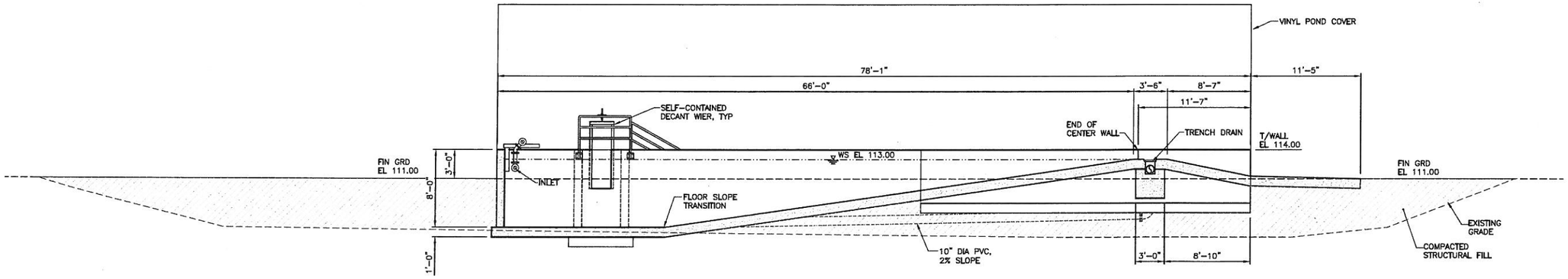

SECTION A 1|12
SCALE: 3/16" = 1'-0"

NOTE:
VINYL POND COVER NOT SHOWN.

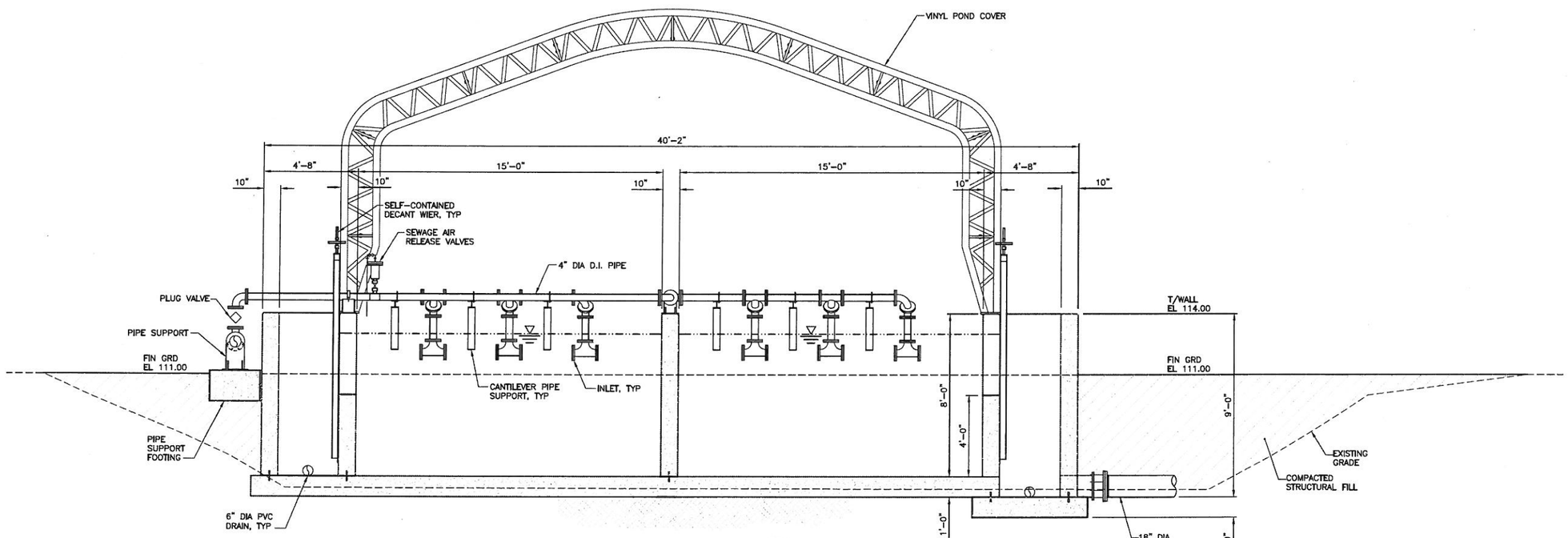

SECTION B 1|12
SCALE: 3/8" = 1'-0"

NOTE:
VINYL POND COVER NOT SHOWN.

90% SUBMITTAL
NOT FOR CONSTRUCTION

HDR Fisheries DESIGN CENTER

WASHINGTON STATE
DEPARTMENT OF FISH AND WILDLIFE

SYM	DATE	REVISION DESCRIPTION	BY

APPROVED AND RELEASED FOR CONSTRUCTION
CHIEF ENGINEER ..... DATE: .....
PROGRAM ..... DATE: .....

0 — 1"
BAR MEASURES ONE INCH ON ORIGINAL DRAWINGS

DESIGNED BY
CHECKED BY
DRAWN BY ACB
DATE January 14, 2013

HUMPTULIPS HATCHERY
POLLUTION ABATEMENT POND
CIVIL SECTIONS

PROJECT NO. GH:H34:12-3
SHEET 5 OF

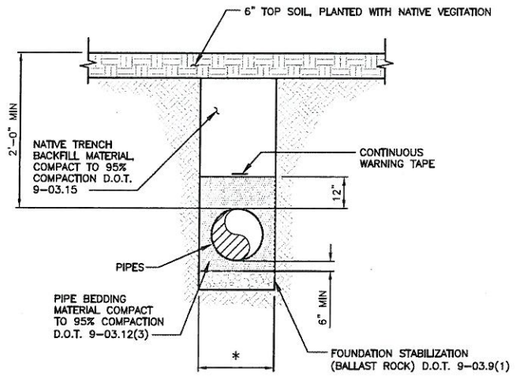

TYPICAL PIPELINE TRENCH DETAIL

NO SCALE

NOTE:

BED THE ENTIRE WIDTH OF THE TRENCH BOX.

* TRENCH WIDTH DIMENSIONS FOR PIPES LESS THAN 18 INCHES ARE OUTSIDE DIAMETER (OD) PLUS 12" AND FOR PIPES GREATER THAN OR EQUAL TO 18 INCHES ARE OUTSIDE DIAMETER (OD) PLUS 24"

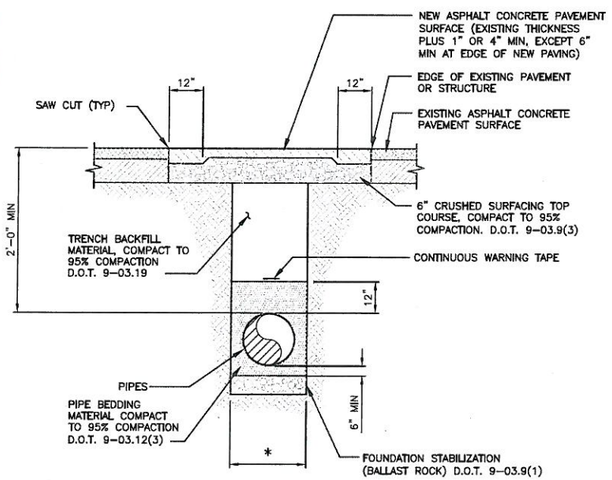

UNDER EXISTING PAVEMENT TYPICAL PIPELINE TRENCH DETAIL

NO SCALE

NOTE:

BED THE ENTIRE WIDTH OF THE TRENCH BOX.

* TRENCH WIDTH DIMENSIONS FOR PIPES LESS THAN 18 INCHES ARE OUTSIDE DIAMETER (OD) PLUS 12" AND FOR PIPES GREATER THAN OR EQUAL TO 18 INCHES ARE OUTSIDE DIAMETER (OD) PLUS 24"

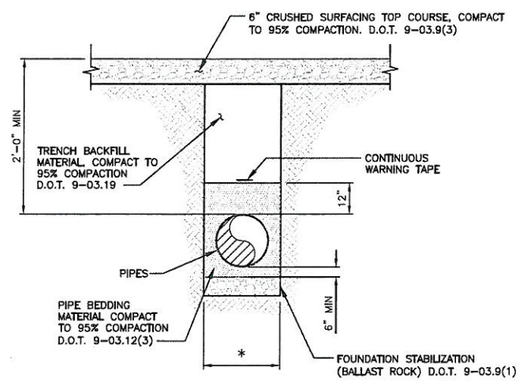

UNDER EXISTING GRAVEL AREAS TYPICAL PIPELINE TRENCH DETAIL

NO SCALE

NOTE:

BED THE ENTIRE WIDTH OF THE TRENCH BOX.

* TRENCH WIDTH DIMENSIONS FOR PIPES LESS THAN 18 INCHES ARE OUTSIDE DIAMETER (OD) PLUS 12" AND FOR PIPES GREATER THAN OR EQUAL TO 18 INCHES ARE OUTSIDE DIAMETER (OD) PLUS 24"

NOTES:

BEARING AREA OF CONCRETE THRUST BLOCK BASED ON 200 PSI PRESSURE AND SAFE SOIL BEARING LOAD OF 2,000 PONDS PER SQUARE FOOT.

AREAS MUST BE ADJUSTED FOR OTHER PIPE SIZE, PRESSURES AND SOIL CONDITIONS.

CONCRETE BLOCKING SHALL BE CAST IN PLACE AND HAVE A MINIMUM OF 1/4 SQUARE FOOT BEARING AGAINST THE FITTING.

BLOCK SHALL BEAR AGAINST FITTINGS ONLY AND SHALL BE CLEAR OF JOINTS TO PERMIT TAKING UP OR DISMANTLING OF JOINT.

CONTRACTOR SHALL INSTALL ADEQUATE BLOCKING TO WITHSTAND FULL TEST PRESSURE AS WELL AS TO CONTINUOUSLY WITHSTAND AND OPERATION PRESSURE UNDER ALL CONDITIONS OF SERVICE.

THRUST BLOCK – TABLE
MI. BEARING AREA AGAINST UNDISTURBED SOIL
SQUARE FEET

PIPE SIZE	A (ft.)²	B (ft.)²	C (ft.)²	D (ft.)²	E (ft.)²	X (ft.)²
4"	3	1	1	1	1	NONE
6"	4	4	2	1	1	NONE
8"	7	6	4	2	1	4
10"	11	10	6	3	2	6
12"	16	14	9	5	3	9
14"	22	19	12	6	3	12
16"	29	25	16	8	4	16
18"	36	31	20	10	5	20
20"	45	39	24	13	6	24
22"	54	47	29	15	8	29
24"	64	56	35	18	9	35
28"	87	76	48	24	12	48
30"	101	87	55	28	14	55
36"	145	125	78	40	20	78
42"	197	171	107	55	27	107
48"	257	223	140	71	36	140

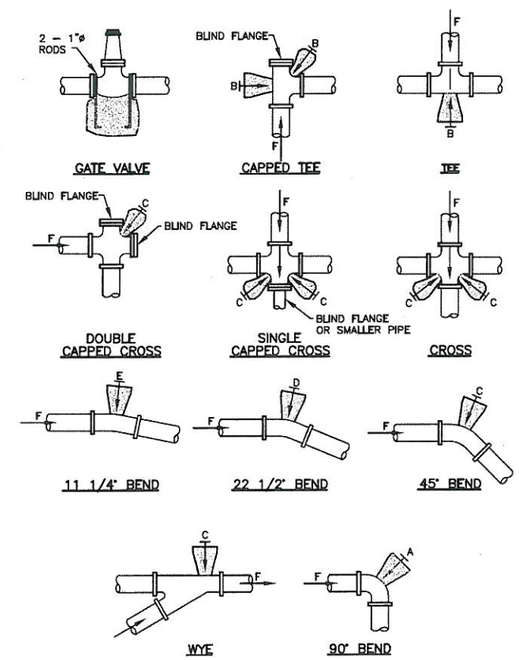

TYPICAL THRUST BLOCKS

NO SCALE

90% SUBMITTAL
NOT FOR CONSTRUCTION

HDR Fisheries DESIGN CENTER

WASHINGTON STATE
DEPARTMENT OF FISH AND WILDLIFE

SYM	DATE	REVISION DESCRIPTION	BY

APPROVED AND RELEASED FOR CONSTRUCTION

CHIEF ENGINEER ..... DATE: .....
PROGRAM ..... DATE: .....

0 —— 1"
BAR MEASURES ONE INCH ON ORIGINAL DRAWINGS

DESIGNED BY
CHECKED BY
DRAWN BY ACB
DATE December 27, 2012

HUMPTULIPS HATCHERY

POLLUTION ABATEMENT POND

CIVIL DETAILS

PROJECT NO.

SHEET 6 OF