WASHINGTON DEPARTMENT OF FISH AND WILDLIFE

Modrow Fish Trap
Trap Modifications
CZ:H28:11-1

INDEX

SHEET NO.

GENERAL
1 COVER SHEET, SYMBOLS, AND ABBREVIATIONS
2 LOCATION & VICINITY MAP
3 NOTES AND HYDROLOGY
4 PROJECT RIVER PROFILE
5 EXISTING SITE PLAN

EROSION & SEDIMENT CONTROL
6 PLAN
7 NOTES

DEMOLITION
8 PLAN

CIVIL
9 PAVING AND GRADING PLAN
10 ENLARGED PAVING AND GRADING PLAN
11 FISH RETURN PIPES PLAN
12 UPSTREAM CROSS SECTIONS
13 DOWNSTREAM CROSS SECTIONS
14 FISH RETURN PIPE PROFILES & DETAILS
15 DETAILS - I
16 DETAILS - II
17 DETAILS - III

STRUCTURAL
18 GENERAL NOTES AND ABBREVIATIONS
19 STANDARD DETAILS - I
20 STANDARD DETAILS - II
21 GENERAL ARRANGEMENT PLAN
22 HOLDING POOL - PLANS
23 HOLDING POOL - SECTIONS
24 HOLDING POOL WALLS - SECTIONS I
25 HOLDING POOL WALLS - SECTIONS II
26 HOLDING POOL WALLS - END PANEL DETAILS
27 HOLDING POOL WALLS - PANEL DETAILS I
28 HOLDING POOL WALLS - PANEL DETAILS II
29 FISH LIFT SUMP
30 LOADING DOCK AND SORTING PLATFORMS
31 TRASHRACK PANELS AND GUIDES
32 REPLACEMENT PICKETS
33 FISH SURPLUS TANK
34 FISH SURPLUS TANK - DETAILS

INDEX

SHEET NO.

MECHANICAL
35 GENERAL ARRANGEMENT PLAN
36 SECTIONS - I
37 SECTIONS - II
38 ENTRANCE GATE DETAILS - I
39 ENTRANCE GATE DETAILS - II
40 HOLDING POOL CROWDER
41 HOLDING POOL CROWDER - PLAN
42 HOLDING POOL CROWDER - REAR ELEVATION
43 HOLDING POOL CROWDER - FRONT ELEVATION
44 HOLDING POOL CROWDER - END ELEVATION
45 FISH LIFT AND VERTICAL CROWDER PANEL
46 FISH LIFT ENLARGEMENT AND HINGE ASS'Y
47 FISH LIFT AND VCP DETAILS - I
48 FISH LIFT AND VCP DETAILS - II
49 FISH LIFT AND VCP DETAILS - III
50 FISH LIFT AND VCP DETAILS - IV
51 FISH LIFT AND VCP DETAILS - V
52 FISH LIFT AND VCP DETAILS - VI
53 FISH LIFT AND VCP DETAILS - VII
54 FISH LIFT TRANS/EA BASKET/SORTING TBL
55 FISH LIFT TRANS/EA BASKET
56 FISH SORTING TABLE
57 SUPPLY PUMP
58 YARD PIPING - PLAN
59 YARD PIPING - ELEVATION

ELECTRICAL
60 ELECTRICAL SYMBOLS AND ABBREVIATIONS
61 POWER AND CONTROL PLAN
62 ONE LINE DIAGRAM
63 ELECTRICAL DETAILS

ABBREVIATIONS

ALUM	–	ALUMINUM
∠	–	ANGLE
APPROX.	–	APPROXIMATELY
BM	–	BENCH MARK
℄	–	CENTERLINE
CLR.	–	CLEARANCE
CONC	–	CONCRETE
CY	–	CUBIC YARD
ø	–	DIAMETER
ELEV	–	ELEVATION
F.B.	–	FLAT BAR
F.C.	–	FISH CONDUIT
FTG	–	FOOTING
F.W.	–	FISHWAY
GALV	–	GALVANIZED
GA.	–	GAUGE
HSS	–	STRUCTURAL TUBING
ID	–	INSIDE DIAMETER
IE	–	INVERT ELEVATION
LFW	–	LOWER FISHWAY
LG	–	LONG
M.B.	–	MACHINE BOLT
MFG.	–	MANUFACTURER'S
MISC.	–	MISCELLANEOUS
MOD.	–	MODEL
OC	–	ON CENTER
OHWL	–	ORDINARY HIGH WATER LEVEL
OSB	–	ORIENTED STRAND BOARD
OD	–	OUTSIDE DIAMETER
PAV'T	–	ASPHALT CONCRETE PAVEMENT
⅊	–	PLATE
PT	–	PRESSURE TREATED
REQ'D	–	REQUIRED
SEC.	–	SECTION
S.F.	–	SQUARE FEET
SHT.	–	SHEET
SPEC'S.	–	PROJECT SPECIFICATIONS
S.S.	–	STAINLESS STEEL
STL	–	STEEL
TOF	–	TOP OF FOOTING
TOS	–	TOP OF SLAB
TOW	–	TOP OF WALL
TYP	–	TYPICAL
UFW	–	UPPER FISHWAY
W.S.	–	WATER SURFACE

SHEET SYMBOLS

DETAIL

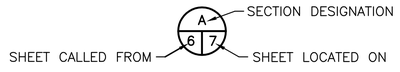

SECTION

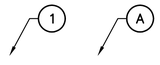

NOTE REFERENCE
REFERENCE DESIGNATION TO NOTE APPEARING ON SAME SHEET

Resource Consultants, Inc.
REDMOND, WA.

PROJECT NO.	
CZ:H28:11-1	
SHEET	OF
1	63

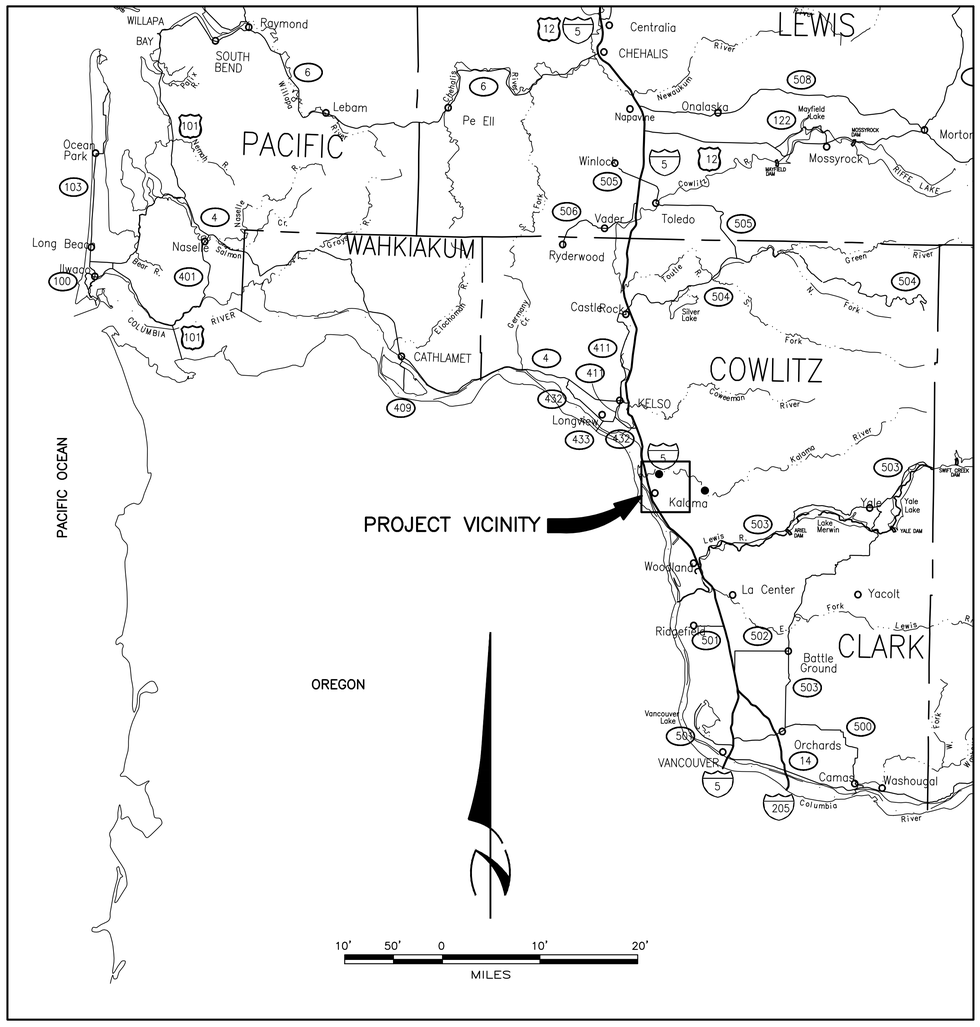

LOCATION MAP

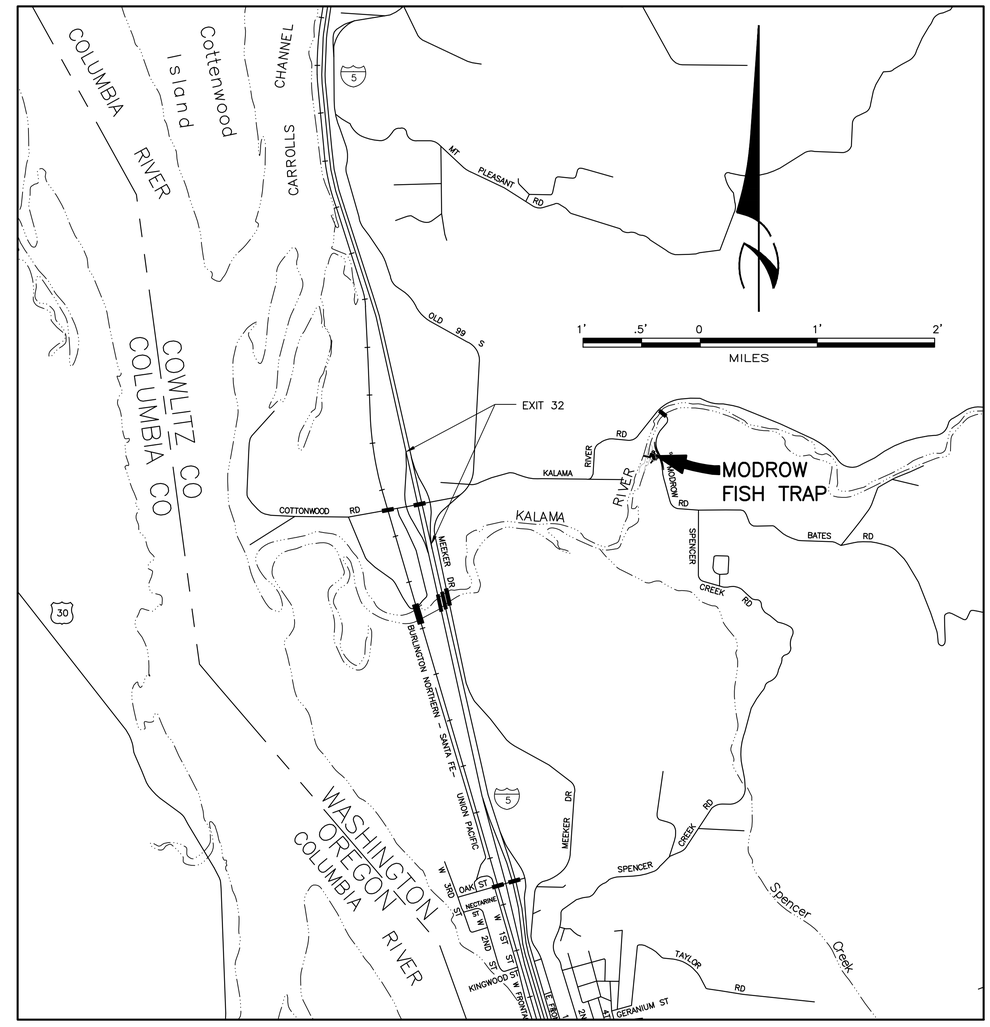

VICINITY MAP

Resource Consultants, Inc.
REDMOND, WA.

WASHINGTON STATE
DEPARTMENT OF FISH AND WILDLIFE

SYM	DATE	REVISION DESCRIPTION	BY

APPROVED AND RELEASED FOR CONSTRUCTION

CHIEF ENGINEER ..... DATE: .....
PROGRAM ..... DATE: .....

0 — 1"
BAR MEASURES ONE INCH ON ORIGINAL DRAWINGS

DESIGNED BY F. POSTLEWAITE
CHECKED BY D. TURNER
DRAWN BY J. SCHULZ
DATE 10/2011

KALAMA FALLS HATCHERY

MODROW TRAP MODIFICATIONS
GENERAL
LOCATION AND VICINITY MAPS

PROJECT NO. CZ:H28:11-1

SHEET 2 OF 63

HYDROLOGY

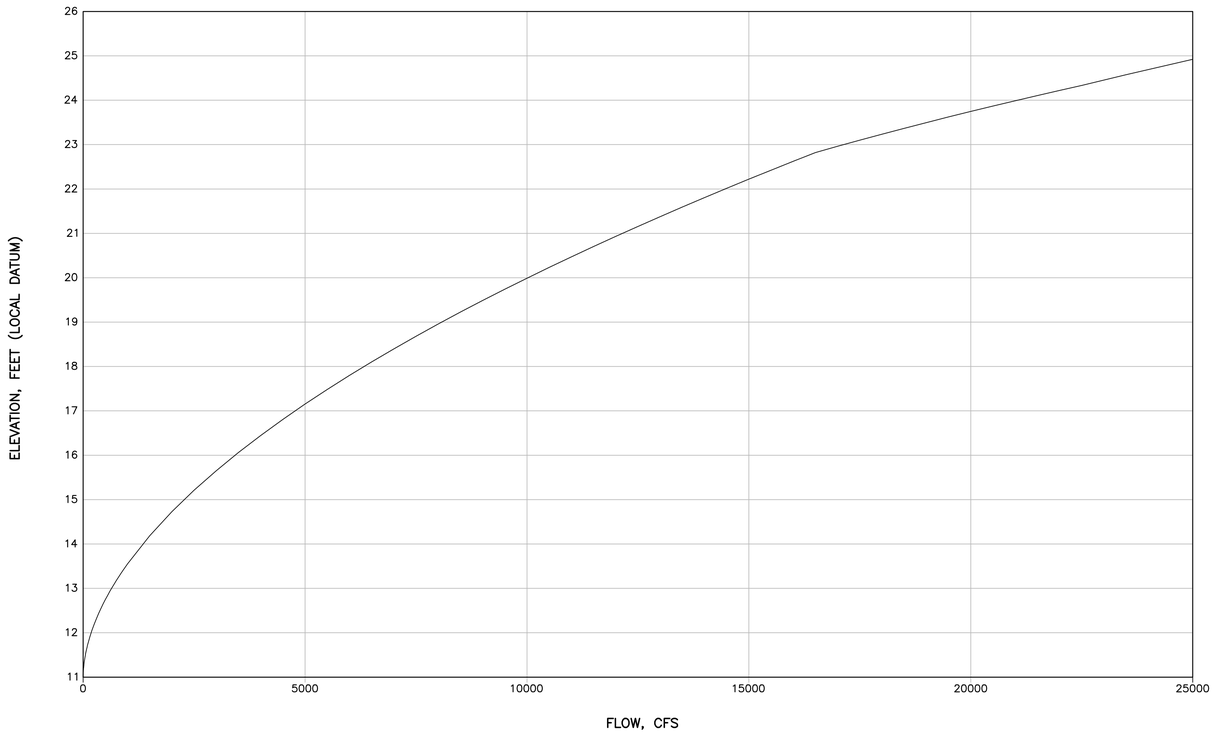

MODROW TRAP RATING CURVE

(SEE NOTE 2)
(WATER SURFACE AT TRAP ENTRANCE)

	CONSTRUCTION PERIOD										FISH TRAPPING SEASON	
	MARCH		APRIL		MAY		JUNE		JULY		AUGUST – OCTOBER	
EVENT (SEE NOTE 1)	Flow (cfs)	Stage (ft)	Flow (cfs)	Stage (ft)	Flow (cfs)	Stage (ft)	Flow (cfs)	Stage (ft)	Flow (cfs)	Stage (ft)	Flow (cfs)	Stage (ft)
95% Exceedance Flow	773	13.3	722	13.2	539	12.9	365	12.5	264	12.3	203	12.1
5% Exceedance Flow	3,900	16.5	2,930	15.7	1,930	14.7	1,410	14.2	742	13.2	1,400	14.1
2–Year Flood	4,410	16.8	3,310	16.0	2,140	14.9	1,260	14.0	669	13.1	2,660	15.4
5–Year Flood	6,850	18.4	4,750	17.1	3,130	15.8	2,010	14.8	976	13.6	4,800	17.1
10–Year Flood	8,720	19.4	5,660	17.7	3,830	16.4	2,650	15.4	1,220	13.9	6,360	18.1
50–Year Flood	13,600	21.7	7,520	18.8	5,500	17.6	4,540	16.9	1,870	14.7	9,990	20.1
100–Year Flood	16,000	22.7	8,260	19.2	6,260	18.0	5,590	17.6	2,210	15.0	11,570	20.8

NOTES:

1. FLOW ANALYSIS IS BASED ON USGS GAGES: 14223000 (1917–1932 LOCATED UPSTREAM OF MODROW BRIDGE) AND 14223500 (1947–1975 LOCATED AT THE KALAMA FALLS HATCHERY).
2. WATER SURFACE ELEVATIONS ARE BASED ON FIELD SURVEYS 9–8–2011, 10–14–2011, FEMA FLOOD MAPPING #5300320220 C, 10–15–1980, AND LOWER KALAMA RIVER OFF–CHANNEL HABITAT ASSEMENT–FINAL REPORT APRIL/2009.

GENERAL NOTES:

1. TRAP OPERATES AUGUST – OCTOBER.
2. SPECIES OF INTEREST: COHO, STEELHEAD & CHINOOK.
3. PICKET BARRIER SPACING 1.5 INCHES.

SURVEY NOTES:

1. DATUM IS LOCAL ONLY AND MATCHES THE ORIGINAL MODROW TRAP RECORD DRAWINGS DATE 1997. CONTROL POINTS ARE SHOWN ON SHEET 5.

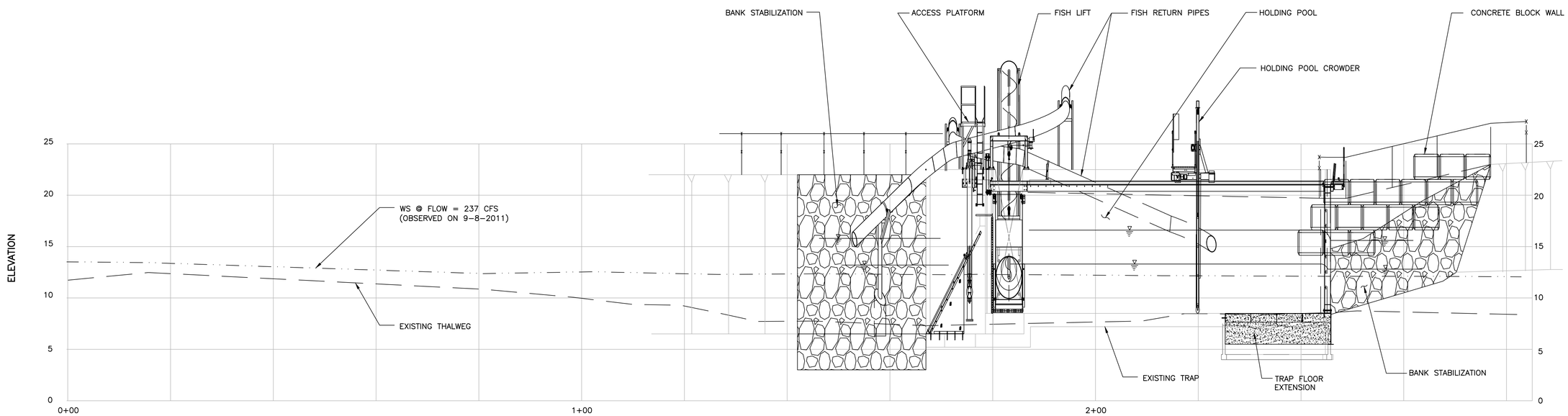

PROJECT RIVER PROFILE

SCALE: 1" = 10' HORIZ
1" = 5' VERT

Resource Consultants, Inc.
REDMOND, WA.

WASHINGTON STATE
DEPARTMENT OF FISH AND WILDLIFE

SYM	DATE	REVISION DESCRIPTION	BY

APPROVED AND RELEASED FOR CONSTRUCTION

CHIEF ENGINEER ..... DATE: .....
PROGRAM ..... DATE: .....

0 —— 1"
BAR MEASURES
ONE INCH ON
ORIGINAL DRAWINGS

DESIGNED BY F. POSTLEWAITE
CHECKED BY D. TURNER
DRAWN BY J. SCHULZ
DATE 10/2011

KALAMA FALLS HATCHERY

MODROW TRAP MODIFICATIONS
GENERAL
PROJECT RIVER PROFILE

PROJECT NO.
CZ:H28:11-1

SHEET 4 OF 63

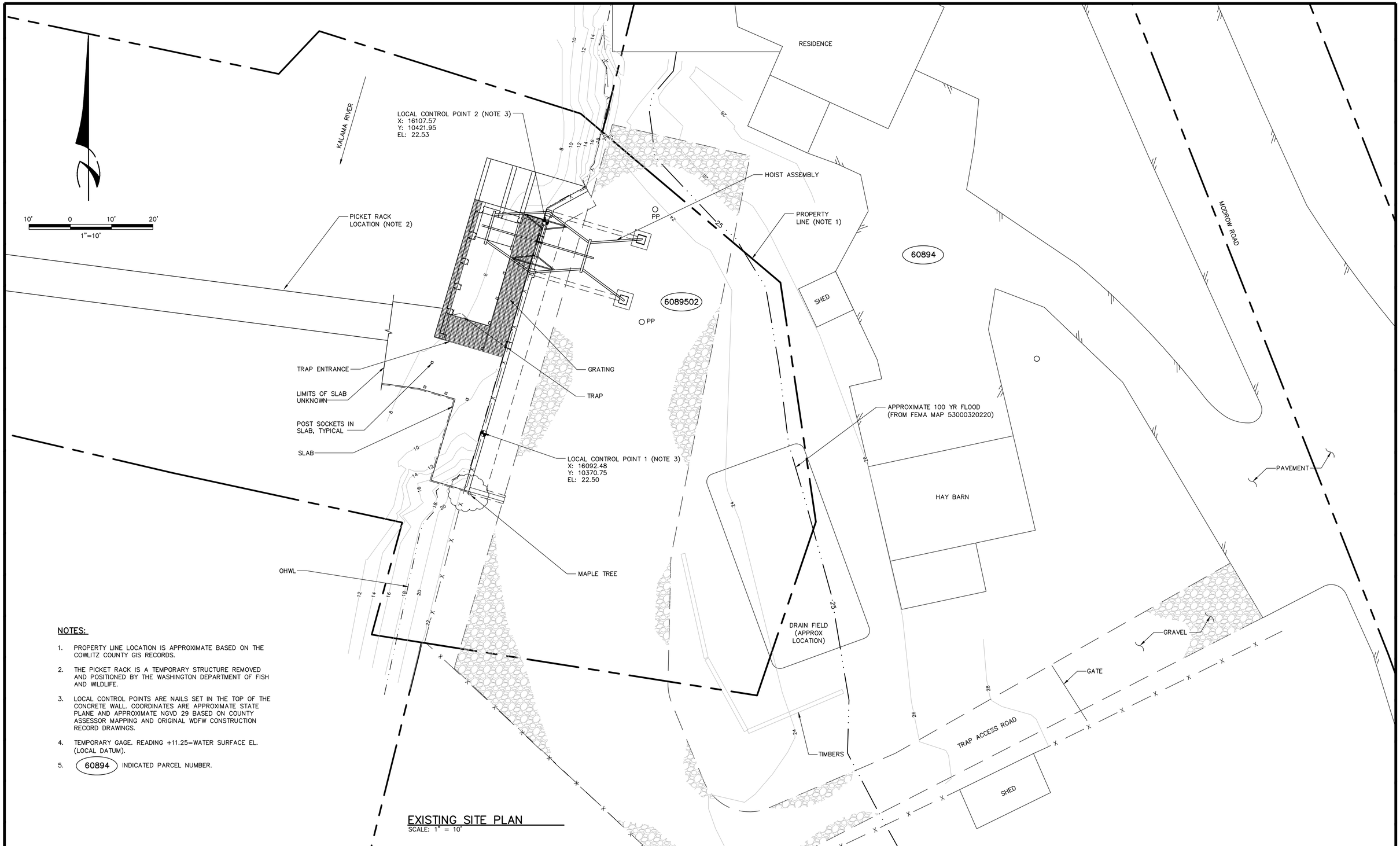

NOTES:

1. PROPERTY LINE LOCATION IS APPROXIMATE BASED ON THE COWLITZ COUNTY GIS RECORDS.
2. THE PICKET RACK IS A TEMPORARY STRUCTURE REMOVED AND POSITIONED BY THE WASHINGTON DEPARTMENT OF FISH AND WILDLIFE.
3. LOCAL CONTROL POINTS ARE NAILS SET IN THE TOP OF THE CONCRETE WALL. COORDINATES ARE APPROXIMATE STATE PLANE AND APPROXIMATE NGVD 29 BASED ON COUNTY ASSESSOR MAPPING AND ORIGINAL WDFW CONSTRUCTION RECORD DRAWINGS.
4. TEMPORARY GAGE. READING +11.25=WATER SURFACE EL. (LOCAL DATUM).
5. 60894 INDICATED PARCEL NUMBER.

EXISTING SITE PLAN
SCALE: 1" = 10'

Resource Consultants, Inc.
REDMOND, WA.

WASHINGTON STATE
DEPARTMENT OF FISH AND WILDLIFE

SYM	DATE	REVISION DESCRIPTION	BY

APPROVED AND RELEASED FOR CONSTRUCTION

CHIEF ENGINEER ..... DATE: .....
PROGRAM ..... DATE: .....

0 — 1"
BAR MEASURES ONE INCH ON ORIGINAL DRAWINGS

DESIGNED BY F. POSTLEWAITE
CHECKED BY D. TURNER
DRAWN BY J. SCHULZ
DATE 10/2011

KALAMA FALLS HATCHERY
MODROW TRAP MODIFICATIONS
GENERAL
EXISTING SITE PLAN

PROJECT NO. CZ:H28:11-1
SHEET 5 OF 63

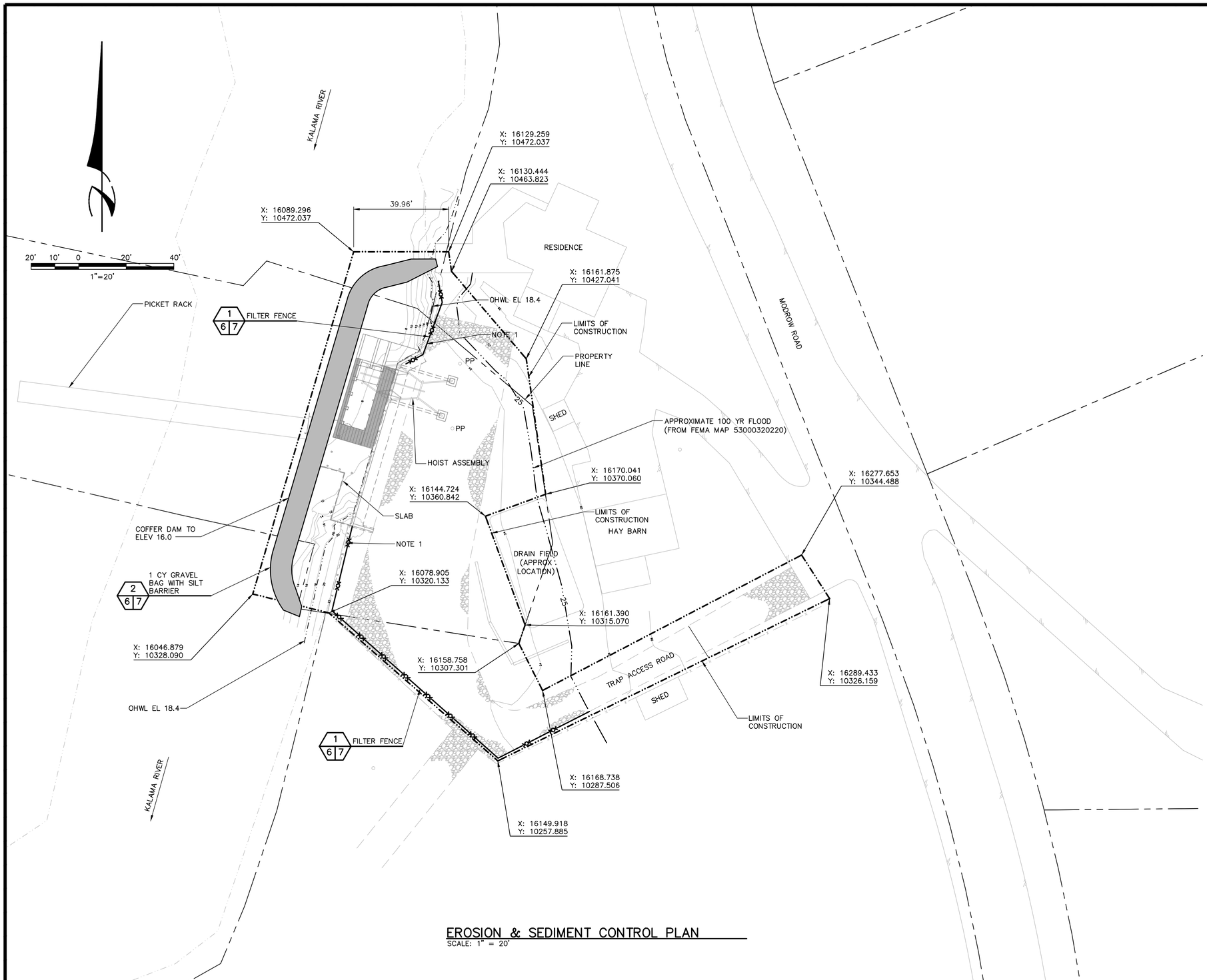

EROSION & SEDIMENT CONTROL PLAN

SCALE: 1" = 20'

NOTES:

1. MAINTAIN FILTER FENCE BEFORE AND AFTER SLOPE REGRADING.
2. A COFFERDAM TO ISOLATE THE TRAP FROM THE RIVER WILL BE REQUIRED DURING CONSTRUCTION. THE PLANS ON THIS DRAWING SHOW A POSSIBLE METHOD. THE CONTRACTOR. SHALL BE RESPONSIBLE FOR DESIGNING AND SUBMITTING A TEMPORARY COFFER DAM AND WATER HANDLING PLAN TO ALLOW FOR CONSTRUCTION OF THE IMPROVEMENTS AND COMPLY WITH PERMIT REQUIREMENTS.
3. THE ACTUAL COFFER DAM PLAN (BY THE CONTRACTOR) SHALL BE DESIGNED TO PREVENT OVERTOPPING, THE CONTRACTOR SHALL CHOSE THE LEVEL OF PROTECTION WHICH MAY BE BASED ON THE FOLLOWING FLOW CONDITIONS AND FREQUENCIES. PRESENTED ON SHEET 3.
4. ANY DAMAGE TO THE WORK RESULTING FROM FAILURE OR INADEQUACY OF THE COFFERDAM AND WATER HANDLING SYSTEM SHALL BE THE RESPONSIBILITY OF THE CONTRACTOR. THE CONTRACTOR SHALL NOT BE ENTITLED TO ANY ADDITIONAL PAYMENT FOR COSTS ASSOCIATED WITH THE COFFERDAM AND WATER HANDLING.
5. SEE SHEET 5 FOR LOCAL CONTROL REFERENCE POINTS.

Resource Consultants, Inc.
REDMOND, WA.

WASHINGTON STATE
DEPARTMENT OF FISH AND WILDLIFE

SYM	DATE	REVISION DESCRIPTION	BY

APPROVED AND RELEASED FOR CONSTRUCTION

CHIEF ENGINEER ..... DATE: .....
PROGRAM ..... DATE: .....

0 — 1"
BAR MEASURES ONE INCH ON ORIGINAL DRAWINGS

DESIGNED BY F. POSTLEWAITE
CHECKED BY D. TURNER
DRAWN BY J. SCHULZ
DATE 10/2011

KALAMA FALLS HATCHERY
MODROW TRAP MODIFICATIONS
EROSION & SEDIMENT CONTROL PLAN

PROJECT NO. CZ:H28:11-1

SHEET 6 OF 63

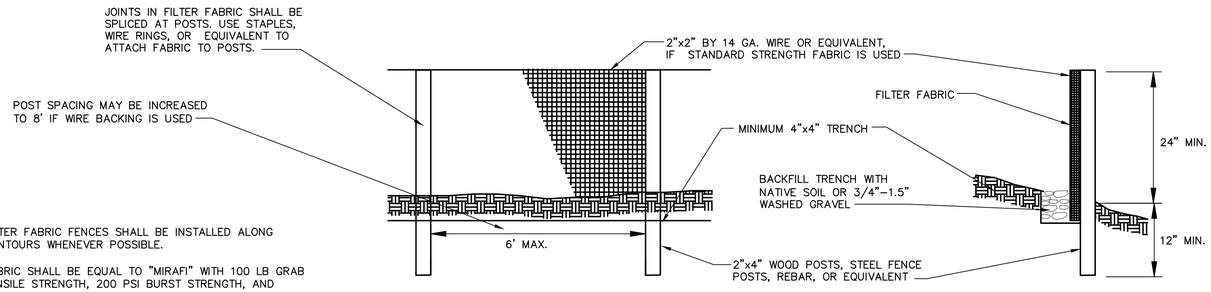

NOTES:

1. FILTER FABRIC FENCES SHALL BE INSTALLED ALONG CONTOURS WHENEVER POSSIBLE.
2. FABRIC SHALL BE EQUAL TO "MIRAFI" WITH 100 LB GRAB TENSILE STRENGTH, 200 PSI BURST STRENGTH, AND 70-200 SIEVE # APPARENT OPENING.

FILTER FENCE (1 / 6 7)
NOT TO SCALE

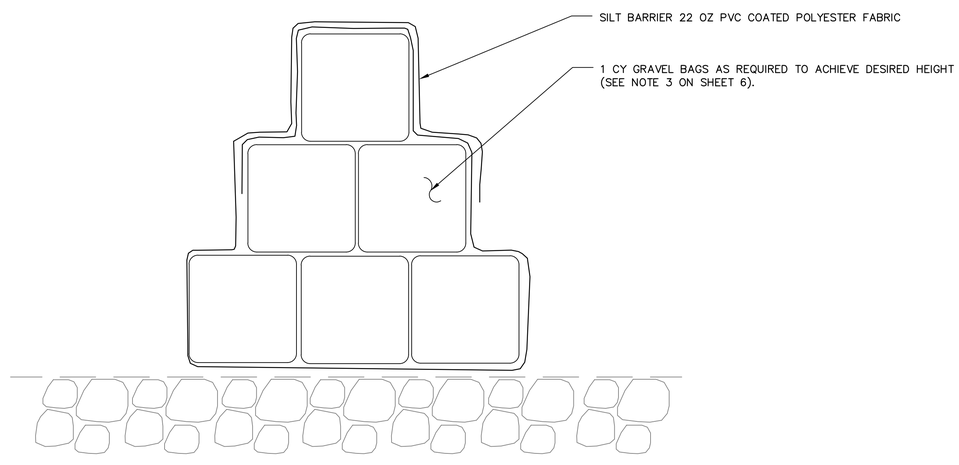

POSSIBLE COFFERDAM (2 / 6 7)
NOT TO SCALE

TEMPORARY EROSION AN SEDIMENT CONTROL NOTES

1. THE START AND END DATES OF THE IN-WATER COFFERDAM CONSTRUCTION WORK AND OTHER IN-WATER-WORK ON THE PROJECT SHALL COMPLY WITH THE PERMIT REQUIREMENTS.
2. THE WDFW AREA HABITAT BIOLOGIST ASSIGNED TO THIS PROJECT, SHALL RECEIVE WRITTEN NOTIFICATION (FAX, EMAIL, MAIL) NO LESS THAN THREE WORKING DAYS PRIOR TO THE START OF CONSTRUCTION ACTIVITIES.
3. THE TESC FACILITIES SHOWN ON THIS PLAN MUST BE CONSTRUCTED PRIOR TO OR IN CONJUNCTION WITH ALL CLEARING AND GRADING SO AS TO ENSURE THAT THE TRANSPORT OF SEDIMENT TO SURFACE WATERS, DRAINAGE SYSTEM, AND ADJACENT PROPERTIES IS MINIMIZED.
4. THE TESC FACILITIES SHOWN ON THIS PLAN ARE THE MINIMUM REQUIREMENTS FOR THE ANTICIPATED SITE CONDITIONS. DURING THE CONSTRUCTION PERIOD THESE TESC FACILITIES SHALL BE UPGRADED AS NEEDED FOR UNEXPECTED STORM EVENTS AND MODIFIED TO ACCOUNT FOR CHANGING SITE CONDITIONS
5. THE TESC FACILITIES SHALL BE INSPECTED DAILY BY THE APPLICANT/TESC SUPERVISOR AND MAINTAINED TO ENSURE CONTINUED PROPER FUNCTIONING. WRITTEN RECORDS SHALL BE KEPT OF WEEKLY REVIEWS OF THE TESC FACILITIES DURING CONSTRUCTION.
6. ANY AREAS OF EXPOSED SOILS, INCLUDING ROADWAY EMBANKMENTS, THAT WILL NOT BE DISTURBED FOR TWO DAYS DURING THE WET SEASON OR SEVEN DAY DURING THE DRY SEASON SHALL BE IMMEDIATELY STABILIZED WITH THE APPROVED TESC METHODS (E.G. SEEDING, MULCHING, PLASTIC COVERING. ETC.).
7. THE TESC FACILITIES ON INACTIVE SITES SHALL BE INSPECTED AND MAINTAINED A MINIMUM OF ONCE A MONTH OR WITHIN 48 HOURS OF FOLLOWING A STORM EVENT.
8. WHERE STRAW MULCH FOR TEMPORARY EROSION CONTROL IS REQUIRED, IT SHALL BE APPLIED AT A MINIMUM 2-INCH THICKNESS.
9. THE COFFERDAMS SHALL BE COMPLETELY SEALED TO PREVENT CONCRETE OR OTHER DELETERIOUS PRODUCTS FROM LEACHING INTO THE RIVER. UPON COMPLETION OF THE PROJECT, ALL COFFERDAM MATERIALS SHALL BE REMOVED.
10. ALL WASTE MATERIAL SUCH AS CONSTRUCTION DEBRIS, SILT, EXCESS DIRT OR OVERBURDEN RESULTING FROM THIS PROJECT SHALL BE DEPOSITED ABOVE THE LIMITS OF FLOODWATER IN AN APPROVED UPLAND DISPOSAL SITE.
11. WASTEWATER FROM PROJECT ACTIVITIES AND WATER REMOVED FROM IN THE WORK AREA SHALL BE ROUTED TO AN AREA UPLAND OF THE ORDINARY HIGH WATER LINE TO ALL REMOVAL OF FINE SEDIMENT AND OTHER CONTAMINANTS PRIOR TO DISCHARGE INTO THE RIVER.
12. MAINTENANCE AND FUELING OF CONSTRUCTION EQUIPMENT SHALL BE PERFORMED IN SUCH A MANNER TO MINIMIZE THE POTENTIAL CONTAMINATION OF STORMWATER RUNOFF AND ADJACENT WATERWAYS. SPILL CONTAINMENT AND CLEANUP KITS SHALL BE MAINTAINED ONSITE AND ANY SPILLS OF FUELS, HYDRAULIC FLUID, LUBRICANTS, OR OTHER HAZARDOUS MATERIAL SHALL BE CLEANED UP AND IMMEDIATELY AND PROPERLY DISPOSED OF.
13. EQUIPMENT USED FOR THIS PROJECT SHALL BE FREE OF EXTERNAL PETROLEUM-BASED PRODUCTS WHILE WORKING NEAR THE RIVER. ACCUMULATION OF SOIL AND DEBRIS SHALL BE REMOVED FROM THE DRIVE MECHANISMS AND THE UNDERCARRIAGE OF EQUIPMENT PRIOR TO ITS WORKING INSIDE THE COFFERDAMS. EQUIPMENT SHALL BE CHECKED DAILY FOR LEAKS AND ANY NECESSARY REPAIRS SHALL BE COMPLETED PRIOR TO COMMENCING WORK ACTIVITIES NEAR THE RIVER.
14. EXCAVATION EQUIPMENT WILL WORK FROM ABOVE THE EXCAVATION AND DIG UPSLOPE TOWARDS THEM. EXCAVATED MATERIAL WILL BE PLACED DIRECTLY INTO TRUCKS AND HAULED OFFSITE.
15. RESTORE UNDEVELOPED DISTURBED AREAS ON THE BANK OF THE KALAMA RIVER WITH WEIGHTED JUTE MATTING.
16. BAKER TANKS SILT BAGS WILL BE USED FOR THE COLLECTION OF WATER FROM THE COFFERDAMS AND DEEP EXCAVATIONS TO PREVENT DISCHARGING HIGH TURBIDITY WATER INTO THE RIVER.

RECOMMENDED CONSTRUCTION SEQUENCE:

1. PRE-CONSTRUCTION MEETING.
2. FLAG OR FENCE CONSTRUCTION LIMITS.
3. INSTALL PERIMETER PROTECTION (SILT FENCE, BRUSH BARRIER, ETC.)
4. GRADE AND STABILIZE CONSTRUCTION ROADS.
5. INSTALL COFFERDAM AND WATER HANDLING SYSTEM.
6. MAINTAIN EROSION CONTROL MEASURES IN ACCORDANCE WITH THE REQUIRED TECHNIQUES AND FREQUENCY.
7. JUST PRIOR TO THE PROJECT COMPLETION, ENSURE ALL DISTURBED AREAS ARE STABILIZED AND REMOVE TESC FEATURE IF APPROPRIATE (PERIMETER MARKING, FILTER FENCING, SEDIMENT TRAPS, ETC.).

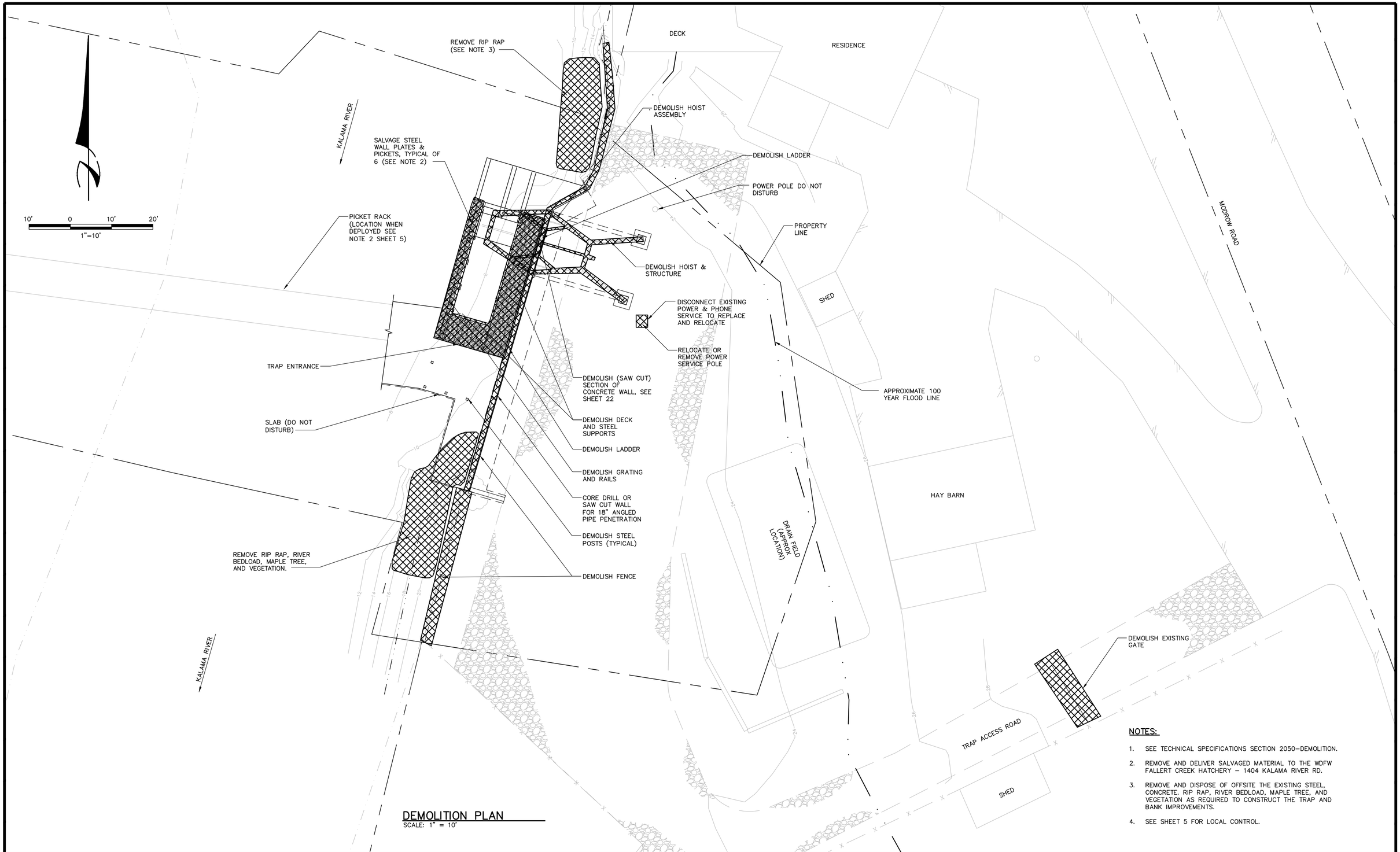

DEMOLITION PLAN

SCALE: 1" = 10'

NOTES:

1. SEE TECHNICAL SPECIFICATIONS SECTION 2050–DEMOLITION.
2. REMOVE AND DELIVER SALVAGED MATERIAL TO THE WDFW FALLERT CREEK HATCHERY – 1404 KALAMA RIVER RD.
3. REMOVE AND DISPOSE OF OFFSITE THE EXISTING STEEL, CONCRETE. RIP RAP, RIVER BEDLOAD, MAPLE TREE, AND VEGETATION AS REQUIRED TO CONSTRUCT THE TRAP AND BANK IMPROVEMENTS.
4. SEE SHEET 5 FOR LOCAL CONTROL.

Resource Consultants, Inc.
REDMOND, WA.

WASHINGTON STATE
DEPARTMENT OF FISH AND WILDLIFE

SYM	DATE	REVISION DESCRIPTION	BY

APPROVED AND RELEASED FOR CONSTRUCTION

CHIEF ENGINEER ..... DATE: .....
PROGRAM ..... DATE: .....

0 — 1"
BAR MEASURES ONE INCH ON ORIGINAL DRAWINGS

DESIGNED BY F. POSTLEWAITE
CHECKED BY D. TURNER
DRAWN BY J. SCHULZ
DATE 10/2011

KALAMA FALLS HATCHERY

MODROW TRAP MODIFICATIONS
DEMOLITION
PLAN

PROJECT NO. CZ:H28:11–1

SHEET 8 OF 63

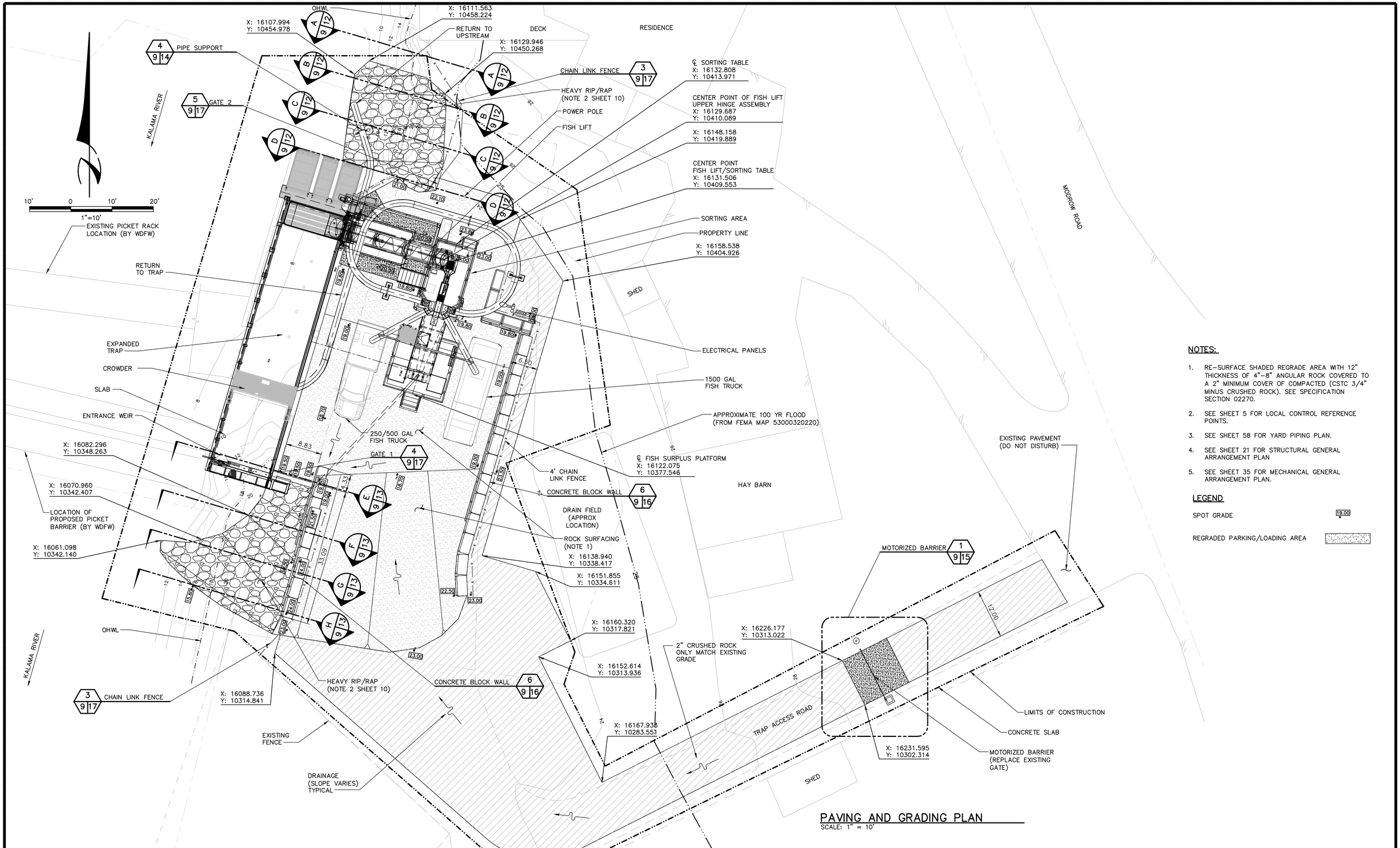

PAVING AND GRADING PLAN

SCALE: 1" = 10'

NOTES:

1. RE-SURFACE SHADED REGRADE AREA WITH 12" THICKNESS OF 4"-8" ANGULAR ROCK COVERED TO A 2" MINIMUM COVER OF COMPACTED (CSTC 3/4" MINUS CRUSHED ROCK). SEE SPECIFICATION SECTION 02270.
2. SEE SHEET 5 FOR LOCAL CONTROL REFERENCE POINTS.
3. SEE SHEET 58 FOR YARD PIPING PLAN.
4. SEE SHEET 21 FOR STRUCTURAL GENERAL ARRANGEMENT PLAN
5. SEE SHEET 35 FOR MECHANICAL GENERAL ARRANGEMENT PLAN.

LEGEND

SPOT GRADE 19.00

REGRADED PARKING/LOADING AREA

Resource Consultants, Inc.
REDMOND, WA.

WASHINGTON STATE
DEPARTMENT OF FISH AND WILDLIFE

SYM	DATE	REVISION DESCRIPTION	BY

APPROVED AND RELEASED FOR CONSTRUCTION

CHIEF ENGINEER ..... DATE: .....
PROGRAM ..... DATE: .....

0 — 1"
BAR MEASURES ONE INCH ON ORIGINAL DRAWINGS

DESIGNED BY F. POSTLEWAITE
CHECKED BY D. TURNER
DRAWN BY J. SCHULZ
DATE 10/2011

KALAMA FALLS HATCHERY
MODROW TRAP MODIFICATIONS
CIVIL
PAVING AND GRADING PLAN

PROJECT NO. CZ:H28:11-1

SHEET 9 OF 63

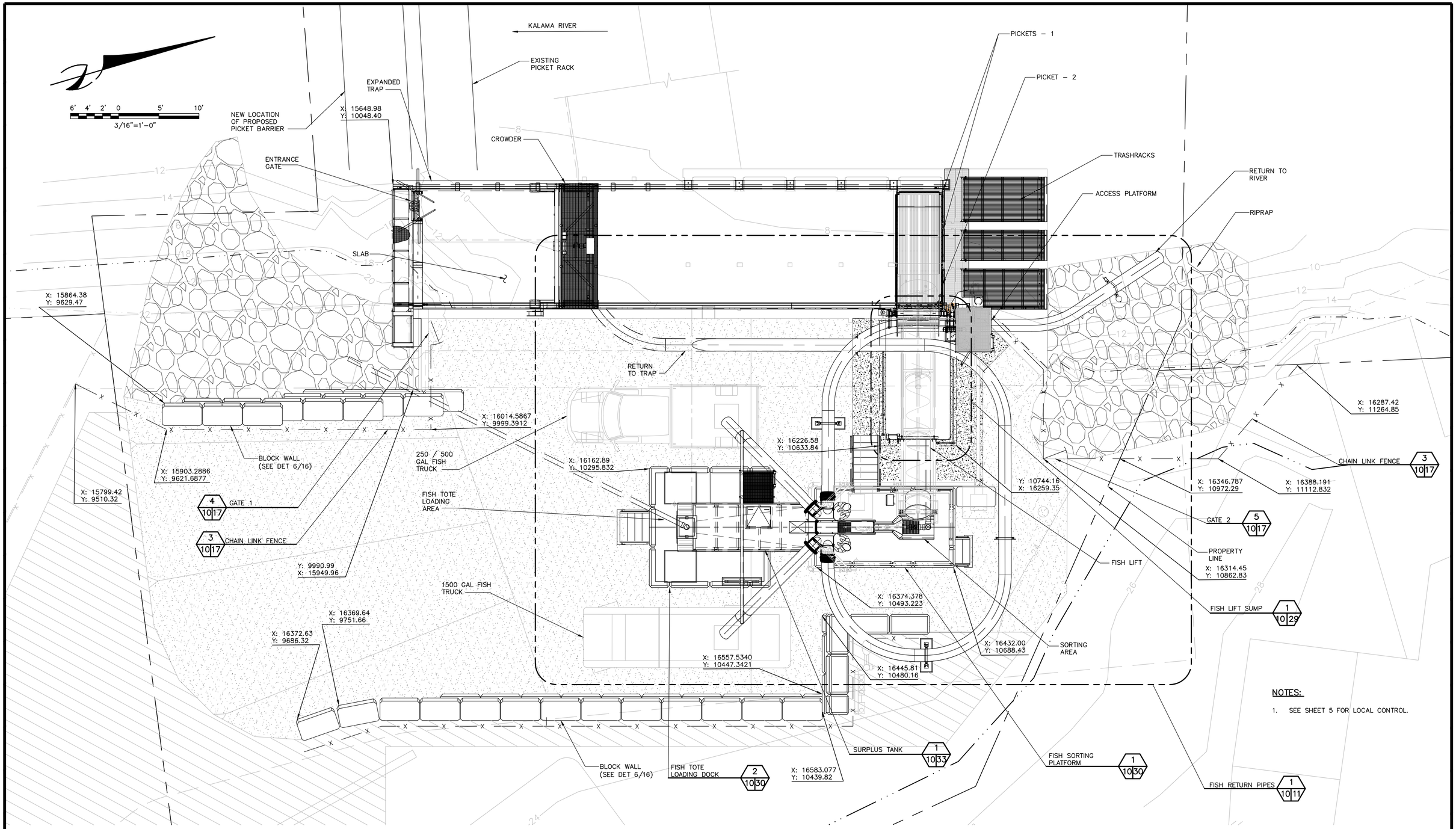

ENLARGED PAVING AND GRADING PLAN

SCALE: 3/21" = 1'-0"

Resource Consultants, Inc.
REDMOND, WA.

WASHINGTON STATE
DEPARTMENT OF FISH AND WILDLIFE

SYM	DATE	REVISION DESCRIPTION	BY

APPROVED AND RELEASED FOR CONSTRUCTION

CHIEF ENGINEER ..... DATE: .....
PROGRAM ..... DATE: .....

0 — 1"
BAR MEASURES ONE INCH ON ORIGINAL DRAWINGS

DESIGNED BY F. POSTLEWAITE
CHECKED BY D. TURNER
DRAWN BY J. SCHULZ
DATE 10/2011

KALAMA FALLS HATCHERY

MODROW TRAP MODIFICATIONS
CIVIL
ENLARGED PAVING AND GRADING PLAN

PROJECT NO. CZ:H28:11–1

SHEET 10 OF 63

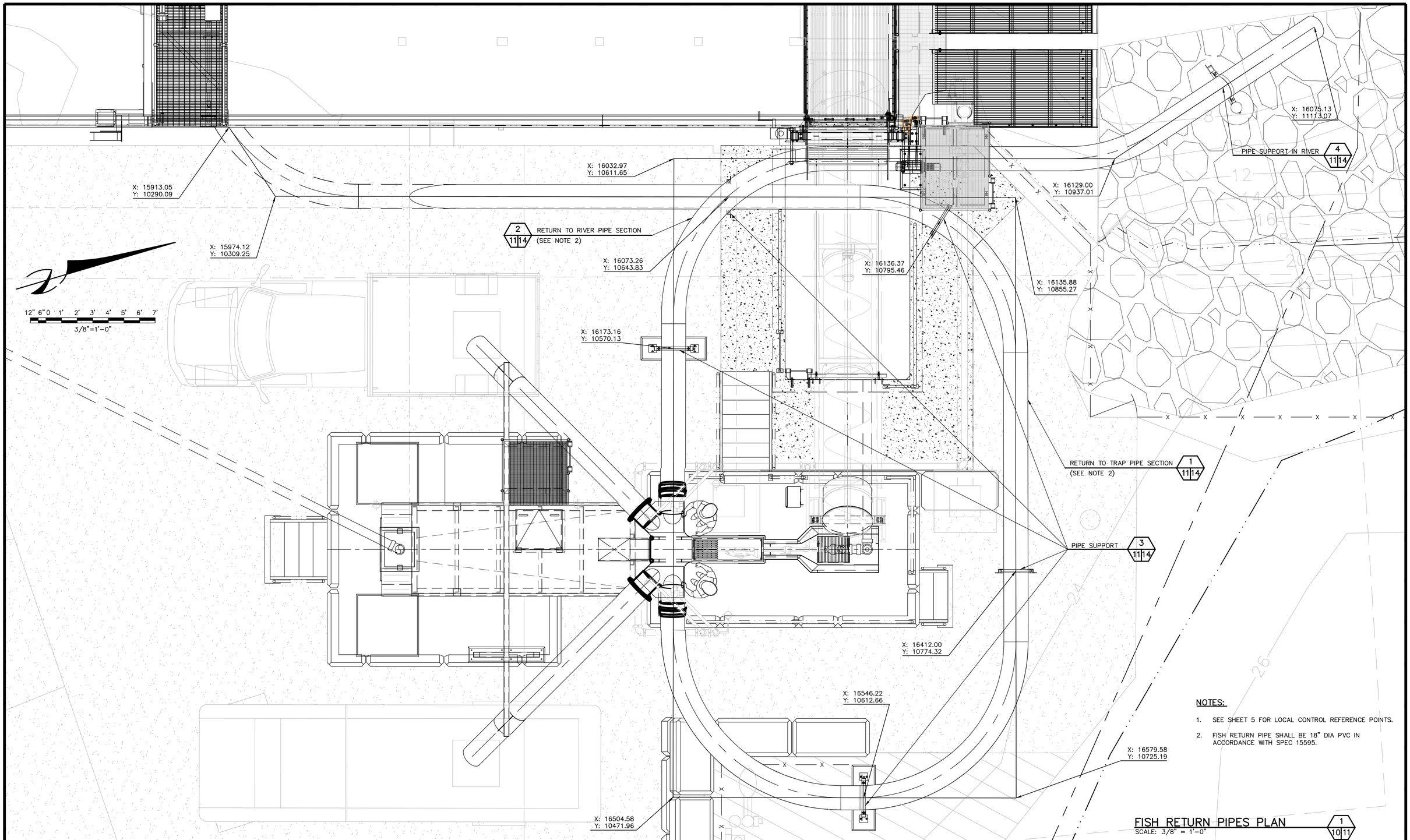

Resource Consultants, Inc.
REDMOND, WA.

WASHINGTON STATE
DEPARTMENT OF FISH AND WILDLIFE

SYM	DATE	REVISION DESCRIPTION	BY

APPROVED AND RELEASED FOR CONSTRUCTION

CHIEF ENGINEER ..... DATE: .....
PROGRAM ..... DATE: .....

0 —— 1"
BAR MEASURES ONE INCH ON ORIGINAL DRAWINGS

DESIGNED BY F. POSTLEWAITE
CHECKED BY D. TURNER
DRAWN BY J. SCHULZ
DATE 10/2011

KALAMA FALLS HATCHERY

MODROW TRAP MODIFICATIONS
CIVIL
FISH RETURN PIPES PLAN

PROJECT NO. CZ:H28:11-1

SHEET 11 OF 63

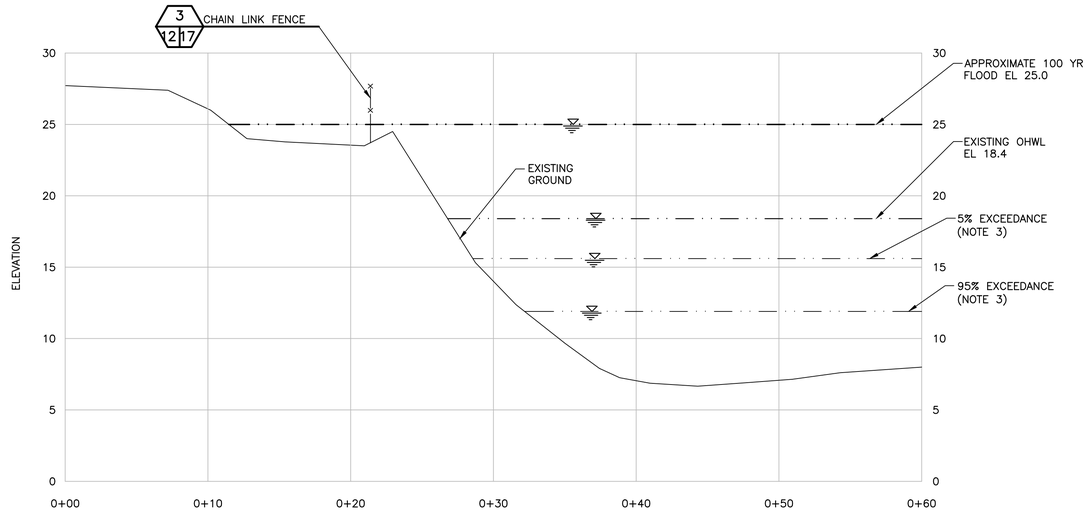

SECTION A 9 12
SCALE: 1" = 5'

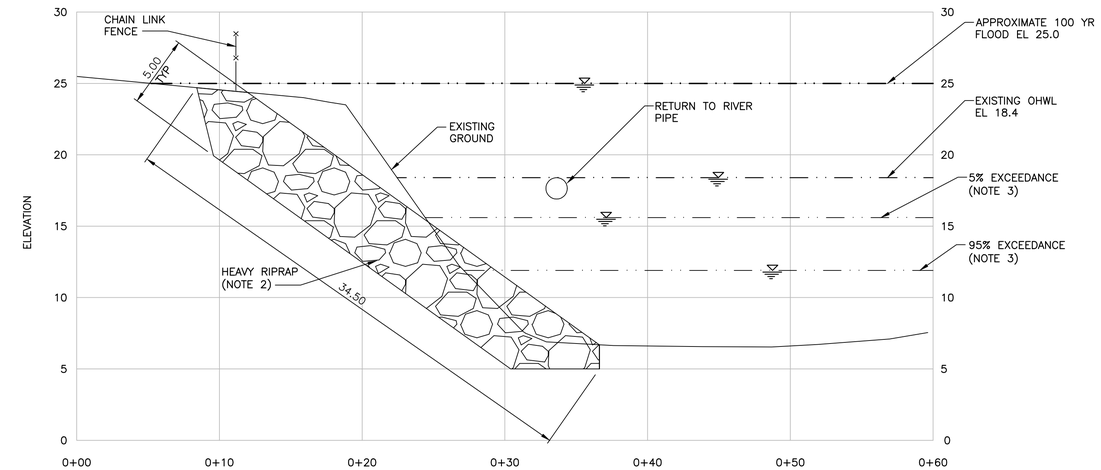

SECTION C 9 12
SCALE: 1" = 5'

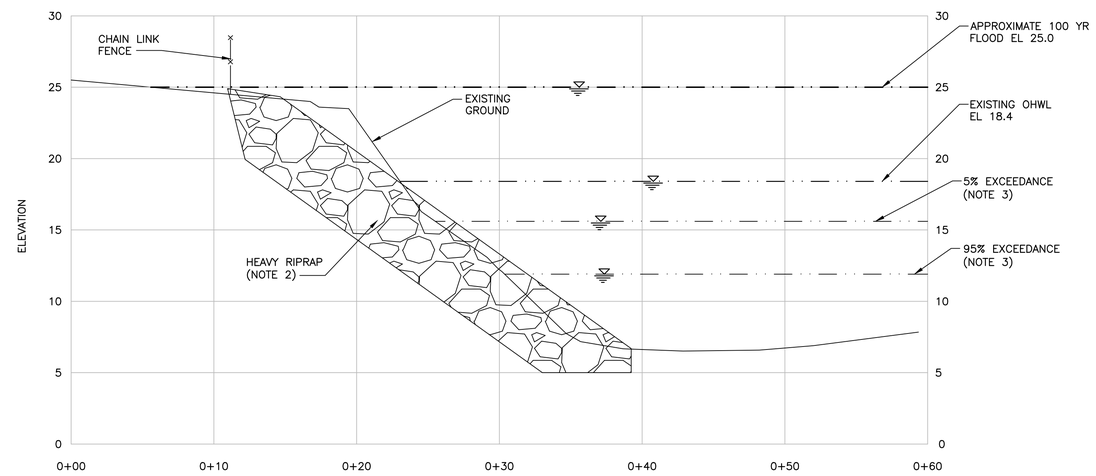

SECTION B 9 12
SCALE: 1" = 5'

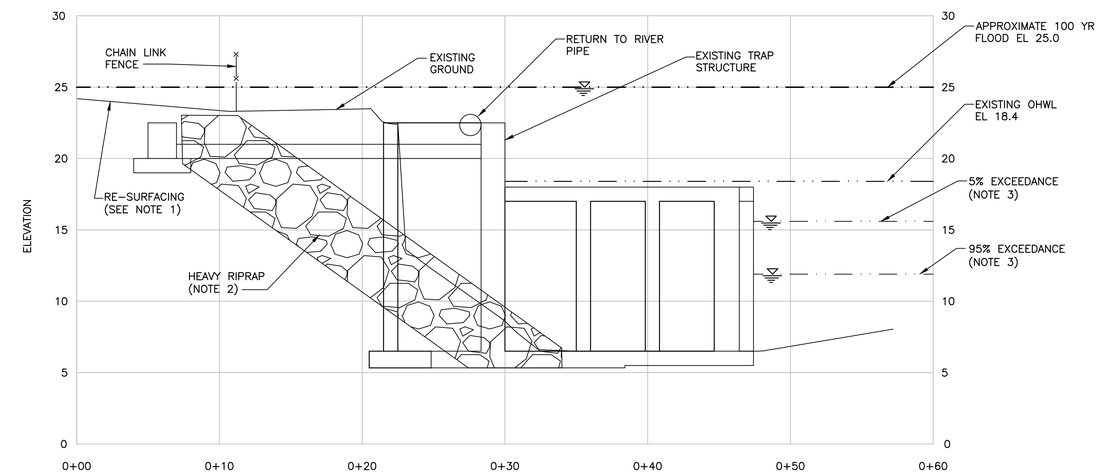

SECTION D 9 12
SCALE: 1" = 5'

NOTES:

1. RE-SURFACE REGRADE WITH 12" THICKNESS OF 4"-8" ANGULAR ROCK COVERED TO A 2" MINIMUM COVER OF COMPACTED (CSTC 3/4" MINUS CRUSHED ROCK). SEE SPECIFICATION SECTION 02270.
2. HEAVY RIPRAP. SET ROCK AT 1.35 HORIZONTAL TO 1 VERTICAL SLOPE. SEE SPECIFICATIONS SECTION 02270.
3. EXCEEDANCE CONDITIONS DURING TRAP OPERATION AUGUST – OCTOBER. SEE SHEET 3.

Resource Consultants, Inc.
REDMOND, WA.

WASHINGTON STATE
DEPARTMENT OF FISH AND WILDLIFE

SYM.	DATE	REVISION DESCRIPTION	BY

APPROVED AND RELEASED FOR CONSTRUCTION
CHIEF ENGINEER ..... DATE: .....
PROGRAM ..... DATE: .....

0 — 1"
BAR MEASURES ONE INCH ON ORIGINAL DRAWINGS

DESIGNED BY F. POSTLEWAITE
CHECKED BY D. TURNER
DRAWN BY B. GOCHENOUR
DATE 10/2011

KALAMA FALLS HATCHERY
MODROW TRAP MODIFICATIONS
CIVIL
UPSTREAM CROSS SECTIONS

PROJECT NO. CZ:H28:11-1
SHEET 12 OF 63

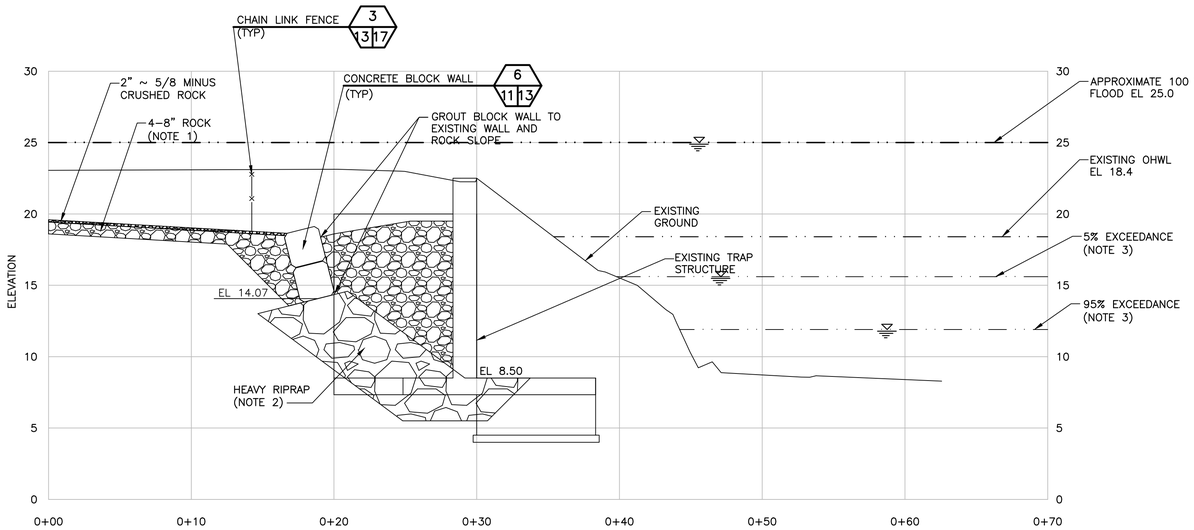

SECTION E
SCALE: 1" = 5'
9 13

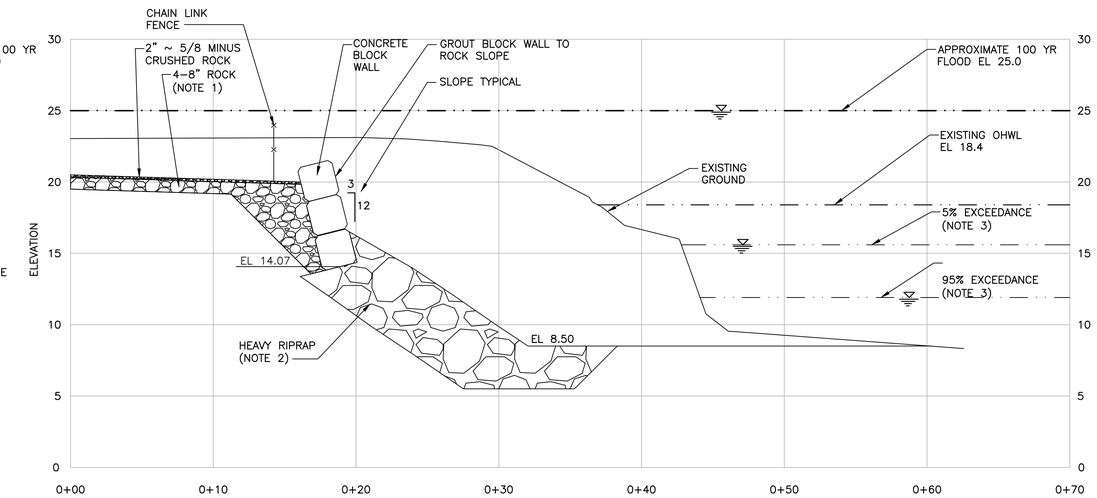

SECTION F
SCALE: 1" = 5'
9 13

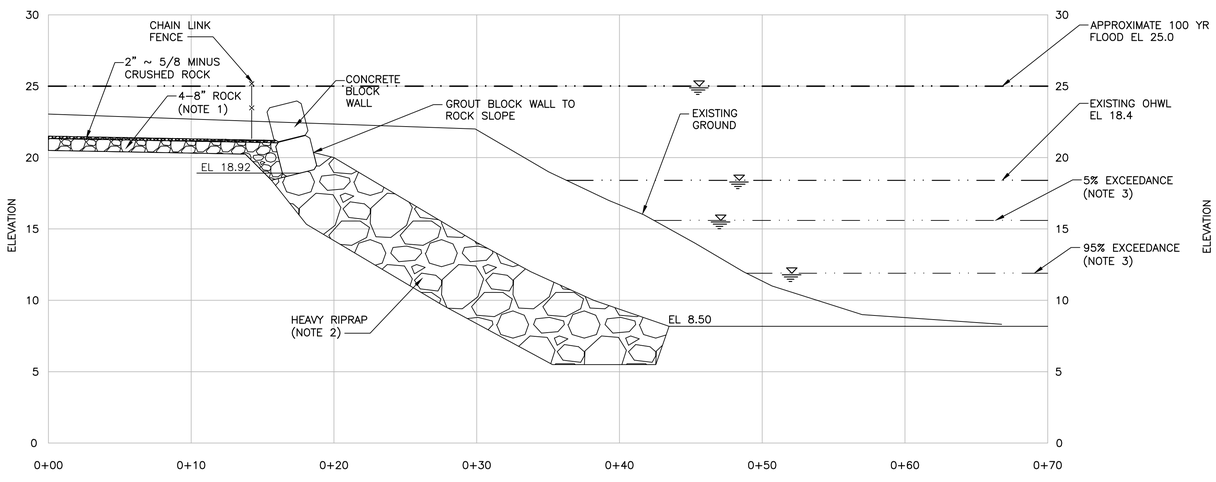

SECTION G
SCALE: 1" = 5'
9 13

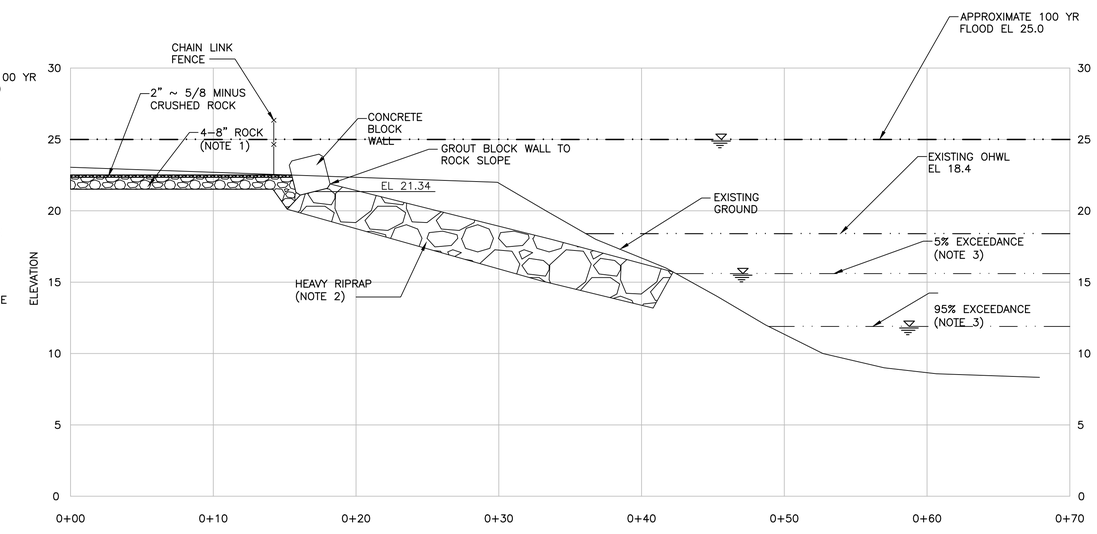

SECTION H
SCALE: 1" = 5'
9 13

NOTES:

1. RE-SURFACE REGRADE WITH 12" THICKNESS OF 4"-8" ANGULAR ROCK COVERED TO A 2" MINIMUM COVER OF COMPACTED (CSTC 3/4" MINUS CRUSHED ROCK). SEE SPECIFICATION SECTION 02270.
2. HEAVY RIPRAP. SET ROCK AT 1.35 HORIZONTAL TO 1 VERTICAL SLOPE. SEE SPECIFICATIONS SECTION 02270.
3. EXCEEDANCE CONDITIONS DURING TRAP OPERATION AUGUST – OCTOBER. SEE SHEET 3.
4. SEE SHEET 58 FOR YARD PIPING PLAN.

Resource Consultants, Inc.
REDMOND, WA.

WASHINGTON STATE
DEPARTMENT OF FISH AND WILDLIFE

SYM	DATE	REVISION DESCRIPTION	BY

APPROVED AND RELEASED FOR CONSTRUCTION
CHIEF ENGINEER ..... DATE: .....
PROGRAM ..... DATE: .....

0 — 1"
BAR MEASURES ONE INCH ON ORIGINAL DRAWINGS

DESIGNED BY F. POSTLEWAITE
CHECKED BY D. TURNER
DRAWN BY B. GOCHENOUR
DATE 10/2011

KALAMA FALLS HATCHERY
MODROW TRAP MODIFICATIONS
CIVIL
DOWNSTREAM CROSS SECTIONS

PROJECT NO. CZ:H28:11-1
SHEET 13 OF 63

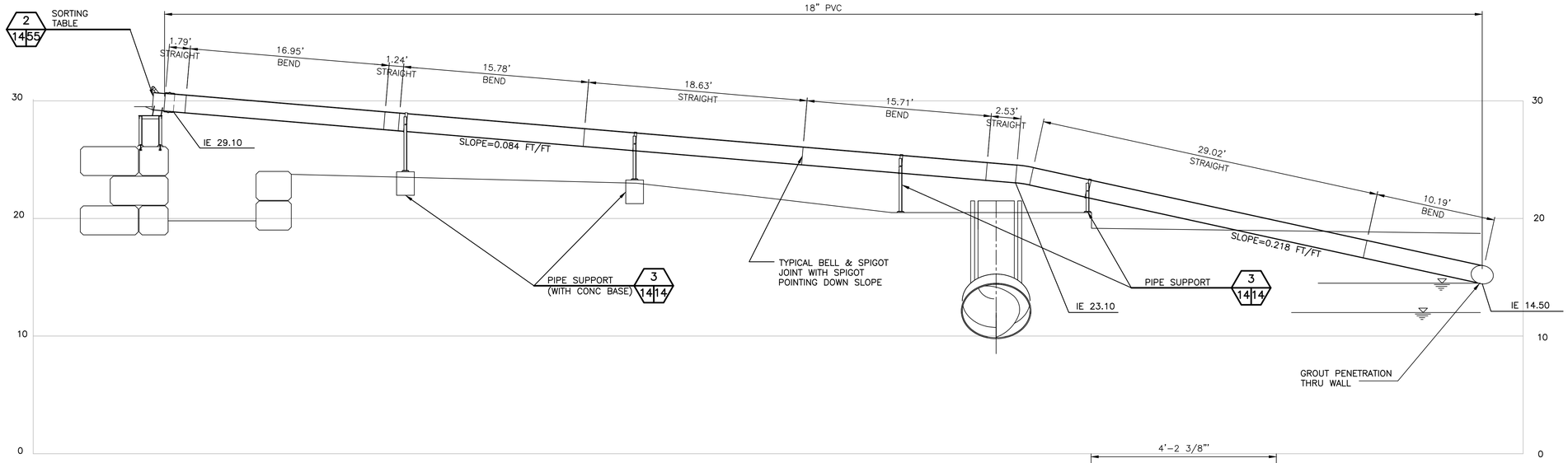

RETURN TO TRAP PIPE SECTION 1 11 14
SCALE: 1" = 5'

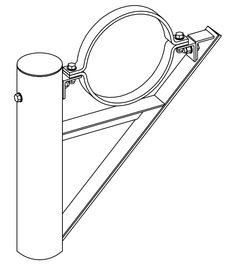

ISOMETRIC

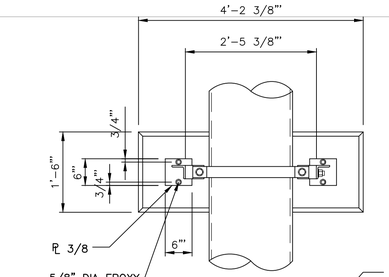

PLAN

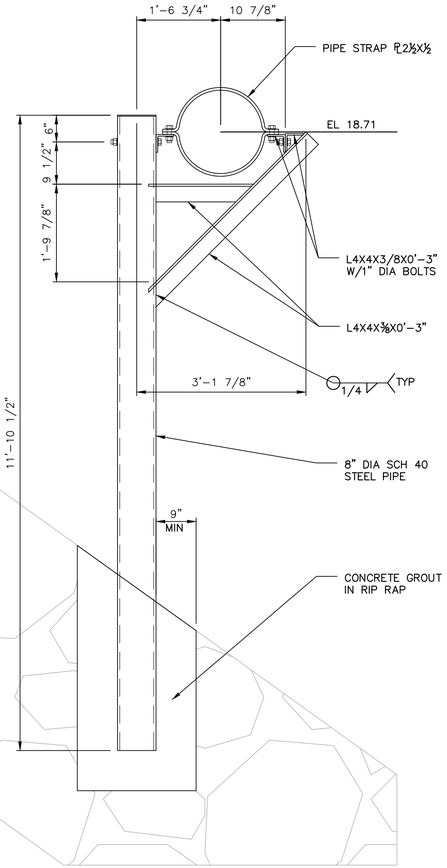

SECTION

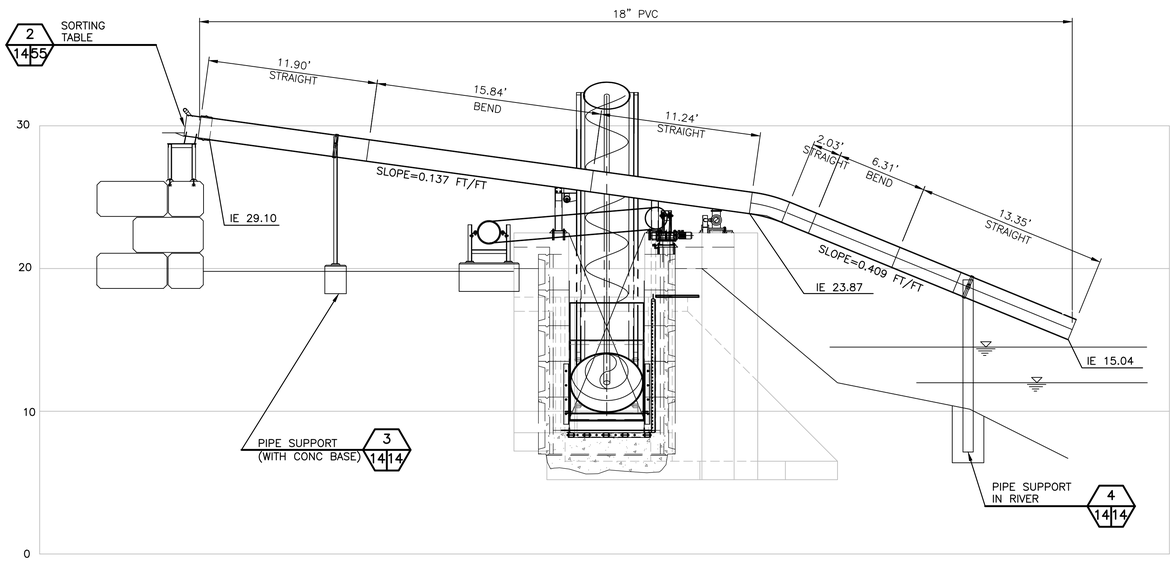

RETURN TO RIVER PIPE SECTION 2 11 14
SCALE: 1" = 5'

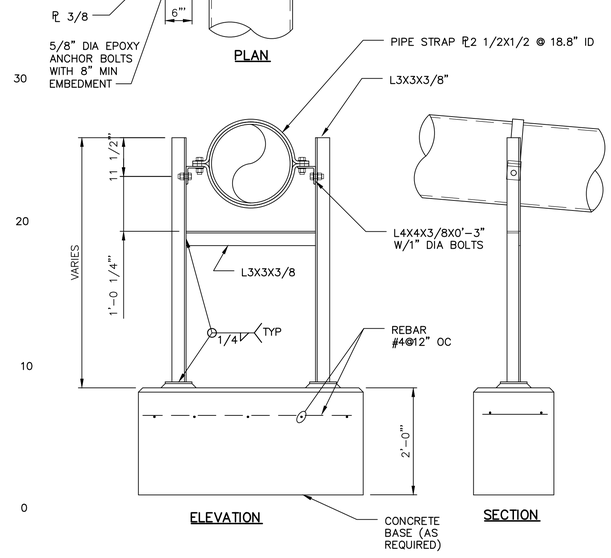

ELEVATION

SECTION

DETAIL – PIPE SUPPORT 3 11 14 3 14 14
SCALE: 3/4" = 1'-0"

DETAIL – PIPE SUPPORT IN RIVER 4 9 14 4 11 14
SCALE: 3/4" = 1'-0"

NOTES:

1. FINISH PIPE SUPPORTS WITH HOT DIP GALVANIZING.
2. FISH RETURN PIPE SHALL BE 18" DIA PVC IN ACCORDANCE WITH SPEC 15595.

Resource Consultants, Inc.
REDMOND, WA.

WASHINGTON STATE
DEPARTMENT OF FISH AND WILDLIFE

SYM	DATE	REVISION DESCRIPTION	BY

APPROVED AND RELEASED FOR CONSTRUCTION
CHIEF ENGINEER ..... DATE: .....
PROGRAM ..... DATE: .....

0 — 1"
BAR MEASURES ONE INCH ON ORIGINAL DRAWINGS

DESIGNED BY F. POSTLEWAITE
CHECKED BY D. TURNER
DRAWN BY J. SCHULZ
DATE 10/2011

KALAMA FALLS HATCHERY
MODROW TRAP MODIFICATIONS
CIVIL
FISH RETURN PIPE PROFILES & DETAILS

PROJECT NO. CZ:H28:11-1
SHEET 14 OF 63

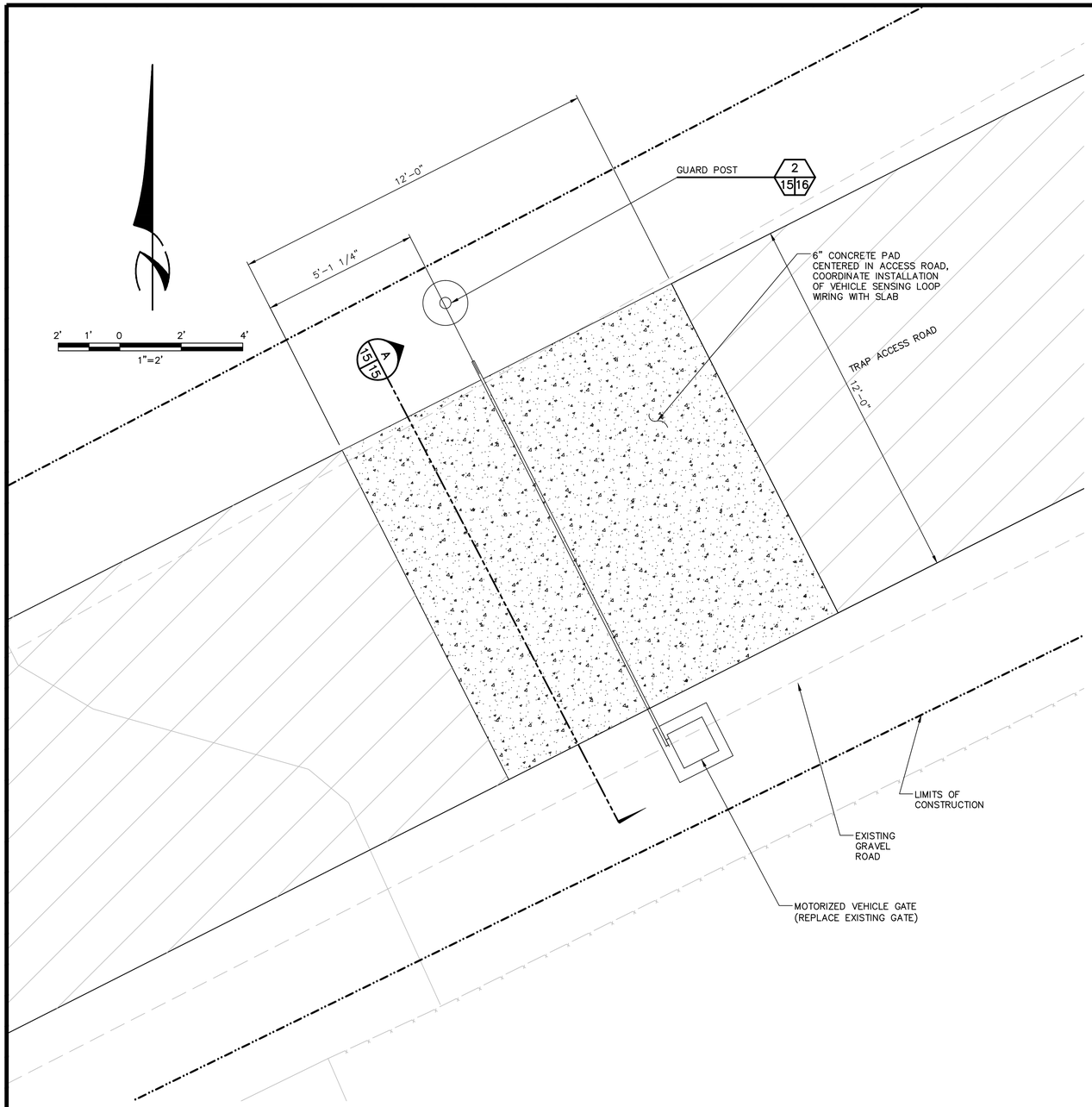

DETAIL – MOTORIZED VEHICLE GATE
SCALE: 1" = 2'-0"
1
9 15

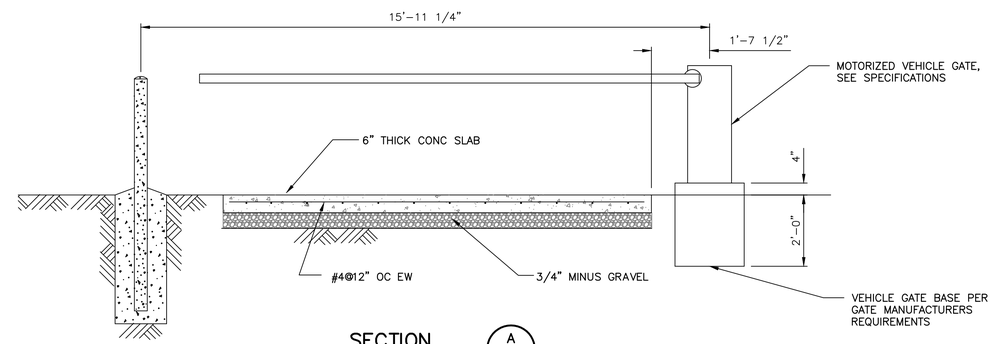

SECTION
SCALE: 1/2" = 1'-0"
A
15 15

Resource Consultants, Inc.
REDMOND, WA.

WASHINGTON STATE
DEPARTMENT OF FISH AND WILDLIFE

SYM	DATE	REVISION DESCRIPTION	BY

APPROVED AND RELEASED FOR CONSTRUCTION
CHIEF ENGINEER ..... DATE: .....
PROGRAM ..... DATE: .....

0 — 1"
BAR MEASURES ONE INCH ON ORIGINAL DRAWINGS

DESIGNED BY F. POSTLEWAITE
CHECKED BY D. TURNER
DRAWN BY J. SCHULZ
DATE 10/2011

KALAMA FALLS HATCHERY
MODROW TRAP MODIFICATIONS
CIVIL
DETAILS – I

PROJECT NO. CZ:H28:11–1
SHEET 15 OF 63

PLAN

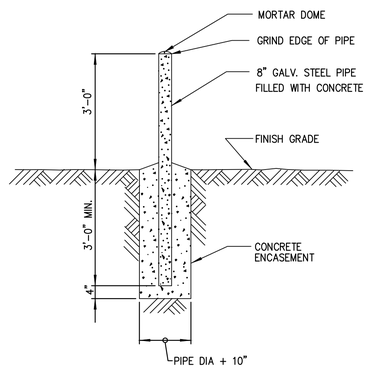

SECTION

DETAIL – GUARD POST (2 / 15 16)
SCALE: 1" = 1'-0"

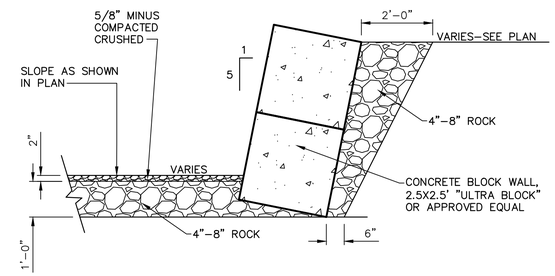

DETAIL – CONCRETE BLOCK WALL (6 / 9 16)
SCALE: 1/2" = 1'-0"

Resource Consultants, Inc.
REDMOND, WA.

WASHINGTON STATE
DEPARTMENT OF FISH AND WILDLIFE

SYM	DATE	REVISION DESCRIPTION	BY

APPROVED AND RELEASED FOR CONSTRUCTION

CHIEF ENGINEER ..... DATE: .....
PROGRAM ..... DATE: .....

0 —— 1"
BAR MEASURES ONE INCH ON ORIGINAL DRAWINGS

DESIGNED BY F. POSTLEWAITE
CHECKED BY D. TURNER
DRAWN BY J. SCHULZ
DATE 10/2011

KALAMA FALLS HATCHERY
MODROW TRAP MODIFICATIONS
CIVIL
DETAILS – II

PROJECT NO. CZ:H28:11–1

SHEET 16 OF 63

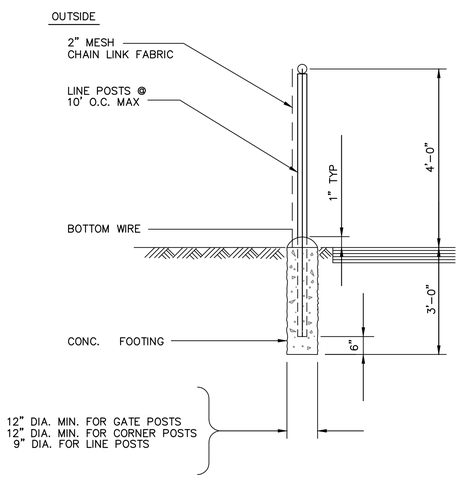

SPECIFICATION

FABRIC	NO. 9 GALV. STEEL WIRE, 2" MESH.
FABRIC TIES	NO. 9 GALV. STEEL WIRE SPACED 14" APART ON POSTS AND 24" APART ON RAILS.
CORNER POST	3" O.D. PIPE, 5.79#/FT.
LINE POSTS	2.25" H – COLUMN SECTION, 4.1#/FT. OR STD. WEIGHT 2 1/2 " O.D. PIPE, 3.65#/FT.
SWING GATE POSTS	4" O.D. PIPE, 9.1#/FT.
TOP RAIL & BRACES	1 5/8 " O.D. PIPE, 2.27#/FT OR 1 1/2" x 1 5/16" H – COLUMN SECTION, 2.00#/FT.
BOTTOM WIRE	COIL SPRING WIRE 7 GA.
ALL FENCING MATERIALS	TO BE HOT–DIPPED GALVANIZED AFTER FABRICATION.

DETAIL – CHAIN LINK FENCE 3/9 17 3/10 17
SCALE: 1/4" = 1'–0"

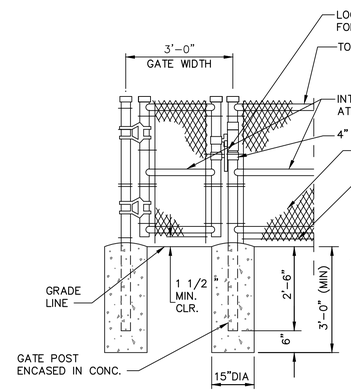

NOTES

1. SEE CHAIN LINK FENCE DETAIL FOR ADDITIONAL REQUIREMENTS.

DETAIL – GATE 1 4/9 17 4/10 17
SCALE: 1/2" = 1'–0"

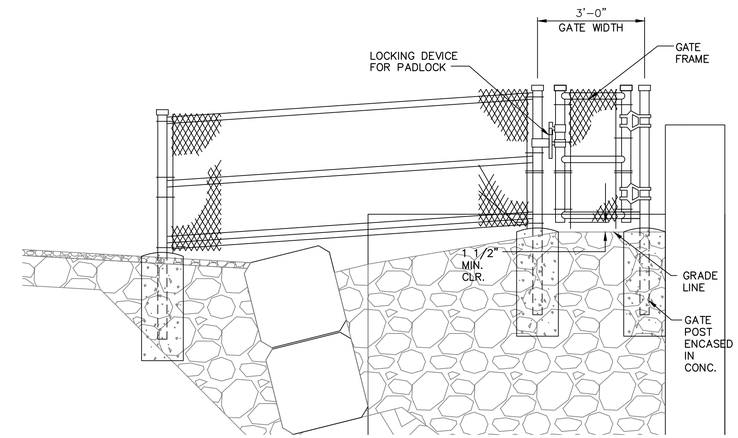

DETAIL – GATE 2 5/9 17 5/10 17
SCALE: 1/2" = 1'–0"

Resource Consultants, Inc.
REDMOND, WA.

WASHINGTON STATE
DEPARTMENT OF FISH AND WILDLIFE

SYM	DATE	REVISION DESCRIPTION	BY

APPROVED AND RELEASED FOR CONSTRUCTION
CHIEF ENGINEER ..... DATE: .....
PROGRAM ..... DATE: .....

0 —— 1"
BAR MEASURES ONE INCH ON ORIGINAL DRAWINGS

DESIGNED BY F. POSTLEWAITE
CHECKED BY D. TURNER
DRAWN BY J. SCHULZ
DATE 10/2011

KALAMA FALLS HATCHERY
MODROW TRAP MODIFICATIONS
CIVIL
DETAILS – III

PROJECT NO. CZ:H28:11–1
SHEET 17 OF 63

GENERAL STRUCTURAL NOTES

G1 CODE REQUIREMENTS: ALL DESIGN AND CONSTRUCTION SHALL CONFORM TO THE REQUIREMENTS OF THE 2009 INTERNATIONAL BUILDING CODE (IBC).

G2 DESIGN LOADS:

DEAD LOADS:
SELF WEIGHT OF STRUCTURE

LIVE LOADS:

OPERATING FLOORS:	
STAIRS	100 PSF
GRATING	100 PSF
OTHER AREAS	100 PSF
WALLS– WATER	3 FT DIFFERENTIAL

WIND LOADS:
100 MPH EXP C

SEISMIC LOADS:
PER IBC 2006 CHAPTER 16 "STRUCTURAL DESIGN" – SEISMIC SITE CLASS D
Ss=1.089
S1=0.567
Fa=1.11
Fv=1.76

G3 DIMENSIONS: VERIFY ALL DIMENSIONS AND ALL CONDITIONS AT JOB SITE INCLUDING BUILDING AND SITE CONDITIONS BEFORE COMMENCING WORK. COMMENCEMENT OF WORK INDICATES ACCEPTANCE OF FIELD CONDITIONS. STRUCTURAL DIMENSIONS CONTROLLED BY OR RELATED TO MECHANICAL OR ELECTRICAL EQUIPMENT SHALL BE VERIFIED PRIOR TO CONSTRUCTION. DO NOT SCALE DRAWINGS. USE ONLY WRITTEN DIMENSIONS.

G4 PROVISIONS FOR EQUIPMENT: VERIFY AND COORDINATE ALL REQUIRED OPENINGS IN FLOORS, WALLS, AND ROOF WITH ALL DISCIPLINES. MECHANICAL AND ELECTRICAL EQUIPMENT SUPPORTS, ANCHORAGES, OPENINGS AND RECESSES NOT SHOWN ON THE STRUCTURAL DRAWINGS BUT REQUIRED BY OTHER CONTRACT DRAWINGS SHALL BE PROVIDED.

G5 TYPICAL DETAILS: THE DETAILS SHOWN ARE TYPICAL AND SHALL BE USED FOR LIKE OR SIMILAR CONDITIONS NOT SHOWN.

G6 ALTERNATIVE DESIGNS: THE STRUCTURAL SYSTEMS AND DETAILS ON THESE PLANS ARE THE PRIORITY DESIGN. VARIATIONS AND MODIFICATIONS TO WORK SHOWN ON THESE DRAWINGS SHALL NOT BE CARRIED OUT WITHOUT WRITTEN PERMISSION FROM THE STRUCTURAL ENGINEER.

G7 BACKFILL: NO EARTH SHALL BE BACKFILLED AGAINST THE CONCRETE STRUCTURE FOR A MINIMUM OF 7 DAYS OR UNTIL THE COMPLETED CONCRETE STRUCTURE HAS REACHED ITS DESIGN STRENGTH.

CONCRETE

C1 CODE: CONCRETE WORK AND REINFORCEMENT SHALL CONFORM TO ALL REQUIREMENTS OF ACI 318. CONCRETE STRENGTHS SHALL BE VERIFIED BY STANDARD 28–DAY CYLINDER TESTS UNLESS OTHERWISE APPROVED.

C2 CONCRETE STRENGTH:

USE	STRENGTH fc'
WALLS, BEAMS, STRUCTURAL SLABS, COLUMNS, PIPE SUPPORTS	4000 PSI
TREMIE CONCRETE	6000 PSI
ALL OTHER CONCRETE	4000 PSI

C3 MINIMUM REINFORCEMENT:
WALL REINFORCING: (UNLESS NOTED OTHERWISE)

THICKNESS	HORIZONTAL	VERTICAL
8" WALL & UNDER	#5 @ 12"@ ℄	#5 @ 12" AT ℄L
10" WALL	#4 @ 12" EF	#4 @ 12" EF
12" WALL	#5 @ 12" EF	#5 @ 12" EF

C4 REINFORCING STEEL: ALL REINFORCING STEEL SHALL BE IN ACCORDANCE WITH ASTM A–615, GRADE 60, FOR DEFORMED BARS AND ASTM A–185 (FY – 65,000 PSI) FOR SMOOTH WELDED WIRE FABRIC (WWF), UNLESS OTHERWISE NOTED.

C5 REINFORCING STEEL DETAILS:
REINFORCING STEEL SHALL HAVE PROTECTION AS FOLLOWS (UNLESS OTHERWISE NOTED):

USE	COVER
BEAMS AND COLUMN BARS	1 1/2" (TO STIRRUPS)
SLAB BARS	1 1/2"
WALL BARS: INTERIOR FACES	1 1/2
EXPOSED TO WEATHER OR EARTH	1 1/2" (#5 OR SMALLER) 2" (#6 OR LARGER)
FOOTING AND SLAB BARS CAST ON GROUND	3"

C6 BAR LAP SPLICES: DOWELS SHALL BE SAME SIZE AND SPACING AS BARS WITH WHICH THEY ARE LAPPED. THE LAP EMBEDMENT SHALL BE EQUAL TO THE TENSION EMBEDMENT. VERTICAL REINFORCING BAR SPLICES IN COLUMNS SHALL HAVE AT LEAST 30 BAR DIAMETER LAP, UNO OR SHOWN ON DWG. ALL OTHER BAR SPLICES SHALL BE LAPPED AS SHOWN ON SHEET 041:

C7 RESTRICTED BAR ANCHORAGE: IN CASES WHERE REINFORCING BARS CANNOT BE EXTENDED AS FAR AS REQUIRED DUE TO THE UNITED EXTENT OF THE ADJACENT CONCRETE STRUCTURE, THE BARS SHALL EXTEND AS FAR AS POSSIBLE AND END IN STANDARD HOOKS.

C8 CHAMFERS: EXCEPT AS OTHERWISE REQUIRED, EXPOSED CONCRETE CORNERS AND EDGES SHALL HAVE 3/4" CHAMFERS. RE–ENTRANT CORNERS SHALL NOT HAVE FILLETS UNLESS OTHERWISE SHOWN.

C9 ANCHOR BOLTS: ALL BOLTS SHALL BE STAINLESS STEEL UNLESS OTHERWISE NOTED. ADDITIONAL EMBEDMENT LENGTH REQUIRED FOR EQUIPMENT ANCHOR BOLTS SHALL BE DETERMINED BY THE EQUIPMENT SUPPLIER.

FOUNDATIONS

F1 FOOTING EXCAVATIONS SHALL BE INSPECTED AND APPROVED BY THE ENGINEER PRIOR TO PLACEMENT OF FOOTING CONCRETE.

F2 STRUCTURAL BACKFILL BELOW CONCRETE STRUCTURES MAY BE SUITABLE ON–SITE MATERIAL AS APPROVED BY THE ENGINEER.

STEEL

S1 STEEL SPECIFICATIONS:
DESIGN, FABRICATION AND ERECTION SHALL BE IN ACCORDANCE WITH THE FOLLOWING SPECIFICATIONS:

STRUCTURAL STEEL:
AISC–SPECIFICATIONS FOR THE DESIGN, FABRICATION AND ERECTION OF STRUCTURAL STEEL FOR BUILDINGS – 13TH EDITION

WELDING:
AWS D1.1 – FOR AWS PREQUALIFIED JOINT DETAILS USE 3/16" MIN WELDS (UNLESS OTHERWISE NOTED)

WELDER CERTIFICATION:
CERTIFY WELDING PERSONNEL IN ACCORDANCE WITH AWS

S2 FABRICATION AND ERECTION:
THE CONTRACTOR SHALL BE RESPONSIBLE FOR ALL ERECTION AIDS AND JOINT PREPARATION THAT INCLUDE BUT ARE NOT LIMITED TO: ERECTION ANGLES; LIFT HOLES; WELDING PROCEDURES; GROOVE ANGLES; BACKING BARS, COPES; SURFACE ROUGHNESS VALUES; AND TAPERS OF UNEQUAL PARTS.

S3 STEEL MATERIALS:

STRUCTURAL WIDE FLANGE	–ASTM A 992
CONNECTION MATERIAL, EMBEDDED ITEMS, CHANNELS, ANGLES, BASE PLATES, AND MISC. STEEL	–ASTM A36
STEEL TUBE	–ASTM A500 GRADE B
STRUCTURAL BOLTS	–ASTM A325 N
ANCHOR BOLTS	–ASTM A304 SS
THREADED RODS	–ASTM A36
WELDING ELECTRODES	–E70XX

S4 GROUT: GROUT SHALL BE AN APPROVED NONSHRINK CEMENTITIOUS GROUT CONTAINING NATURAL AGGREGATES DELIVERED TO THE JOBSITE IN FACTORY PREPACKAGED CONTAINERS REQUIRING ONLY THE ADDITION OF WATER. MINIMUM 28–DAY COMPRESSIVE STRENGTH SHALL BE 5000 PSI.

S5 ENCASED STEEL: STEEL COMPLETELY ENCASED IN CONCRETE SHALL NOT BE GALVANIZED OR PAINTED AND SHALL HAVE A CLEAN SURFACE FOR BONDING TO CONCRETE.

S6 PAINTING: UNLESS OTHERWISE NOTED, CARBON STEEL, INCLUDING GRATING, STRUCTURAL STEEL, BOLTS, ETC., SHALL BE PAINTED IN ACCORDANCE WITH SPECIFICATION SECTION 9.

S7 ANCHORAGE TO EXISTING CONCRETE: EPOXY ADHESIVE ANCHORS UNLESS NOTED OTHERWISE.

STAINLESS STEEL SHAPES AND PLATES

A. ROLLED FLOOR PLATE: ASTM A793, FLAT BACK, TYPE 304.

B. PLATE: ASTM A480 & A666, TYPE 304, ANNEALED, No. 1 FINISH.

C. BARS AND SHAPES: ASTM A276, TYPE 304, CONDITION A.

D. PIPE: ASTM A312, TYPE 304, SEAMLESS OR WELDED.

E. BOLTS: ASTM F593, ALLOY GROUP 1 (TO BOLT TYPE 304 SHAPES) AND ALLOY GROUP 2 (TO BOLT TYPE 316 SHAPES), HEX HEAD.

F. NUTS: ASTM F594, ALLOY GROUP 1 (TO BOLT TYPE 304 SHAPES) AND ALLOY GROUP 2 (TO BOLT TYPE 316 SHAPES), HEX HEAD.

G. WELDING:

i. WELDING SHALL CONFORM TO AWS SPECIFICATION D1.6.

ii. WELDERS SHALL BE QUALIFIED UNDER AWS SPECIFICATIONS.

iii. ALL WELDS SHALL BE SPECIALLY INSPECTED IN ACCORDANCE WITH IBC CHAPTER 17.

iv. THE FOLLOWING THREE WELD METHODS ARE APPROVED FOR USE: SMAW GMAW AND FCAW.

v. SMAW WELDS SHALL BE MADE WITH THE FOLLOWING ELECTRODES:

1. E308 (FOR TYPE 304)
2. E308L (FOR TYPE 304L)
3. E316 (FOR TYPE 316)
4. E316L (FOR TYPE 316L)

ELECTRODES FOR SMAW SHALL BE STORED IN ACCORDANCE WITH AWS D1.6, SECTION 3.10.2.

vi. GMAW WELDS SHALL BE MADE WITH THE FOLLOWING ELECTRODES:

1. ER308 (FOR TYPE 304)
2. ER308L (FOR TYPE 304L)
3. ER316 (FOR TYPE 316)
4. ER316L (FOR TYPE 316L)

vii. FCAW WELDS SHALL BE MADE WITH THE FOLLOWING ELECTRODES:

1. ER308TX–X (FOR TYPE 304)
2. ER308LTX–X (FOR TYPE 304L)
3. ER316TX–X (FOR TYPE 316)
4. ER316LTX–X (FOR TYPE 316L)

viii. FOR WELDING STAINLESS STEEL TO CARBON STEEL, USE E309L, ER309L OR E309LTX–X ELECTRODE, DEPENDING UPON WELD PROCESS.

ALUMINUM

AL1 SHAPES, SHEETS AND PLATE TYPE–6016–T6

AL2 WELDING MATERIALS AND PROCEDURES FOR ALUMINUM SHALL BE IN ACCORDANCE WITH AWS D1.2

INSPECTIONS

SPECIAL INSPECTIONS WILL BE PERFORMED BY OWNER OR OWNERS REPRESENTATIVE FOR THE FOLLOWING WORK:

1. STRUCTURAL CONCRETE TEST CYLINDERS.
2. BOLTS AND EMBEDS INSTALLED IN CONCRETE.
3. INSTALLATION OF DRILLED AND GROUTED DOWELS AND ANCHORS.
4. REINFORCING STEEL.
5. STRUCTURAL STEEL FABRICATION AND ERECTION.
6. FIELD WELDING
7. EXCAVATION AND SOIL COMPACTION.

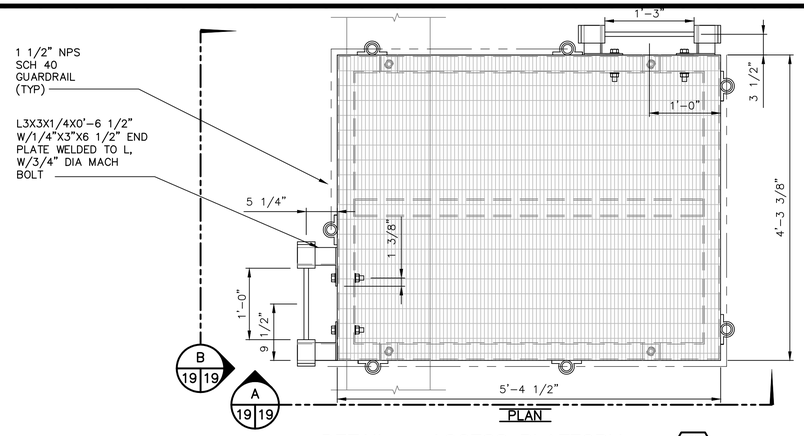

PLAN

DETAIL – ACCESS PLATFORM

SCALE: 1" = 1'-0"

1 / 21 19

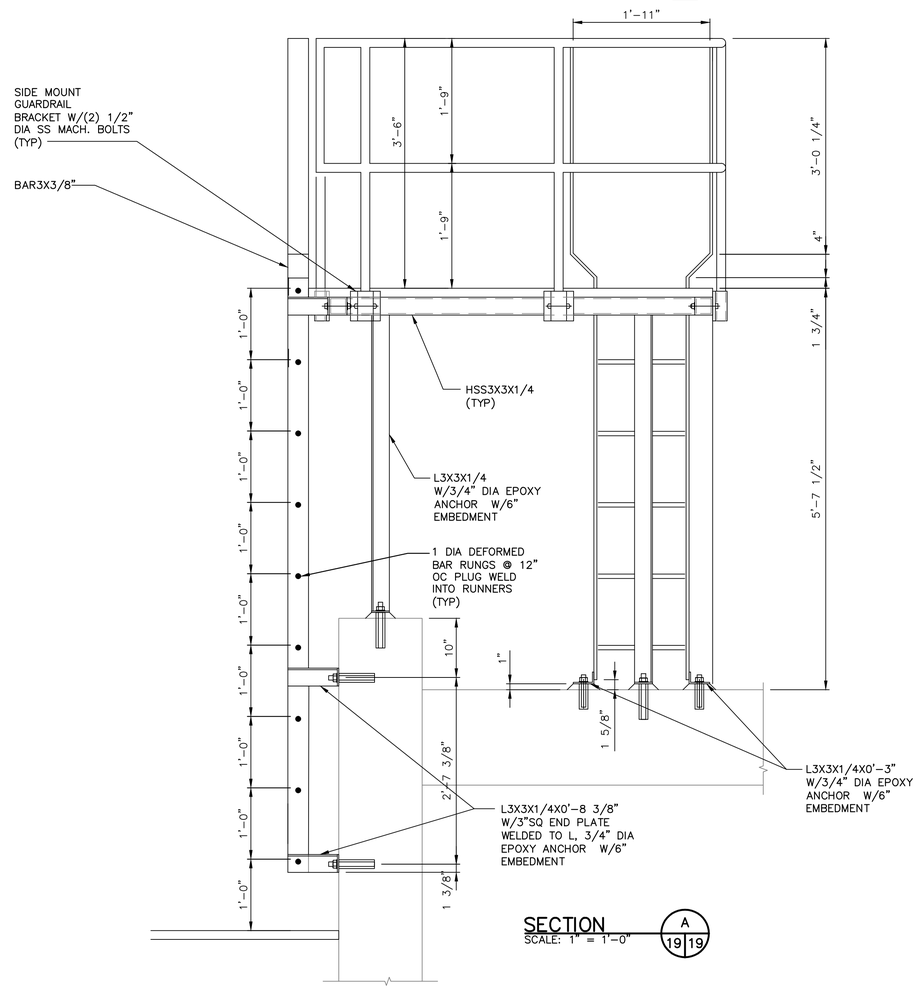

SECTION

SCALE: 1" = 1'-0"

A / 19 19

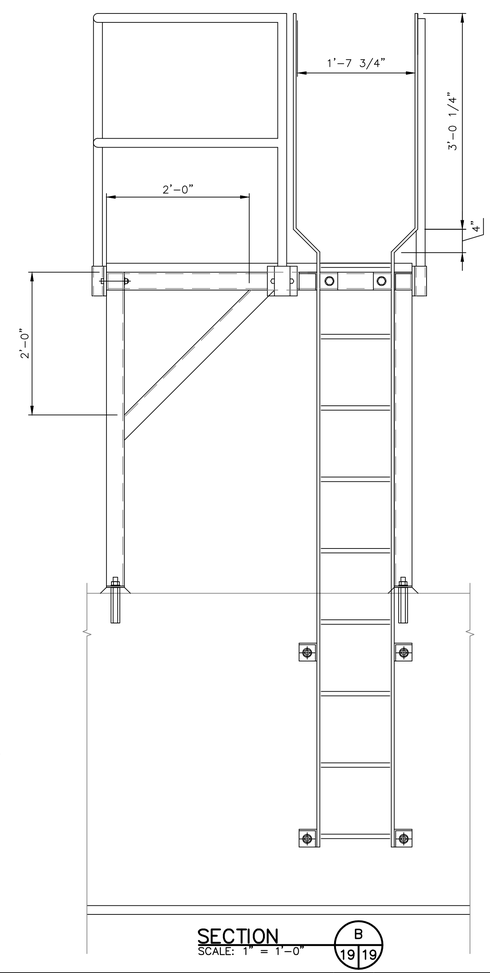

SECTION

SCALE: 1" = 1'-0"

B / 19 19

Resource Consultants, Inc.
REDMOND, WA.

WASHINGTON STATE
DEPARTMENT OF FISH AND WILDLIFE

SYM	DATE	REVISION DESCRIPTION	BY

APPROVED AND RELEASED FOR CONSTRUCTION

CHIEF ENGINEER ..... DATE: .....
PROGRAM ..... DATE: .....

0 — 1"
BAR MEASURES
ONE INCH ON
ORIGINAL DRAWINGS

DESIGNED BY F. POSTLEWAITE
CHECKED BY D. TURNER
DRAWN BY J. SCHULZ
DATE 10/2011

KALAMA FALLS HATCHERY

MODROW TRAP MODIFICATIONS
STRUCTURAL
STANDARD DETAILS – I

PROJECT NO. CZ:H28:11-1

SHEET 19 OF 63

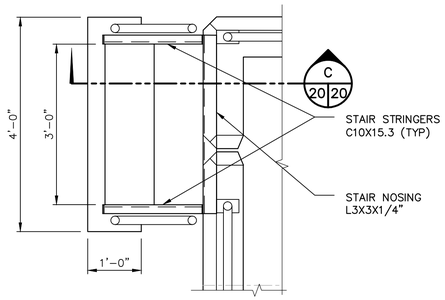

PLAN

DETAIL – STAIRS (2/21 20) (2/30 20)
SCALE: 3/4" = 1'-0"

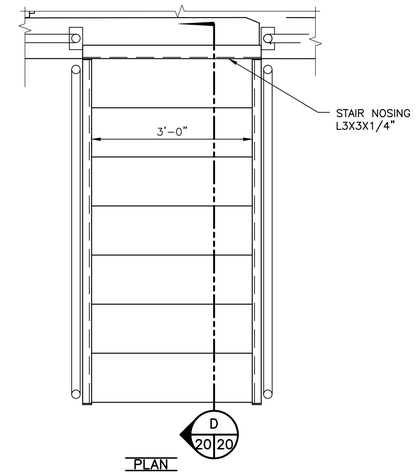

PLAN

DETAIL – STAIRS (3/21 20) (3/30 20)
SCALE: 3/4" = 1'-0"

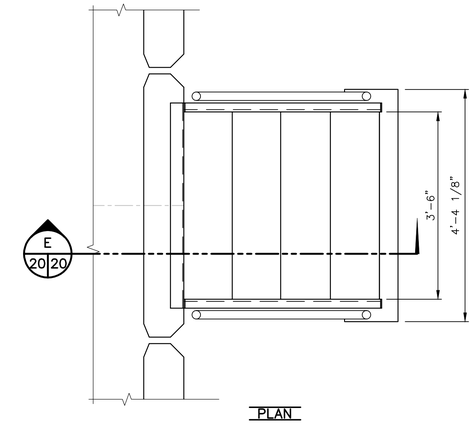

PLAN

DETAIL – STAIRS (4/21 20) (4/30 20)
SCALE: 3/4" = 1'-0"

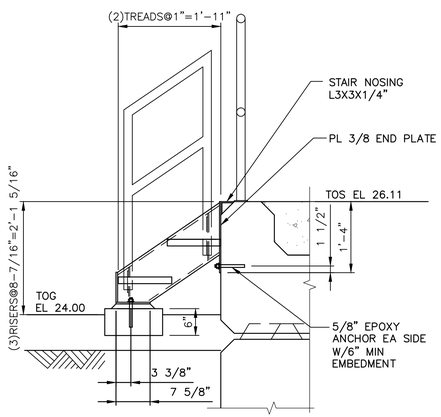

SECTION (C 20 20)
SCALE: 1" = 1'-0"

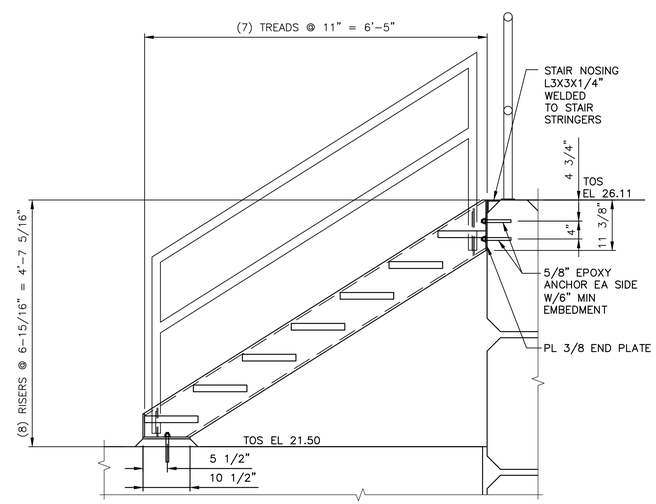

SECTION (D 20 20)
SCALE: 1" = 1'-0"

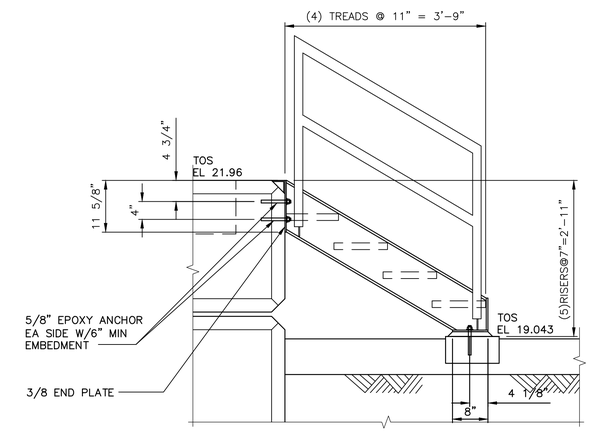

SECTION (E 20 20) (5/30 20)
SCALE: 1" = 1'-0"

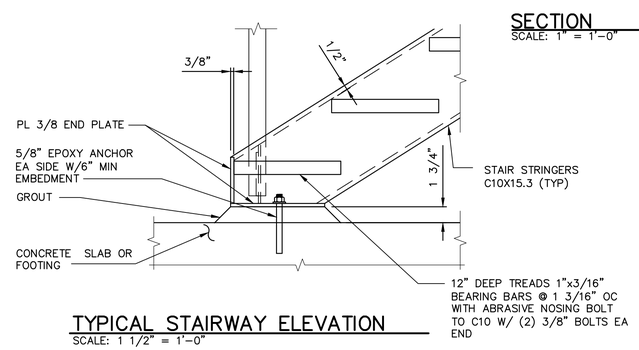

TYPICAL STAIRWAY ELEVATION
SCALE: 1 1/2" = 1'-0"

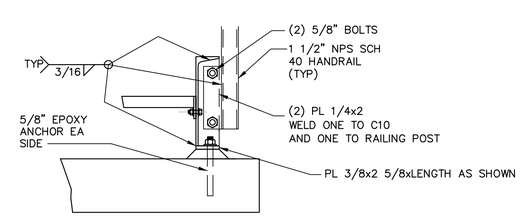

TYPICAL STAIRWAY HANDRAIL CONN
SCALE: 1 1/2" = 1'-0"

Resource Consultants, Inc.
REDMOND, WA.

WASHINGTON STATE
DEPARTMENT OF FISH AND WILDLIFE

SYM	DATE	REVISION DESCRIPTION	BY

APPROVED AND RELEASED FOR CONSTRUCTION
CHIEF ENGINEER ..... DATE: .....
PROGRAM ..... DATE: .....

0 —— 1"
BAR MEASURES ONE INCH ON ORIGINAL DRAWINGS

DESIGNED BY F. POSTLEWAITE
CHECKED BY D. TURNER
DRAWN BY J. SCHULZ
DATE 10/2011

KALAMA FALLS HATCHERY
MODROW TRAP MODIFICATIONS
STRUCTURAL
STANDARD DETAILS – II

PROJECT NO. CZ:H28:11-1
SHEET 20 OF 63

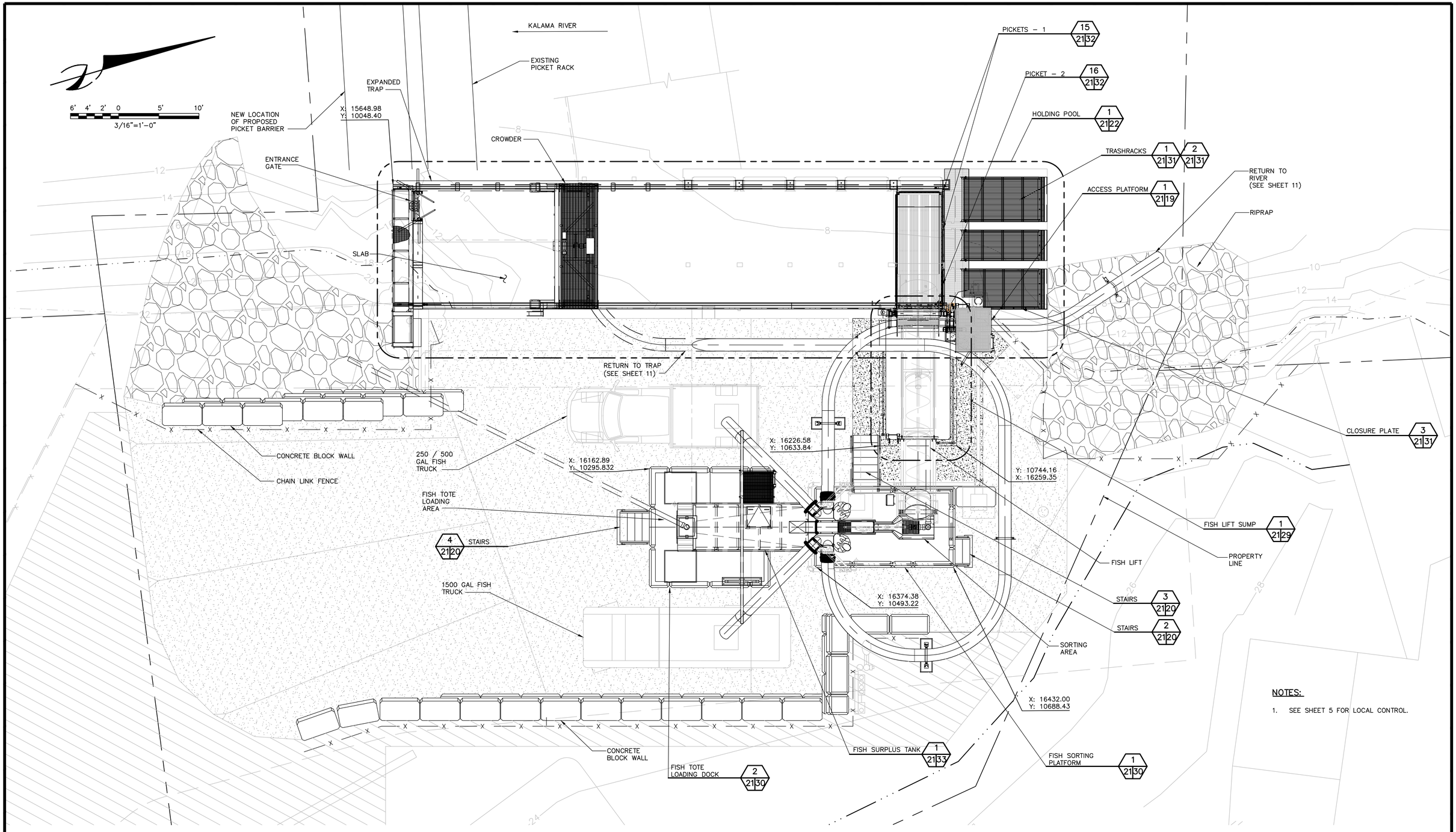

NOTES:

1. SEE SHEET 5 FOR LOCAL CONTROL.

STRUCTURAL GENERAL ARRANGEMENT PLAN
SCALE: 3/16" = 1'-0"

Resource Consultants, Inc.
REDMOND, WA.

WASHINGTON STATE
DEPARTMENT OF FISH AND WILDLIFE

SYM	DATE	REVISION DESCRIPTION	BY
		APPROVED AND RELEASED FOR CONSTRUCTION	

CHIEF ENGINEER ..... DATE: .....
PROGRAM ..... DATE: .....

0 — 1"
BAR MEASURES ONE INCH ON ORIGINAL DRAWINGS

DESIGNED BY F. POSTLEWAITE
CHECKED BY D. TURNER
DRAWN BY J. SCHULZ
DATE 10/2011

KALAMA FALLS HATCHERY

MODROW TRAP MODIFICATIONS
STRUCTURAL
GENERAL ARRANGEMENT PLAN

PROJECT NO. CZ:H28:11-1

SHEET 21 OF 63

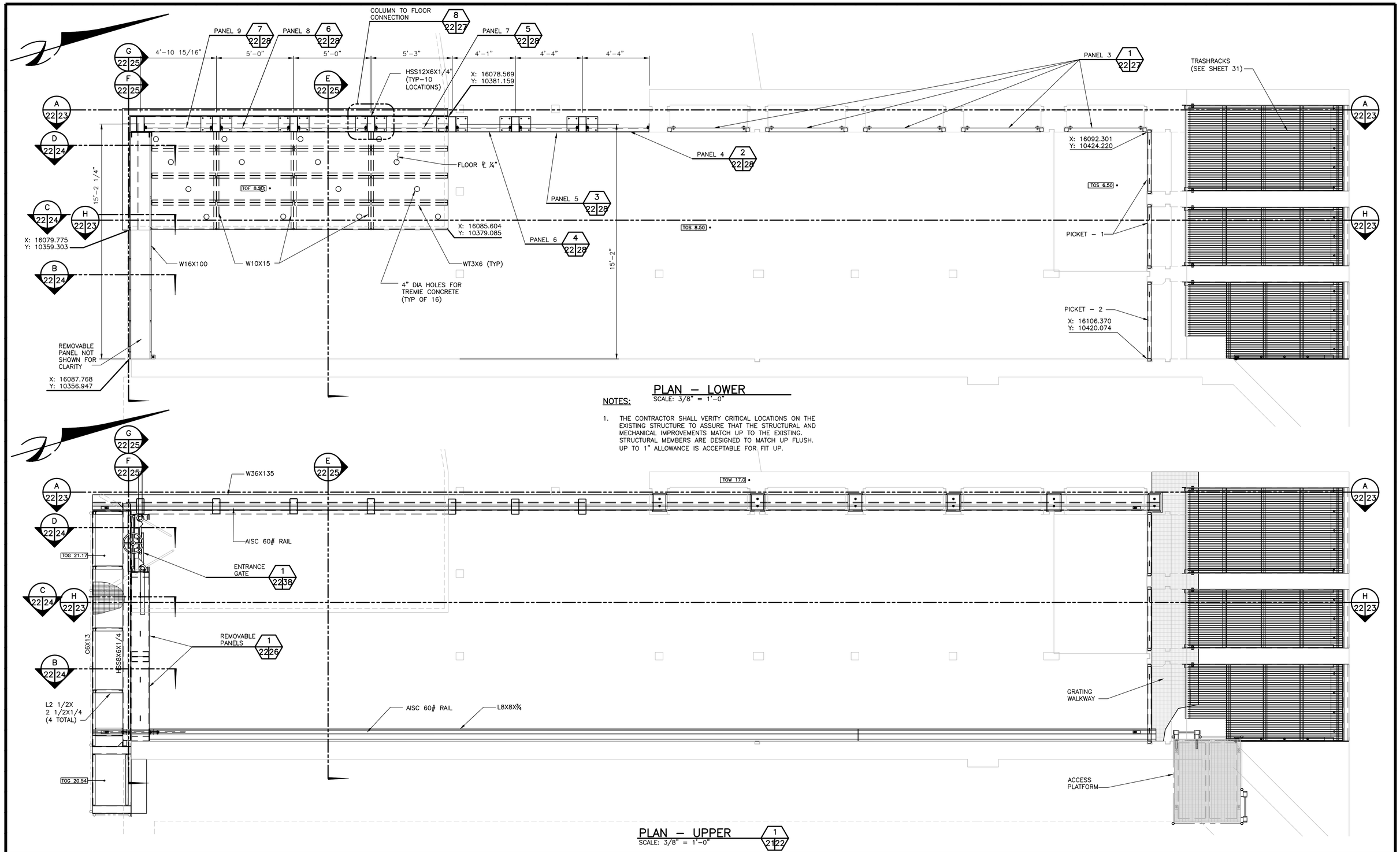

PLAN – LOWER

SCALE: 3/8" = 1'-0"

NOTES:

1. THE CONTRACTOR SHALL VERITY CRITICAL LOCATIONS ON THE EXISTING STRUCTURE TO ASSURE THAT THE STRUCTURAL AND MECHANICAL IMPROVEMENTS MATCH UP TO THE EXISTING. STRUCTURAL MEMBERS ARE DESIGNED TO MATCH UP FLUSH. UP TO 1" ALLOWANCE IS ACCEPTABLE FOR FIT UP.

PLAN – UPPER

SCALE: 3/8" = 1'-0"

Resource Consultants, Inc.
REDMOND, WA.

WASHINGTON STATE
DEPARTMENT OF FISH AND WILDLIFE

SYM	DATE	REVISION DESCRIPTION	BY

APPROVED AND RELEASED FOR CONSTRUCTION

CHIEF ENGINEER ..... DATE: .....
PROGRAM ..... DATE: .....

0 — 1"
BAR MEASURES ONE INCH ON ORIGINAL DRAWINGS

DESIGNED BY F. POSTLEWAITE
CHECKED BY D. TURNER
DRAWN BY J. SCHULZ
DATE 10/1911

KALAMA FALLS HATCHERY

MODROW TRAP MODIFICATIONS
STRUCTURAL
HOLDING POOL–PLANS

PROJECT NO. CZ:H28:11–1

SHEET 22 OF 63

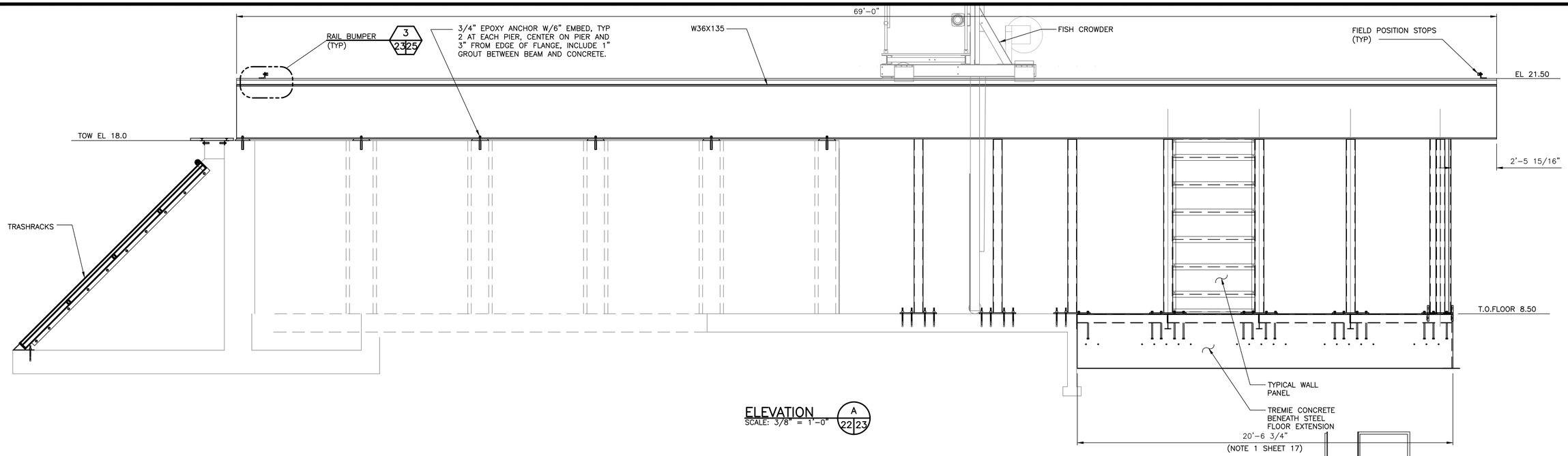

ELEVATION
SCALE: 3/8" = 1'-0"
A
22 23

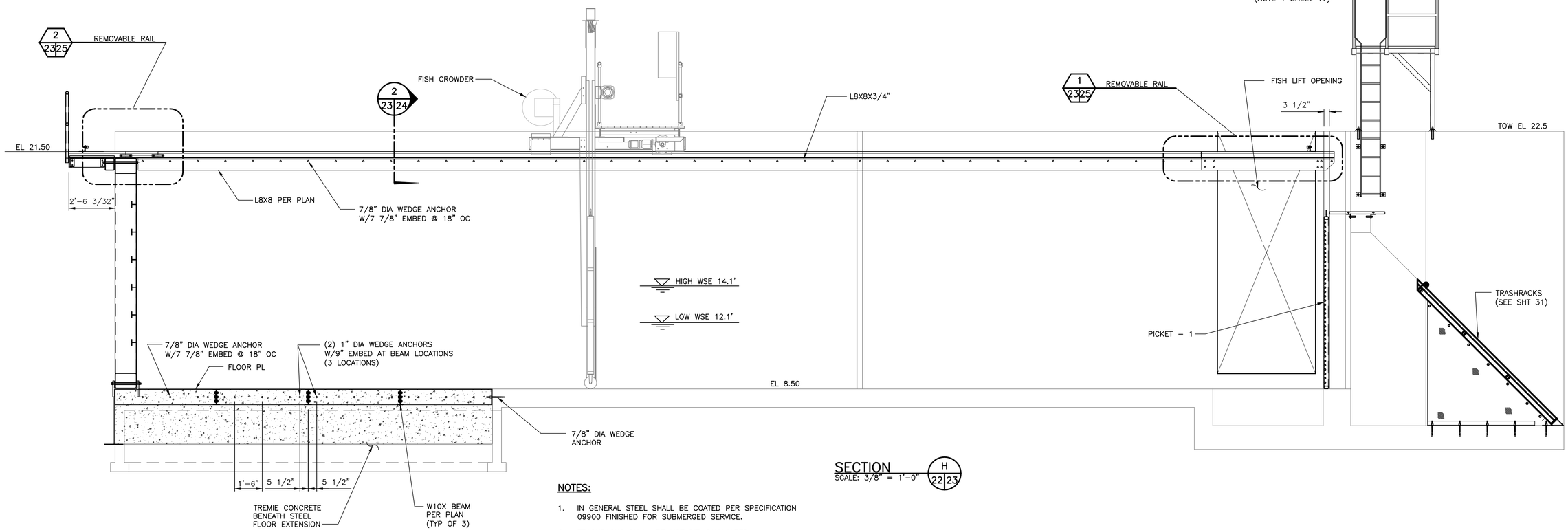

SECTION
SCALE: 3/8" = 1'-0"
H
22 23

NOTES:

1. IN GENERAL STEEL SHALL BE COATED PER SPECIFICATION 09900 FINISHED FOR SUBMERGED SERVICE.
2. TRASHRACKS SHALL BE HOT DIP GALVANIZED.
3. TROLLEY RAILS SHALL BE UNCOATED.

Resource Consultants, Inc.
REDMOND, WA.

WASHINGTON STATE
DEPARTMENT OF FISH AND WILDLIFE

SYM	DATE	REVISION DESCRIPTION	BY

APPROVED AND RELEASED FOR CONSTRUCTION
CHIEF ENGINEER ..... DATE: .....
PROGRAM ..... DATE: .....

0 — 1"
BAR MEASURES ONE INCH ON ORIGINAL DRAWINGS

DESIGNED BY F. POSTLEWAITE
CHECKED BY D. TURNER
DRAWN BY J. SCHULZ
DATE 10/2011

KALAMA FALLS HATCHERY
MODROW TRAP MODIFICATIONS
STRUCTURAL
HOLDING POOL–SECTIONS

PROJECT NO. CZ:H28:11–1
SHEET 23 OF 63

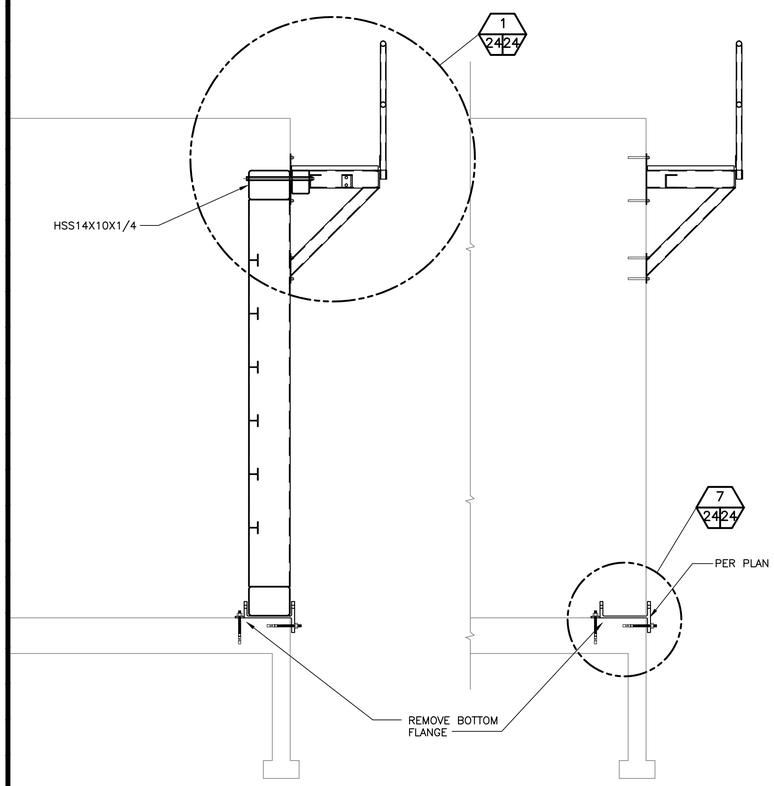

WITH REMOVABLE PANEL

WITHOUT REMOVABLE PANEL

SECTION B
SCALE: 1/2" = 1'-0"
22 24

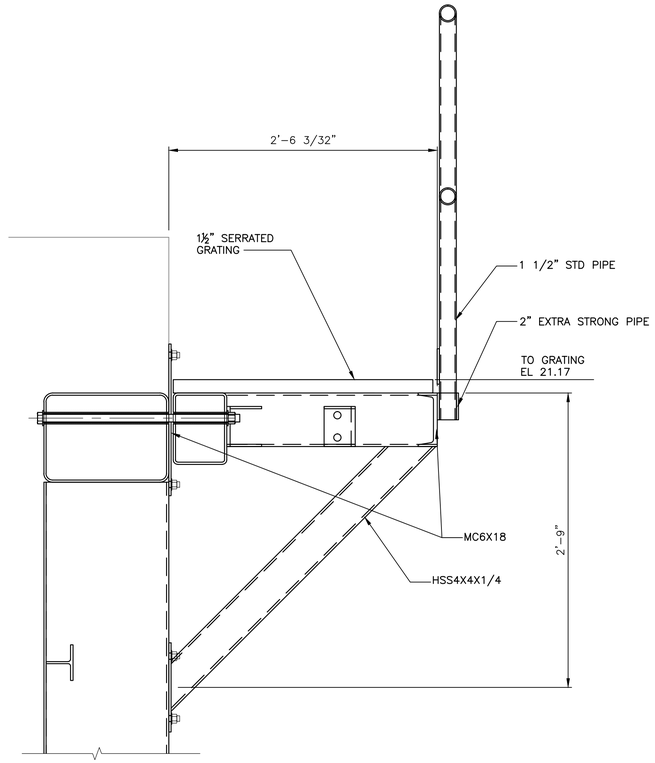

DETAIL 1
SCALE: 1-1/2" = 1'-0"
24 24

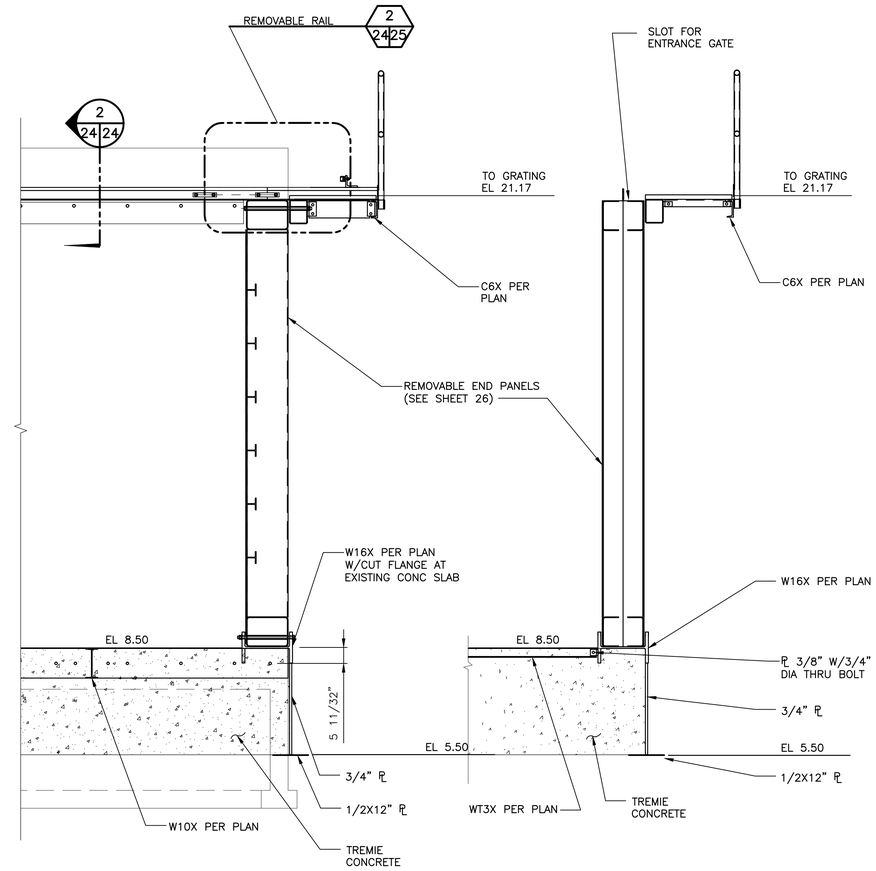

SECTION C
SCALE:1/2" = 1'-0"
23 24

SECTION D
SCALE:1/2" = 1'-0"
23 24

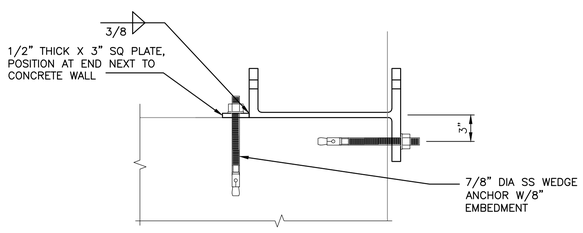

DETAIL 7
SCALE: 1-1/2" = 1'-0"
24 24

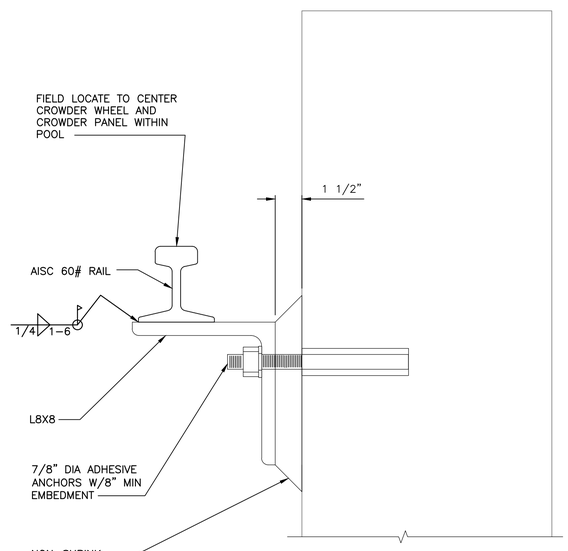

SECTION 2 2
SCALE: 3" = 1'-0"
23 24 24 24

Resource Consultants, Inc.
REDMOND, WA.

WASHINGTON STATE
DEPARTMENT OF FISH AND WILDLIFE

SYM	DATE	REVISION DESCRIPTION	BY

APPROVED AND RELEASED FOR CONSTRUCTION

CHIEF ENGINEER ..... DATE: .....
PROGRAM ..... DATE: .....

0 ——— 1"
BAR MEASURES ONE INCH ON ORIGINAL DRAWINGS

DESIGNED BY F. POSTLEWAITE
CHECKED BY D. TURNER
DRAWN BY J. SCHULZ
DATE 10/2011

KALAMA FALLS HATCHERY

MODROW TRAP MODIFICATIONS
STRUCTURAL
HOLDING POOL WALLS–SECTIONS I

PROJECT NO. CZ:H28:11-1

SHEET 24 OF 63

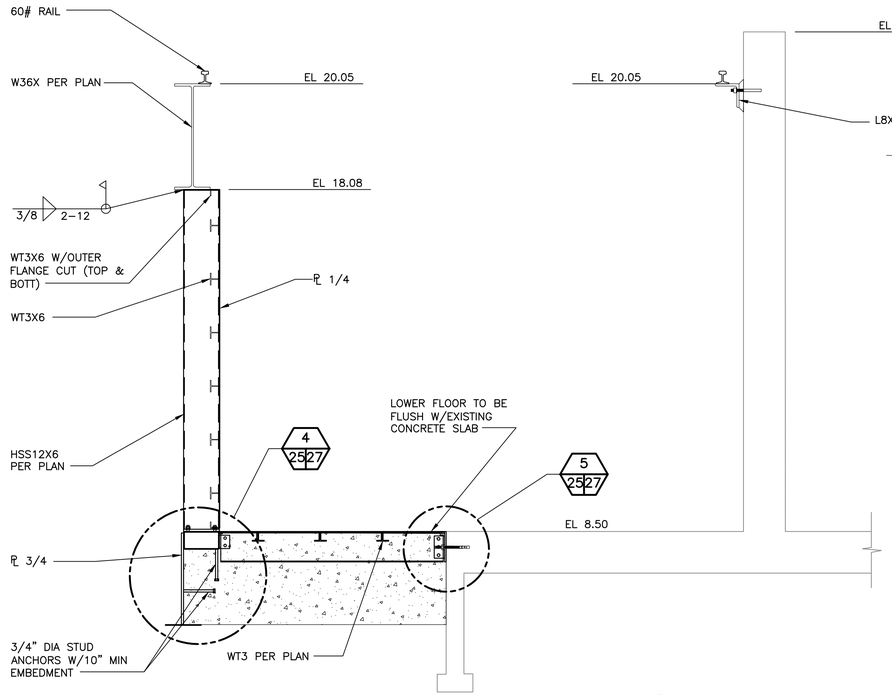

SECTION E
SCALE: 1/2 = 1'-0"
22 25

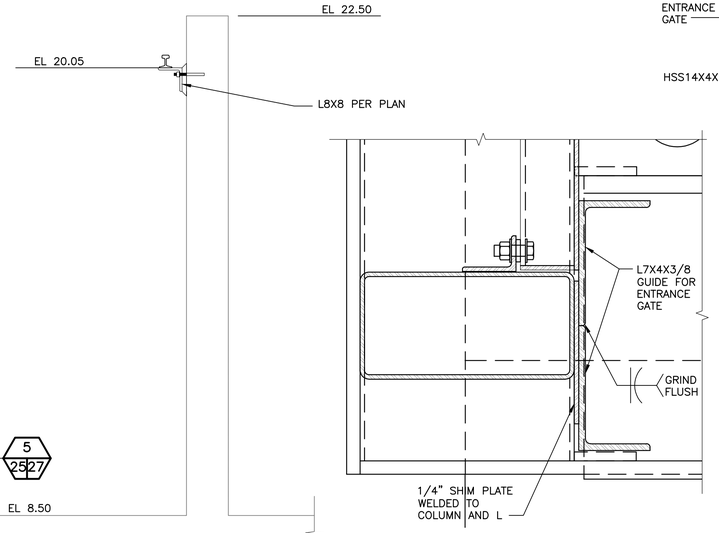

SECTION D
SCALE: 3" = 1'-0"
25 25

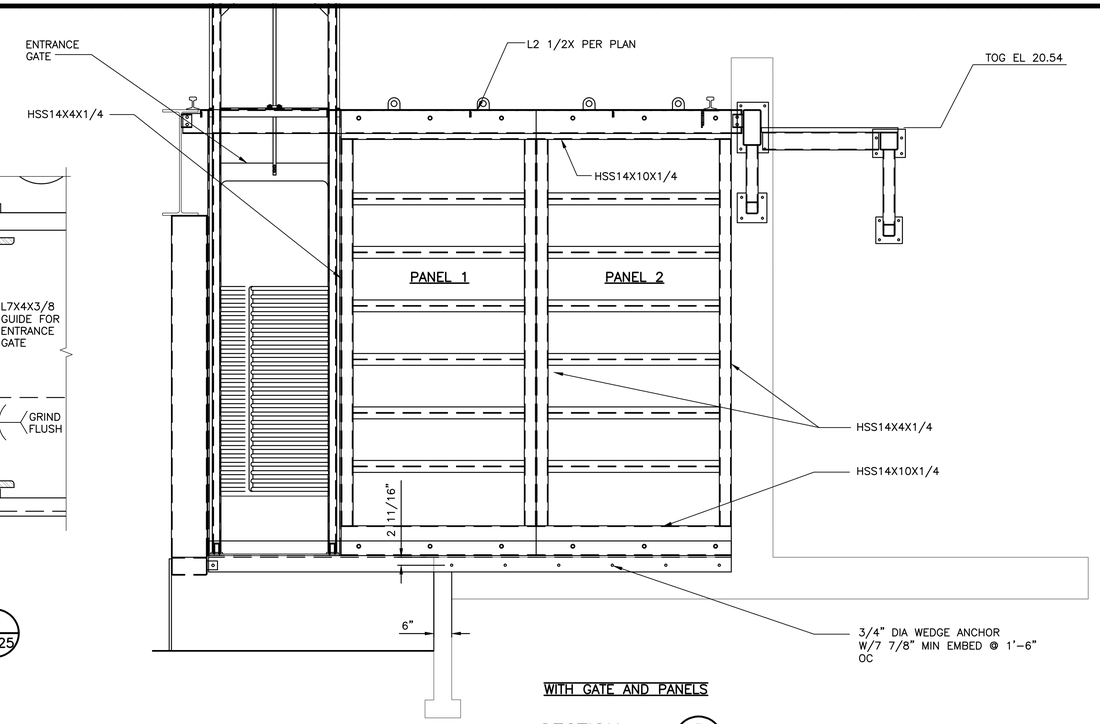

WITH GATE AND PANELS

SECTION F
SCALE: 1/2" = 1'-0"
22 25

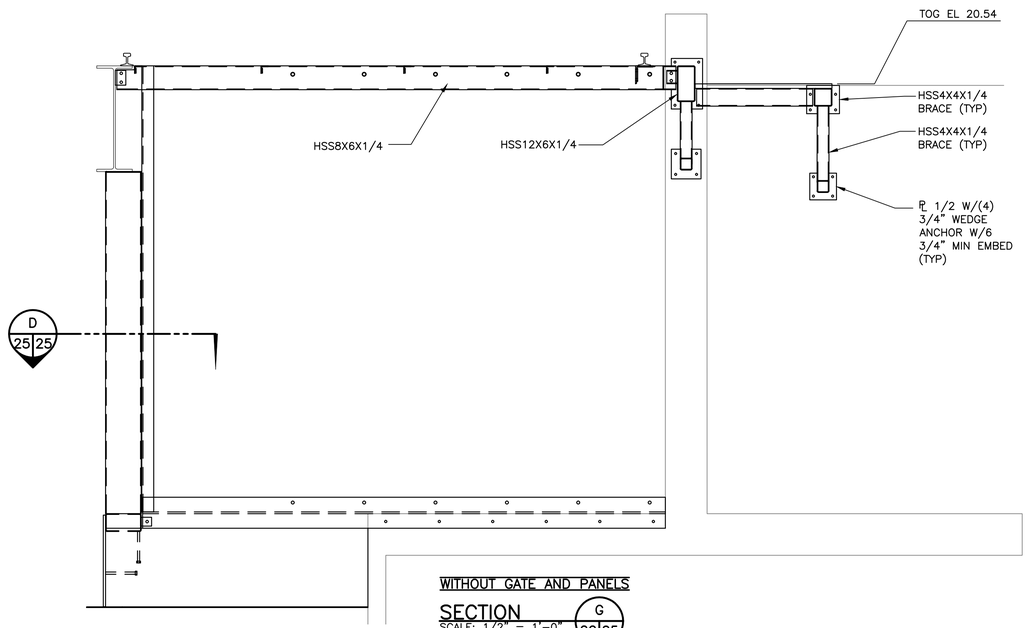

WITHOUT GATE AND PANELS

SECTION G
SCALE: 1/2" = 1'-0"
22 25

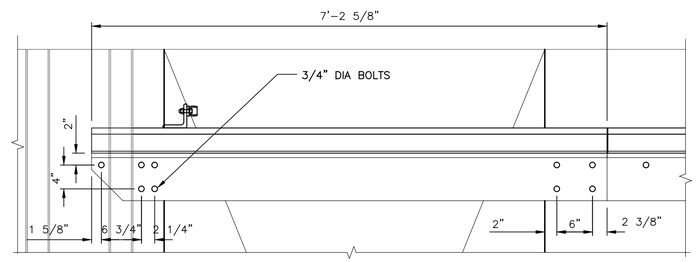

DETAIL – REMOVABLE RAIL
SCALE: 1" = 1'-0"
1 23 25

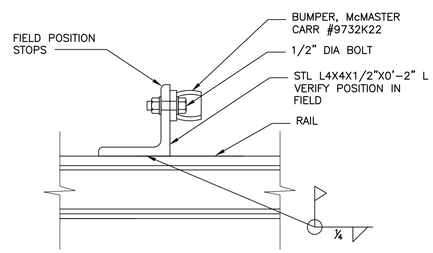

DETAIL – RAIL BUMPER
SCALE: 3" = 1'-0"
3 23 25

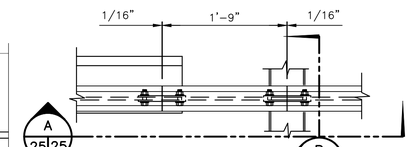

PLAN

DETAIL – REMOVABLE RAIL
SCALE: 1" = 1'-0"
2 23 25
2 24 25

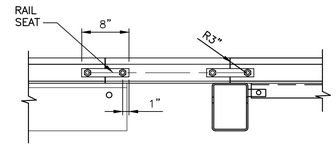

SECTION A
25 25

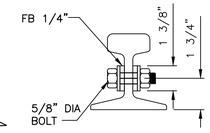

SECTION B
25 25

Resource Consultants, Inc.
REDMOND, WA.

WASHINGTON STATE
DEPARTMENT OF FISH AND WILDLIFE

SYM	DATE	REVISION DESCRIPTION	BY

APPROVED AND RELEASED FOR CONSTRUCTION
CHIEF ENGINEER ..... DATE: .....
PROGRAM ..... DATE: .....

0 — 1"
BAR MEASURES ONE INCH ON ORIGINAL DRAWINGS

DESIGNED BY F. POSTLEWAITE
CHECKED BY D. TURNER
DRAWN BY J. SCHULZ
DATE 10/2011

KALAMA FALLS HATCHERY
MODROW TRAP MODIFICATIONS
STRUCTURAL
HOLDING POOL WALLS–SECTIONS II

PROJECT NO. CZ:H28:11–1

SHEET 25 OF 63

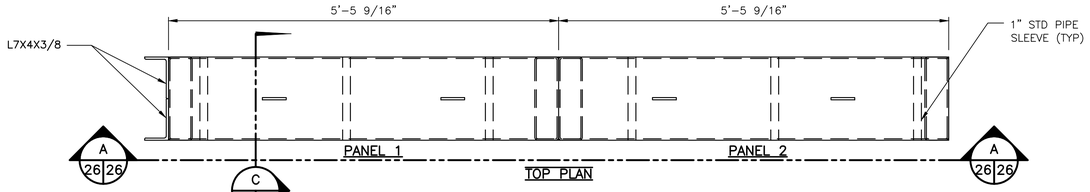

DETAIL – REMOVABLE PANELS 1 22 26
SCALE: 1" = 1'-0"

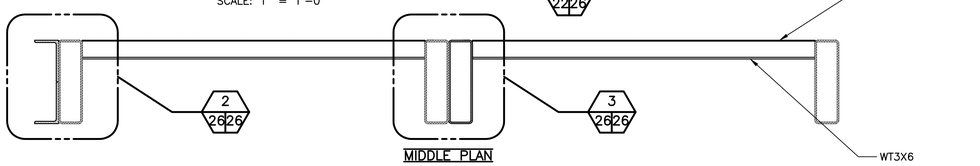

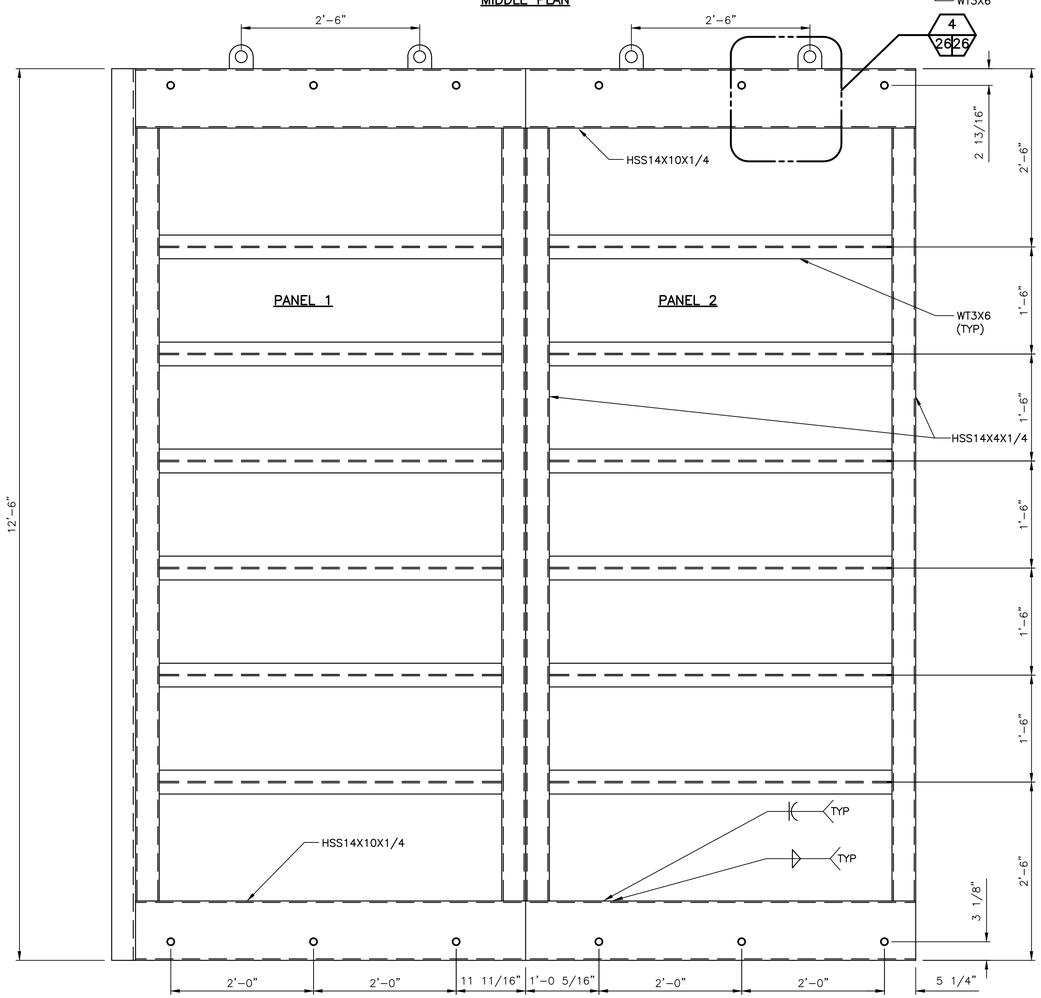

SECTION A 26 26
SCALE: 1 = 1'-0"

NOTES:

1. COAT PER SPECIFICATION 09900 FINISHED FOR NON-GALVANIZED SUBMERGED SERVICE.

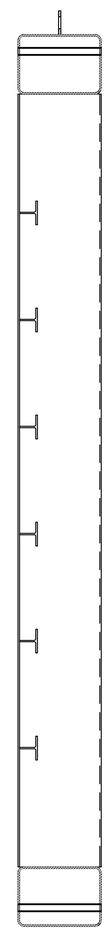

SECTION C 26 26
SCALE: 1 = 1'-0"

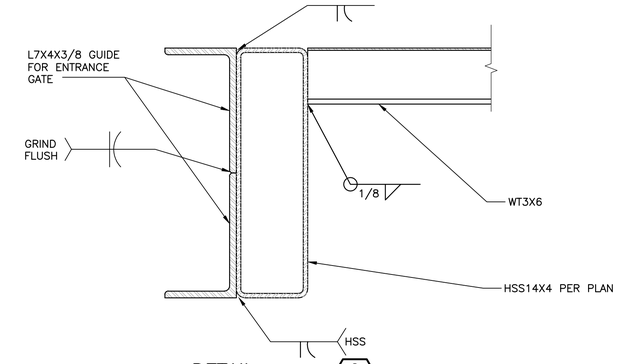

DETAIL 2 26 26
SCALE: 3" = 1'-0"

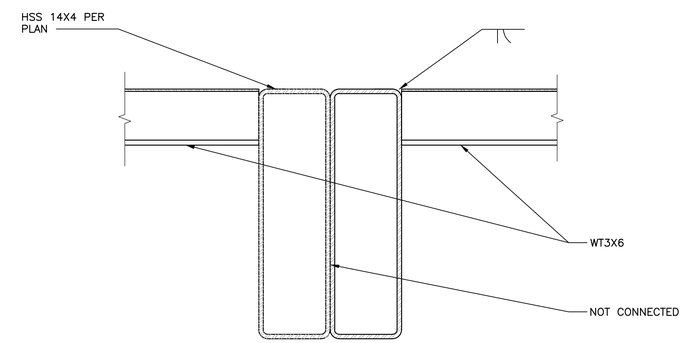

DETAIL 3 26 26
SCALE: 3" = 1'-0"

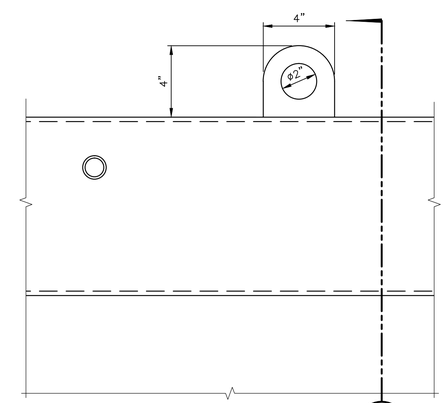

DETAIL 4 26 26
SCALE: 3" = 1'-0"

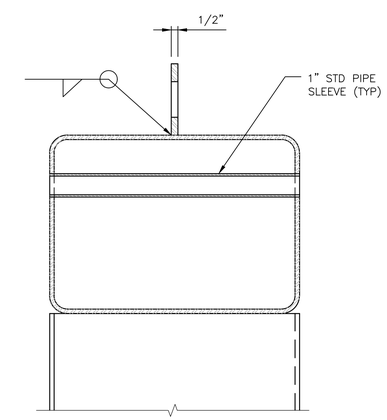

SECTION B 26 26
SCALE: 1 = 1'-0"

Resource Consultants, Inc.
REDMOND, WA.

WASHINGTON STATE
DEPARTMENT OF FISH AND WILDLIFE

SYM	DATE	REVISION DESCRIPTION	BY

APPROVED AND RELEASED FOR CONSTRUCTION

CHIEF ENGINEER ..... DATE: .....
PROGRAM ..... DATE: .....

0 — 1"
BAR MEASURES ONE INCH ON ORIGINAL DRAWINGS

DESIGNED BY F. POSTLEWAITE
CHECKED BY D. TURNER
DRAWN BY J. SCHULZ
DATE 10/2011

KALAMA FALLS HATCHERY

MODROW TRAP MODIFICATIONS
STRUCTURAL
HOLDING POOL WALLS–END PANEL DETAILS

PROJECT NO. CZ:H28:11–1

SHEET 26 OF 63

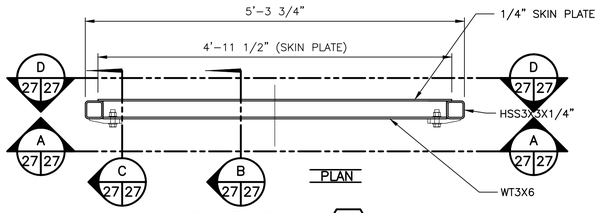

PANEL 3 (1 / 22 27)
SCALE: 1" = 1'-0"

NOTES:

1. COAT PER SPECIFICATION 09900 FINISHED FOR NON-GALVANIZED SUBMERGED SERVICE.

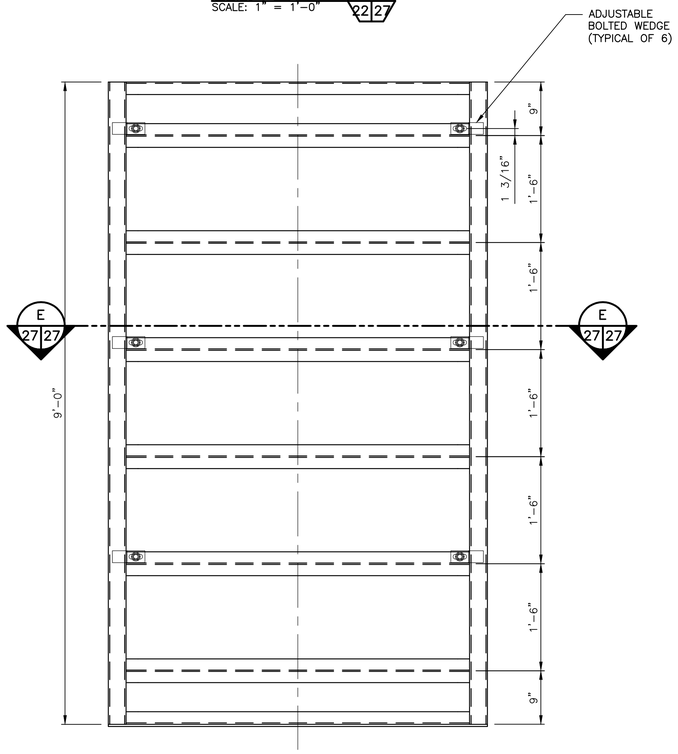

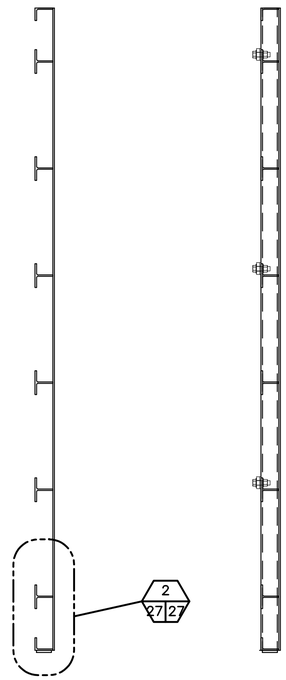

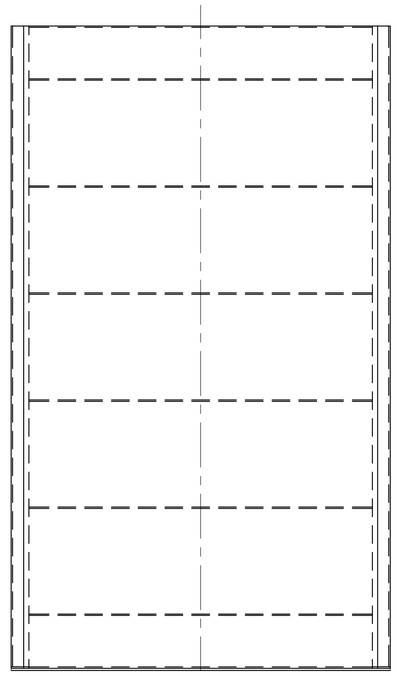

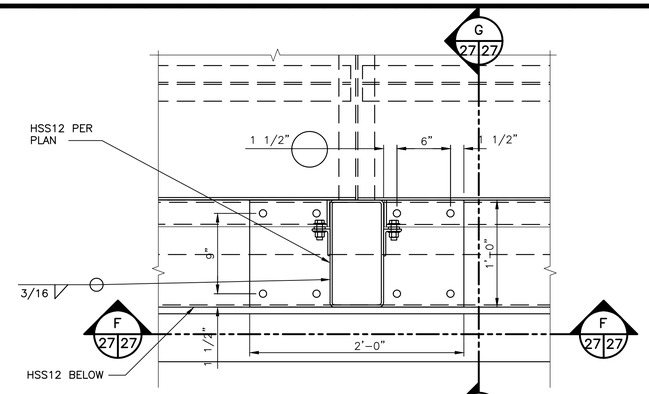

PLAN

COLUMN TO FLOOR CONNECTION (8 / 22 27)
SCALE: 1 1/2" = 1'-0"

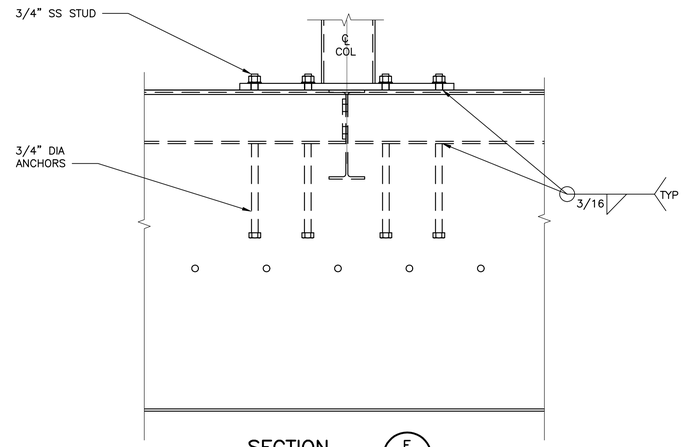

SECTION (F / 27 27)

SECTION (A / 27 27)

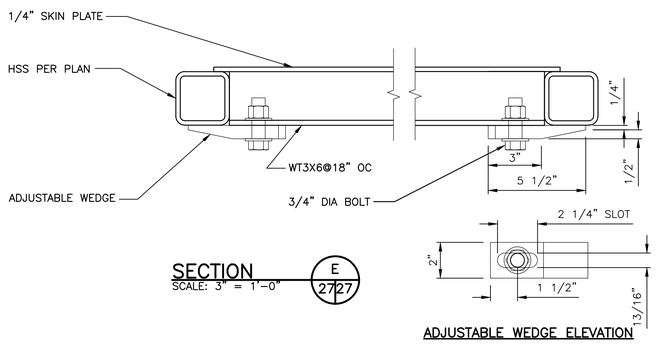

SECTION (E / 27 27)
SCALE: 3" = 1'-0"

ADJUSTABLE WEDGE ELEVATION

SECTION (B / 27 27)

SECTION (C / 27 27)

SECTION (D / 27 27)

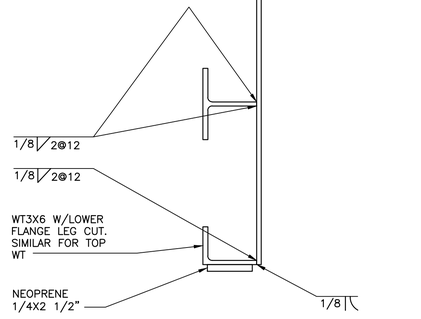

DETAIL. (2 / 27 27) (2 / 28 27)
SCALE: 3" = 1'-0"

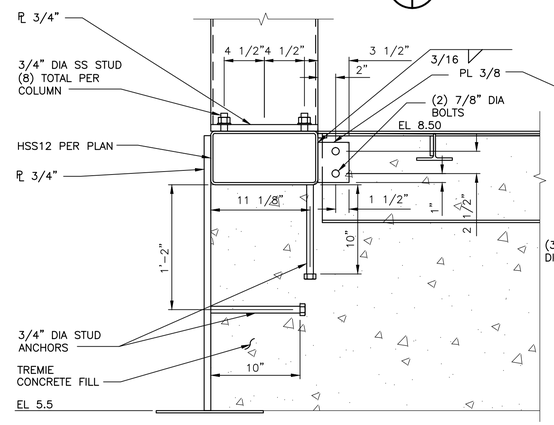

SECTION (G / 27 27) (4 / 25 27)

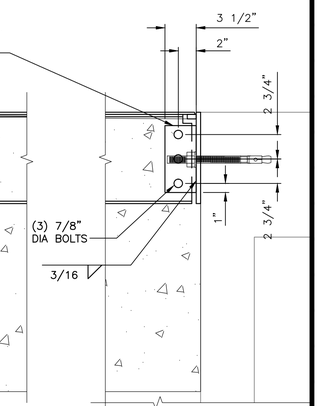

FOOTING CONNECTION (5 / 25 27)

Resource Consultants, Inc.
REDMOND, WA.

WASHINGTON STATE
DEPARTMENT OF FISH AND WILDLIFE

SYM	DATE	REVISION DESCRIPTION	BY

APPROVED AND RELEASED FOR CONSTRUCTION
CHIEF ENGINEER ..... DATE: .....
PROGRAM ..... DATE: .....

0 — 1"
BAR MEASURES ONE INCH ON ORIGINAL DRAWINGS

DESIGNED BY F. POSTLEWAITE
CHECKED BY D. TURNER
DRAWN BY J. SCHULZ
DATE 10/2011

KALAMA FALLS HATCHERY
MODROW TRAP MODIFICATIONS
STRUCTURAL
HOLDING POOL WALLS–PANEL DETAILS I

PROJECT NO. CZ:H28:11–1
SHEET 27 OF 63

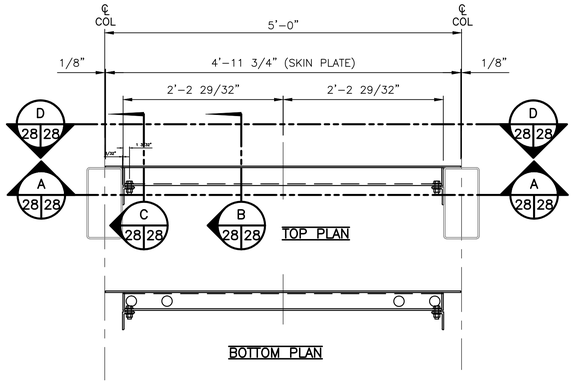

PANEL 8 (6 | 22|28)
SCALE: 1" = 1'-0"

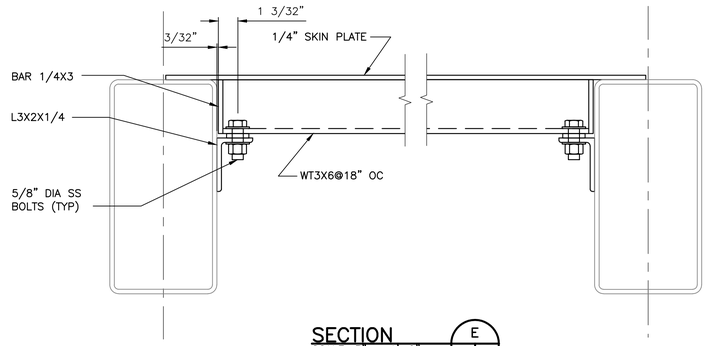

SECTION (E | 28|28)
SCALE: 3" = 1'-0"
(PANELS 4-7, & 9 SIMILAR)

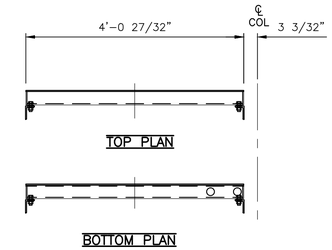

PANEL 4 (2 | 22|28)
SCALE: 1" = 1'-0"

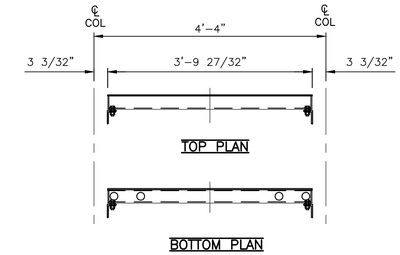

PANEL 5 (3 | 22|28)
SCALE: 1" = 1'-0"

NOTES:

1. COAT PER SPECIFICATION 09900 FINISHED FOR NON-GALVANIZED SUBMERGED SERVICE.

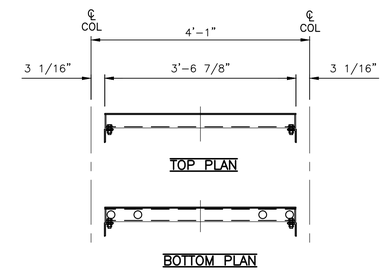

PANEL 6 (4 | 22|28)
SCALE: 1" = 1'-0"

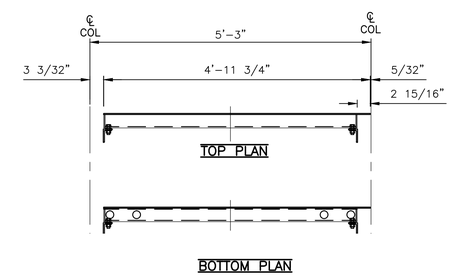

PANEL 7 (5 | 22|28)
SCALE: 1" = 1'-0"

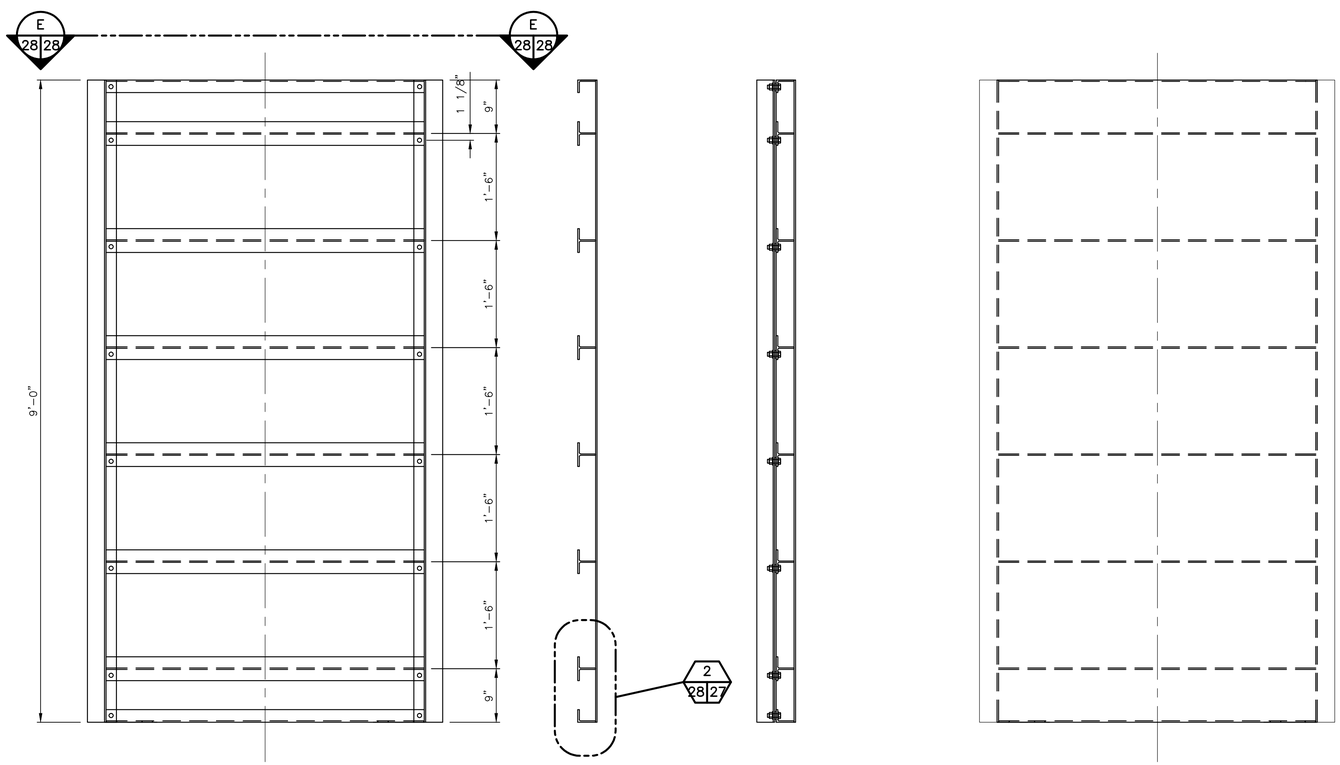

SECTION (A | 28|28)
(PANELS 4-7, & 9 SIMILAR)

SECTION (B | 28|28)
(PANELS 4-7, & 9 SIMILAR)

SECTION (C | 28|28)
(PANELS 4-7, & 9 SIMILAR)

SECTION (D | 28|28)
(PANELS 4-7, & 9 SIMILAR)

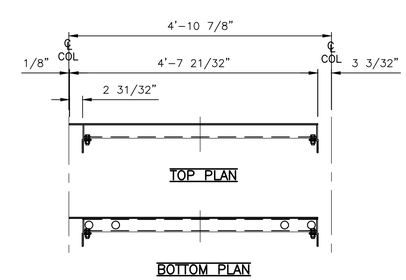

PANEL 9 (7 | 22|28)
SCALE: 1" = 1'-0"

Resource Consultants, Inc.
REDMOND, WA.

WASHINGTON STATE
DEPARTMENT OF FISH AND WILDLIFE

SYM	DATE	REVISION DESCRIPTION	BY

APPROVED AND RELEASED FOR CONSTRUCTION
CHIEF ENGINEER ..... DATE: .....
PROGRAM ..... DATE: .....

0 — 1"
BAR MEASURES ONE INCH ON ORIGINAL DRAWINGS

DESIGNED BY F. POSTLEWAITE
CHECKED BY D. TURNER
DRAWN BY J. SCHULZ
DATE 10/2011

KALAMA FALLS HATCHERY
MODROW TRAP MODIFICATIONS
STRUCTURAL
HOLDING POOL PANEL-DETAILS II

PROJECT NO. CZ:H28:11-1
SHEET 28 OF 63

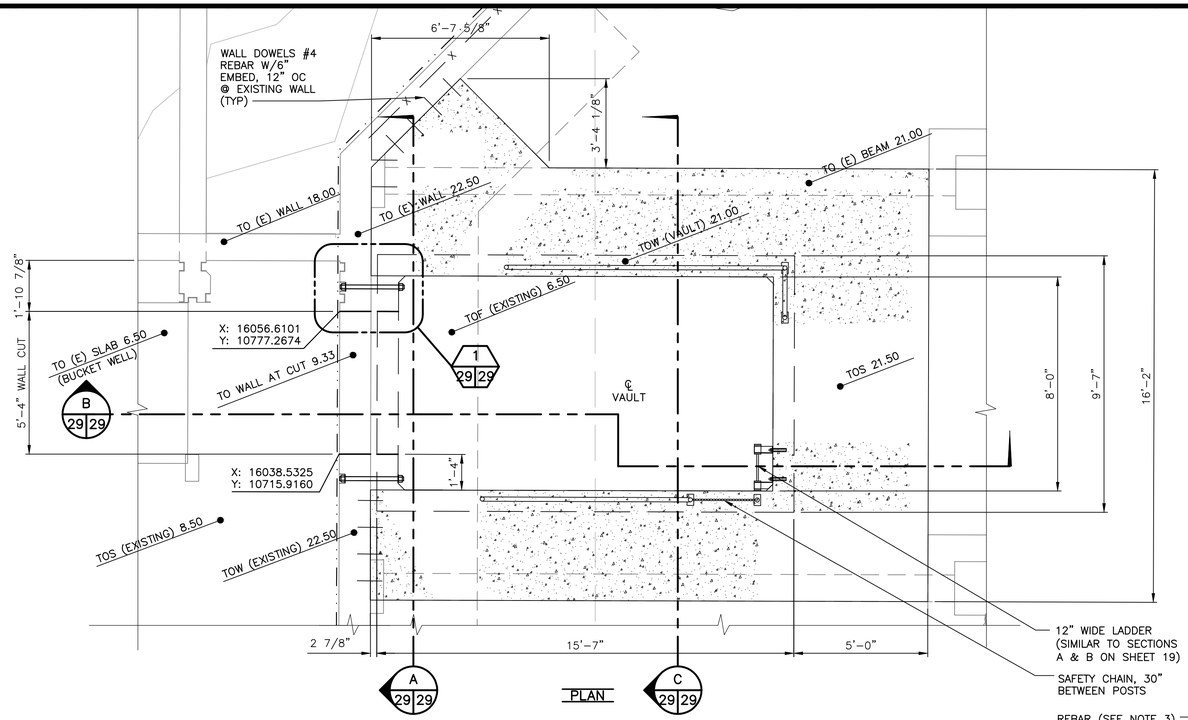

FISH LIFT SUMP 1/21 29 1/10 29
SCALE: 3/8" = 1'-0"

NOTES:

1. VAULT SHALL BE "OLDCASTLE PRECAST" MODEL NO B14-LA WITH SPECIAL EXTENSIONS.
2. SEE SHEET 9 FOR FISH SUMP COORDINATE LOCATIONS.
3. TOP SLAB REBAR SHALL BE #4@12" OC EW.

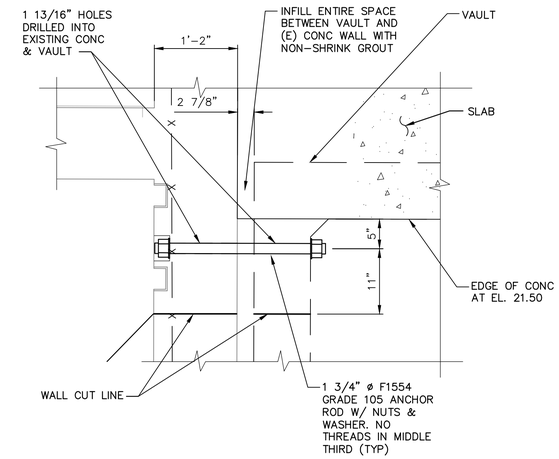

DETAIL 1/29 29
SCALE: 1" = 1'-0"

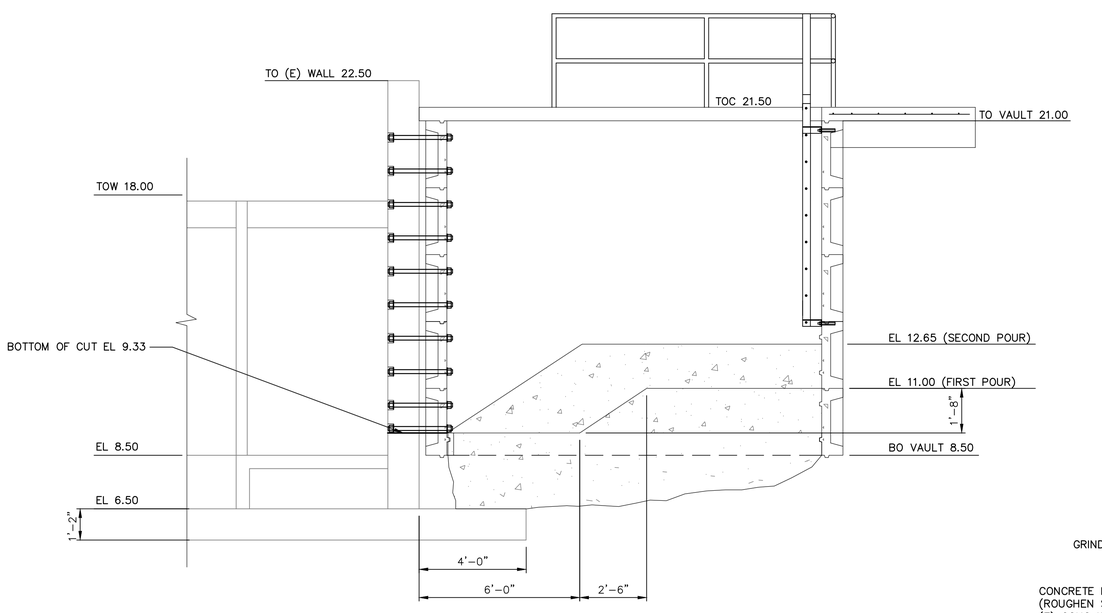

SECTION B/29 29
SCALE: 3/8" = 1'-0"

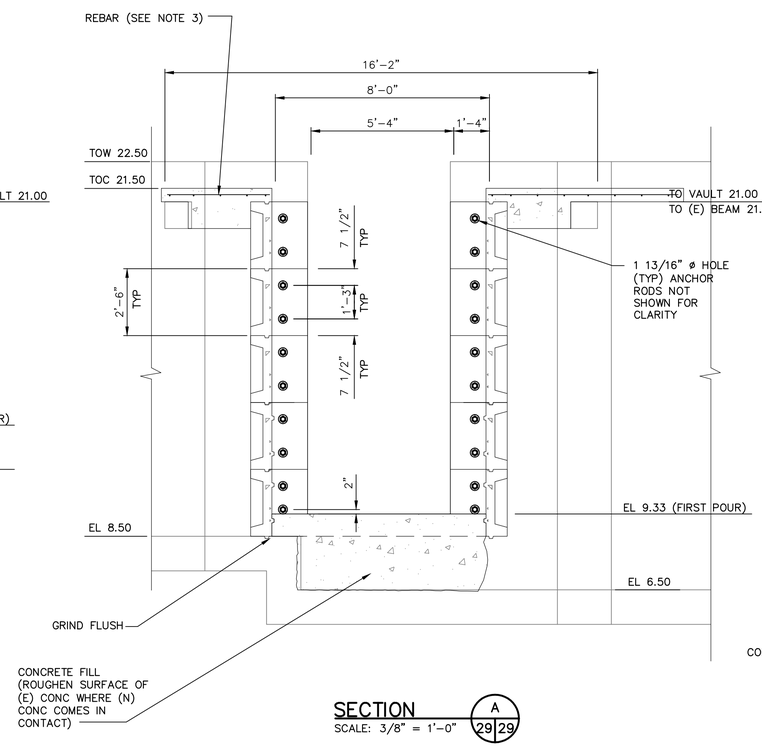

SECTION A/29 29
SCALE: 3/8" = 1'-0"

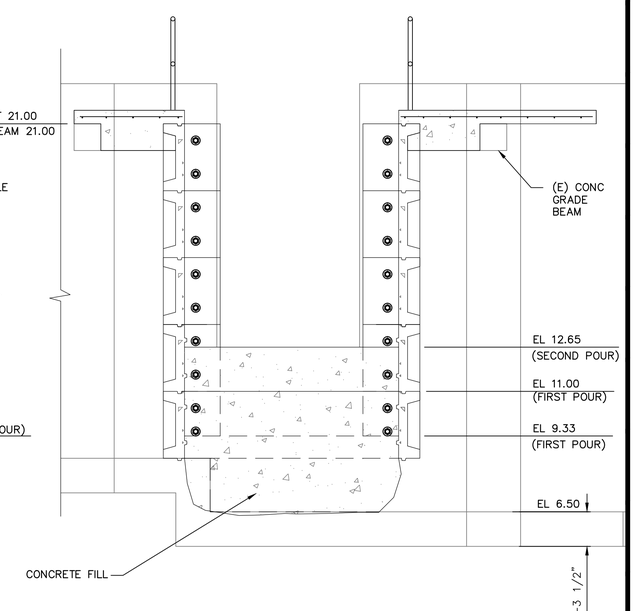

SECTION C/29 29
SCALE: 3/8" = 1'-0"

Resource Consultants, Inc.
REDMOND, WA.

WASHINGTON STATE
DEPARTMENT OF FISH AND WILDLIFE

SYM	DATE	REVISION DESCRIPTION	BY

APPROVED AND RELEASED FOR CONSTRUCTION
CHIEF ENGINEER ..... DATE: .....
PROGRAM ..... DATE: .....

0 — 1"
BAR MEASURES ONE INCH ON ORIGINAL DRAWINGS

DESIGNED BY F. POSTLEWAITE
CHECKED BY D. TURNER
DRAWN BY B. GOCHENOUR
DATE 10/2011

KALAMA FALLS HATCHERY
MODROW TRAP MODIFICATIONS
STRUCTURAL
FISH LIFT SUMP

PROJECT NO. CZ:H28:11-1
SHEET 29 OF 63

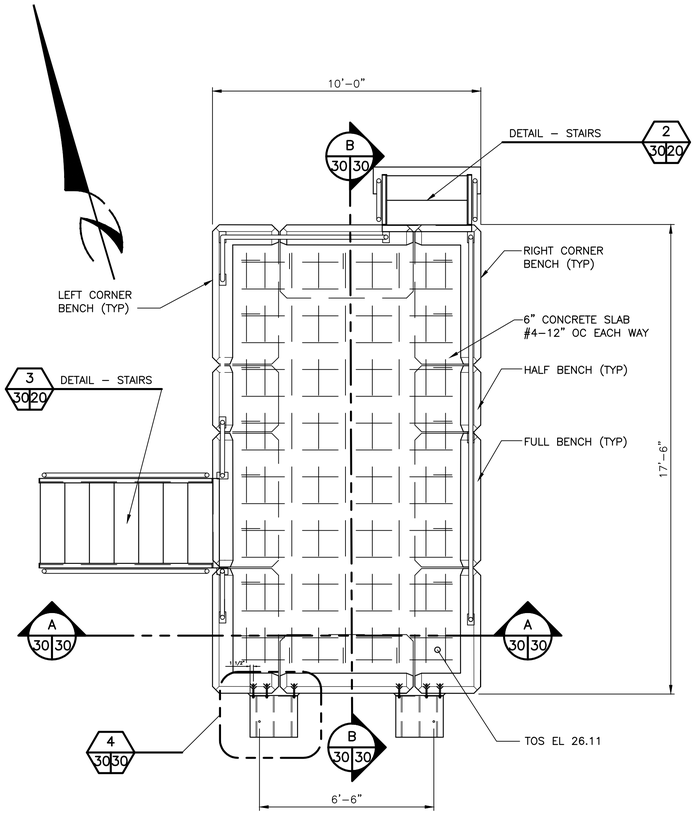

PLAN

FISH SORTING PLATFORM 1 10 30 / 1 21 30
SCALE: 3/8" = 1'-0"

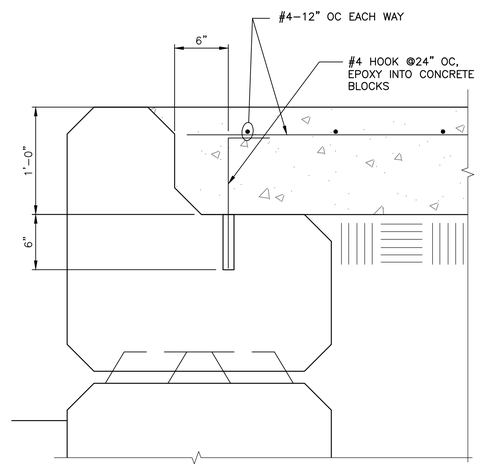

DETAIL 3 30 30
SCALE: 1–1/2" = 1'-0"

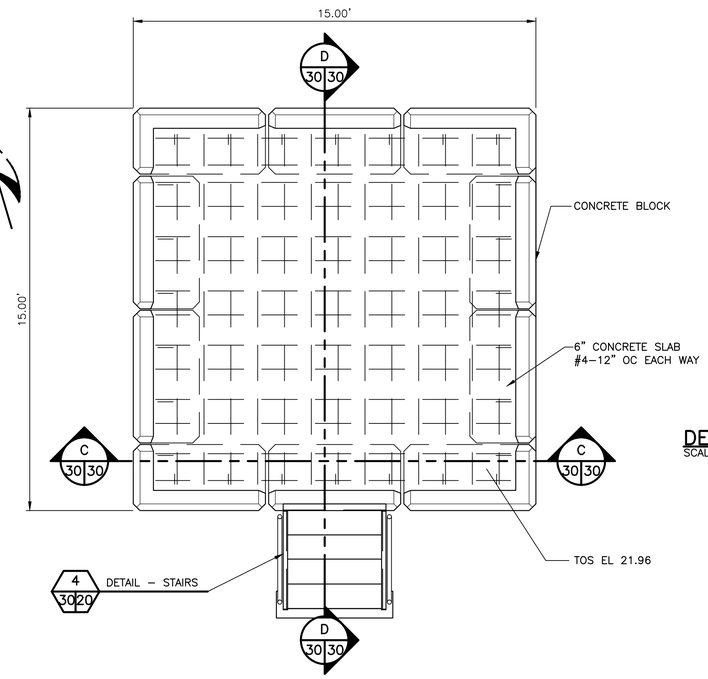

PLAN

FISH TOTE LOADING DOCK 2 10 30 / 2 21 30
SCALE: 3/8" = 1'-0"

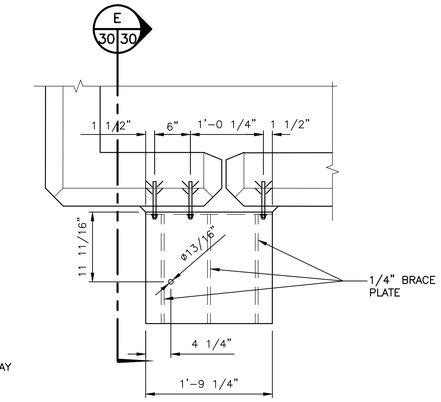

PLAN

DETAIL – SURPLUS TANK SUPPORT 4 30 30
SCALE: 1" = 1'-0"

NOTES:

1. (2) SURPLUS TANK SUPPORTS REQUIRED, (1) THUS AND (1) OPPOSITE.

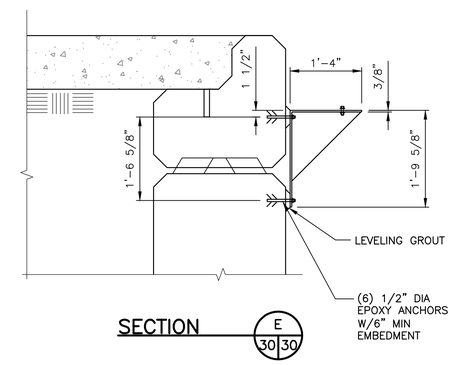

SECTION E 30 30

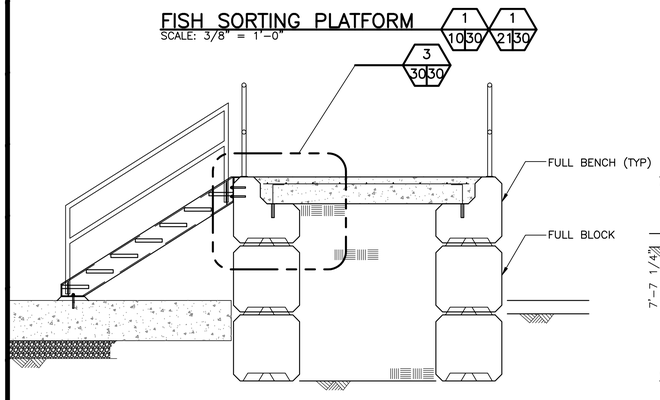

SECTION A 30 30
SCALE: 3/8" = 1'-0"

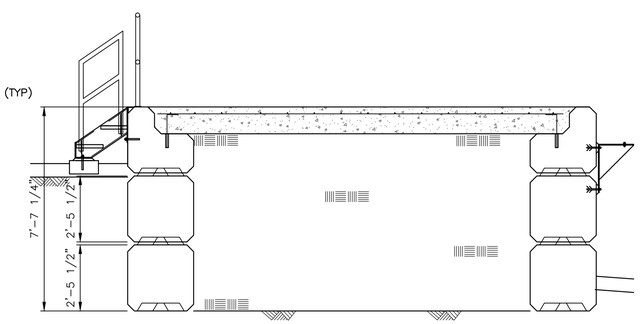

SECTION B 30 30
SCALE: 3/8" = 1'-0"

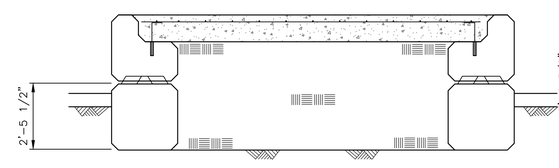

SECTION C 30 30
SCALE: 3/8" = 1'-0"

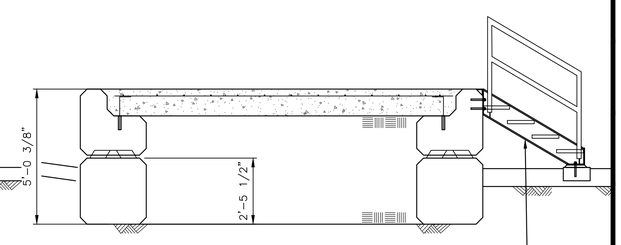

SECTION D 30 30
SCALE: 3/8" = 1'-0"

5 30 20

NOTES:

1. SEE SHEET 9 FOR COORDINATES TO LOCATE PLATFORMS.

Resource Consultants, Inc.
REDMOND, WA.

WASHINGTON STATE
DEPARTMENT OF FISH AND WILDLIFE

SYM	DATE	REVISION DESCRIPTION	BY
		APPROVED AND RELEASED FOR CONSTRUCTION	

CHIEF ENGINEER ..... DATE: .....
PROGRAM ..... DATE: .....

0 — 1"
BAR MEASURES ONE INCH ON ORIGINAL DRAWINGS

DESIGNED BY F. POSTLEWAITE
CHECKED BY D. TURNER
DRAWN BY B.GOCHENOUR
DATE 10/2011

KALAMA FALLS HATCHERY
MODROW TRAP MODIFICATIONS
STRUCTURAL
LOADING DOCK AND SORTING PLATFORMS

PROJECT NO. CZ:H28:11–1

SHEET 30 OF 63

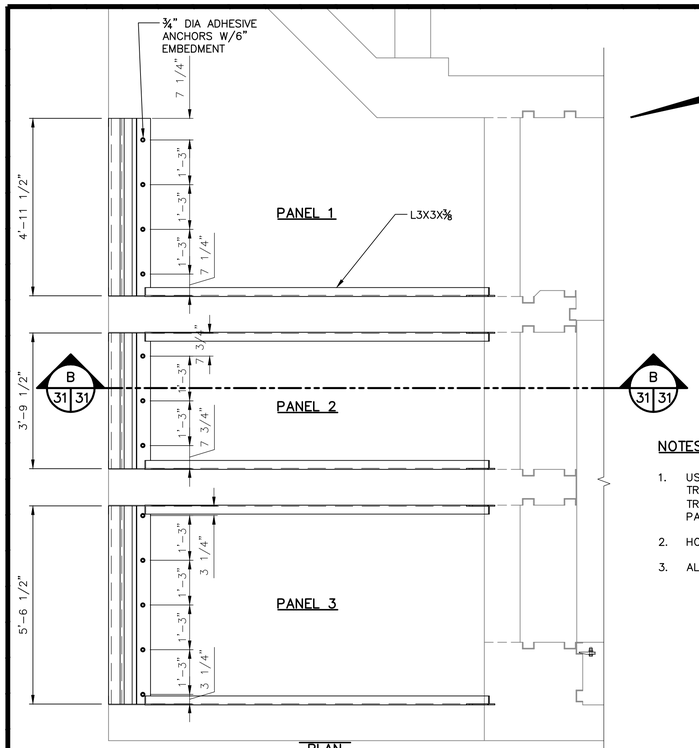

PLAN

DETAIL – TRASHRACK GUIDES (1 / 21 31)

SCALE: 1/2" = 1'-0"

NOTES:

1. USE 1" DIA BOLTS TO CONNECT TRASHRACK PANELS TO TRASHRACK GUIDES, (2) EACH PANEL.
2. HOT DIP GALVANIZE RACKS,
3. ALL FASTENERS SHALL BE SS.

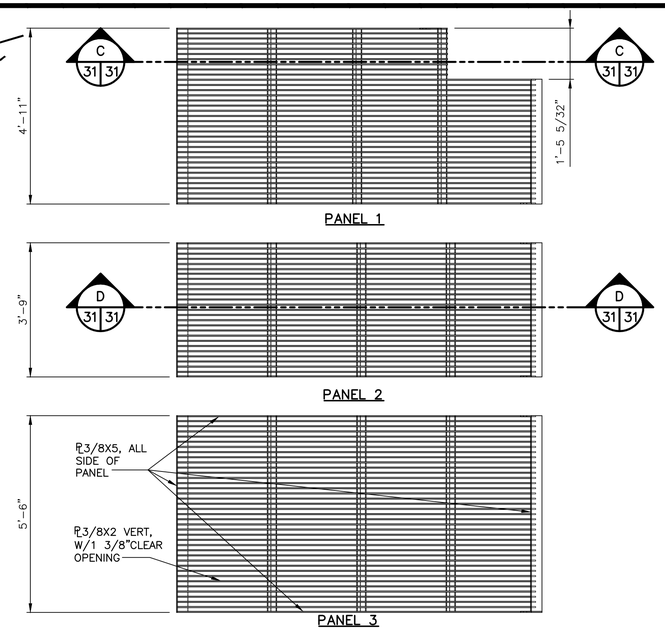

PLAN

DETAIL – TRASHRACK PANELS (2 / 21 31)

SCALE: 1/2" = 1'-0"

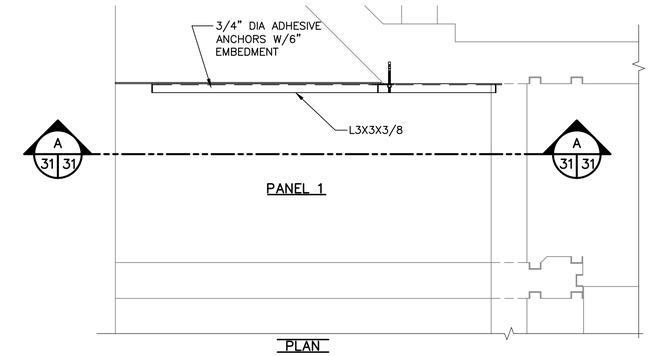

PLAN

DETAIL – CLOSURE PLATE (3 / 21 31)

SCALE: 1/2" = 1'-0"

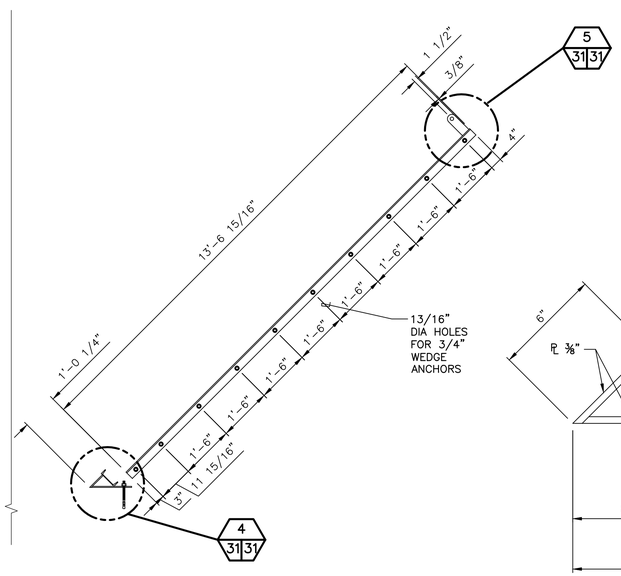

SECTION (B / 31 31)

SCALE: 1/2" = 1'-0"

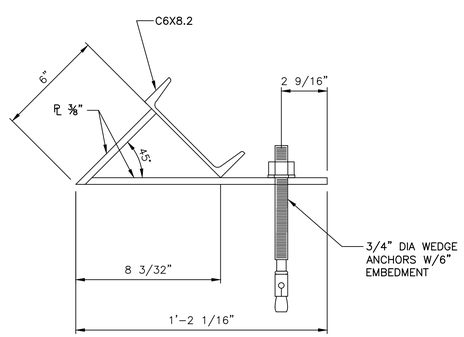

DETAIL – TRASHRACK LOWER GUIDE (4 / 31 31)

SCALE: 3" = 1'-0"

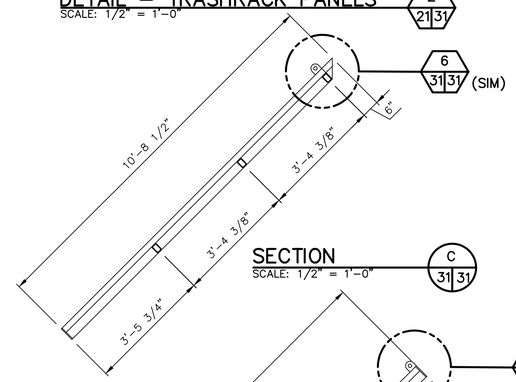

SECTION (C / 31 31)

SCALE: 1/2" = 1'-0"

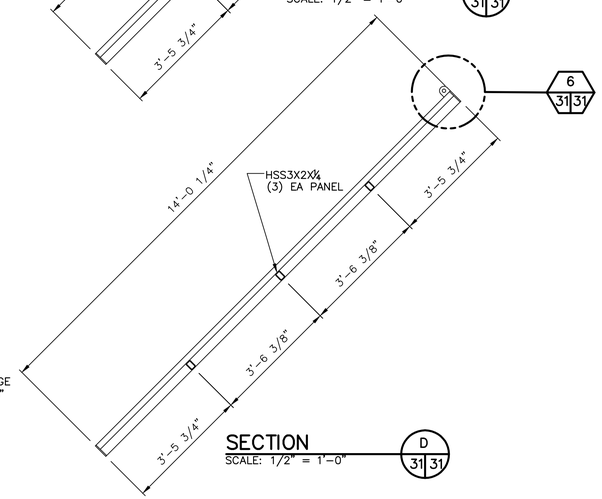

SECTION (D / 31 31)

SCALE: 1/2" = 1'-0"

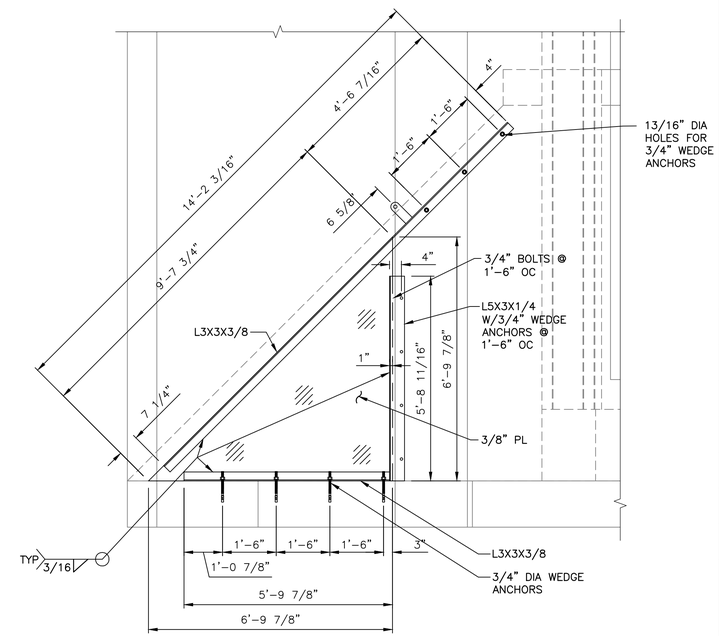

SECTION (A / 31 31)

SCALE: 1/2" = 1'-0"

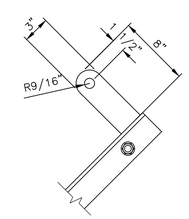

DETAIL – TRASHRACK CONN (5 / 31 31)

SCALE: 1-1/2" = 1'-0"

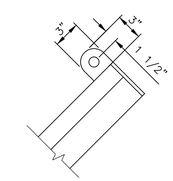

DETAIL – CONN TO SUPPORT (6 / 31 31)

SCALE: 1-1/2" = 1'-0"

Resource Consultants, Inc.
REDMOND, WA.

WASHINGTON STATE
DEPARTMENT OF FISH AND WILDLIFE

SYM	DATE	REVISION DESCRIPTION	BY

APPROVED AND RELEASED FOR CONSTRUCTION

CHIEF ENGINEER ..... DATE: .....
PROGRAM ..... DATE: .....

0 — 1"
BAR MEASURES ONE INCH ON ORIGINAL DRAWINGS

DESIGNED BY F. POSTLEWAITE
CHECKED BY D. TURNER
DRAWN BY J. SCHULZ
DATE 10/2011

KALAMA FALLS HATCHERY
MODROW TRAP MODIFICATIONS
STRUCTURAL
TRASHRACK PANELS AND GUIDES

PROJECT NO. CZ:H28:11-1

SHEET 31 OF 63

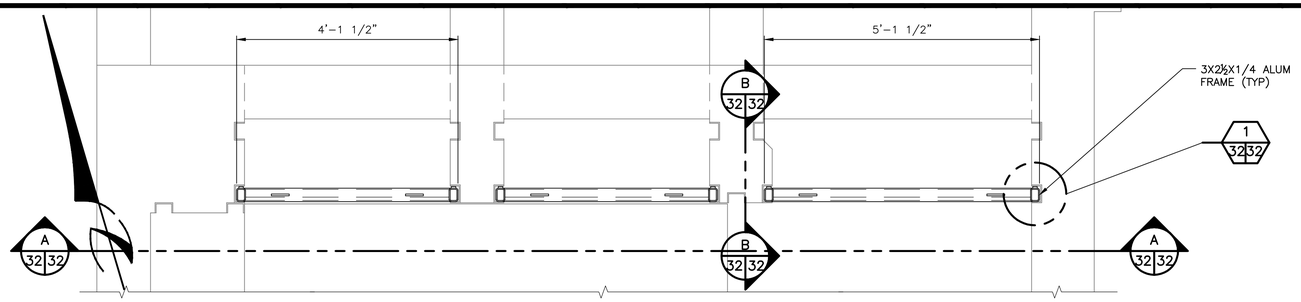

PLAN

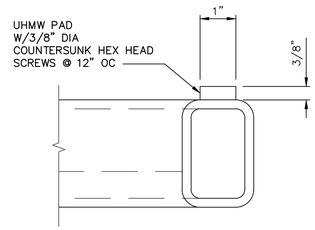

DETAIL – PICKET – 1 (15 / 21 32) (15 / 45 32)
SCALE: 3/4" = 1'-0" (2 REQ'D)

DETAIL – PICKET – 2 (16 / 21 32) (16 / 45 32)
SCALE: 3/4" = 1'-0" (1 REQ'D)

DETAIL (1 / 32 32)
SCALE: 1" = 1'-0"

(TYP OF EACH PANEL END)

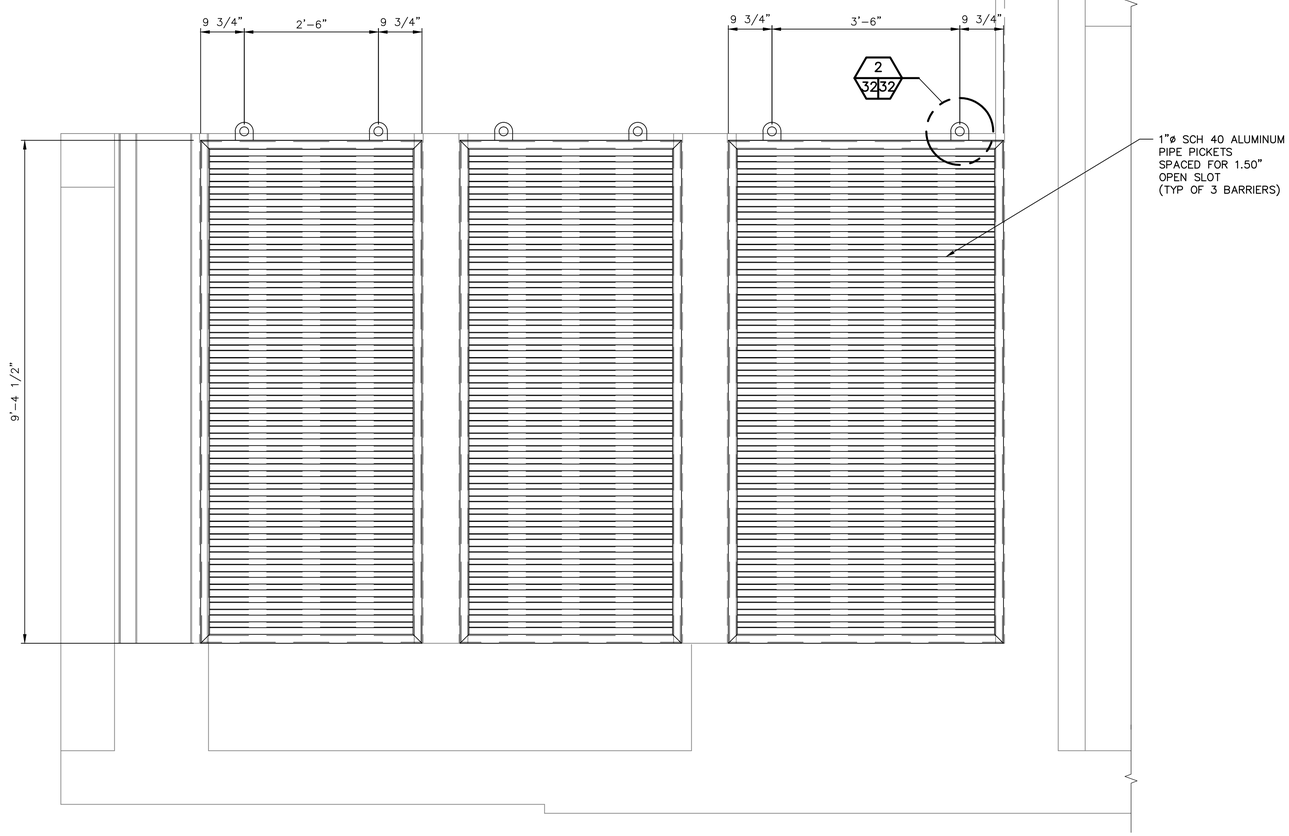

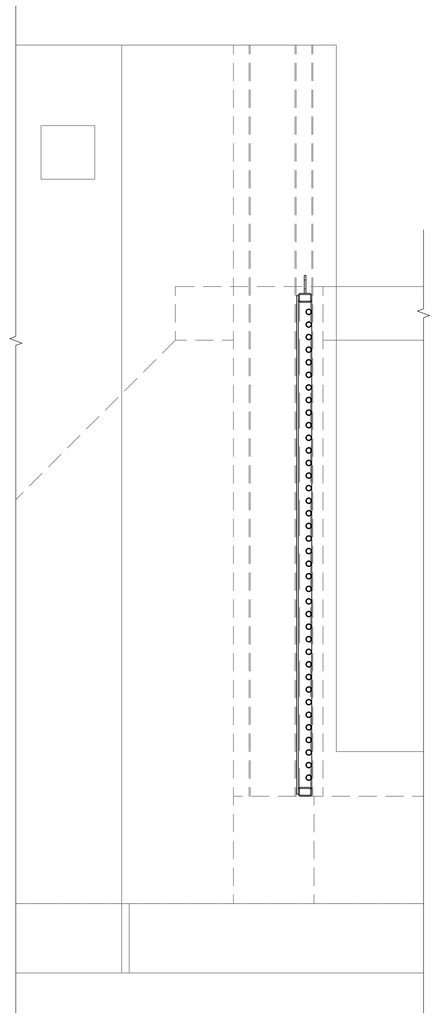

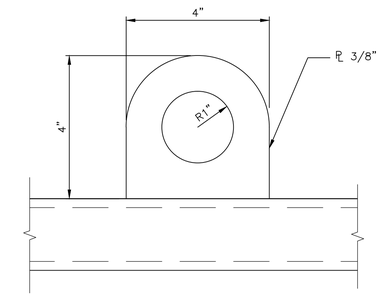

DETAIL (2 / 32 32)
SCALE: 1" = 1'-0"

SECTION (A / 32 32)
SCALE: 3/4" = 1'-0"

SECTION (B / 32 32)
SCALE: 3/4" = 1'-0"

NOTES:

1. FABRICATE BARRIER ASSEMBLIES FROM ALUMINUM.
2. VERIFY EXISTING SLOT DIMENSION TO ALLOW ½" OVERALL CLEARANCES.

Resource Consultants, Inc.
REDMOND, WA.

WASHINGTON STATE
DEPARTMENT OF FISH AND WILDLIFE

SYM	DATE	REVISION DESCRIPTION	BY

APPROVED AND RELEASED FOR CONSTRUCTION

CHIEF ENGINEER ..... DATE: .....
PROGRAM ..... DATE: .....

0 — 1"
BAR MEASURES ONE INCH ON ORIGINAL DRAWINGS

DESIGNED BY F. POSTLEWAITE
CHECKED BY D. TURNER
DRAWN BY J. SCHULZ
DATE 10/2011

KALAMA FALLS HATCHERY
MODROW TRAP MODIFICATIONS
STRUCTURAL
REPLACEMENT PICKETS

PROJECT NO. CZ:H28:11–1

SHEET 32 OF 63

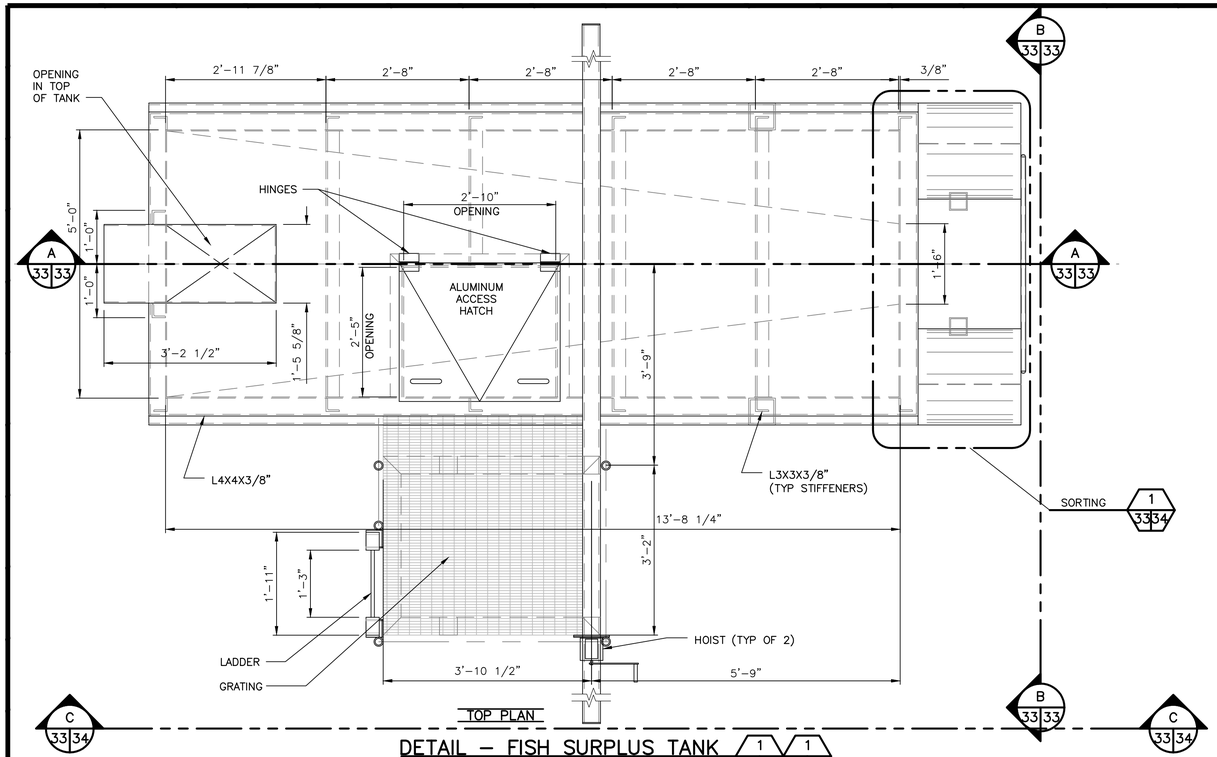

DETAIL – FISH SURPLUS TANK (1 21 33) (1 10 33)

SCALE: 3/4" = 1'-0"

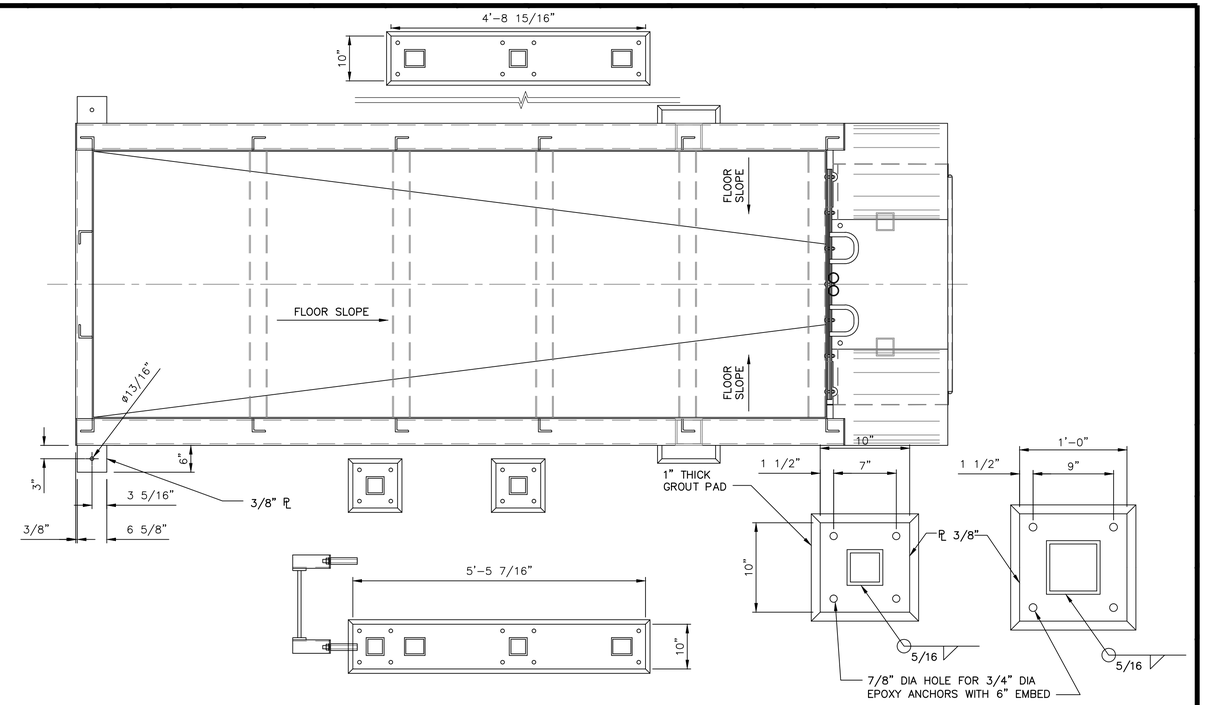

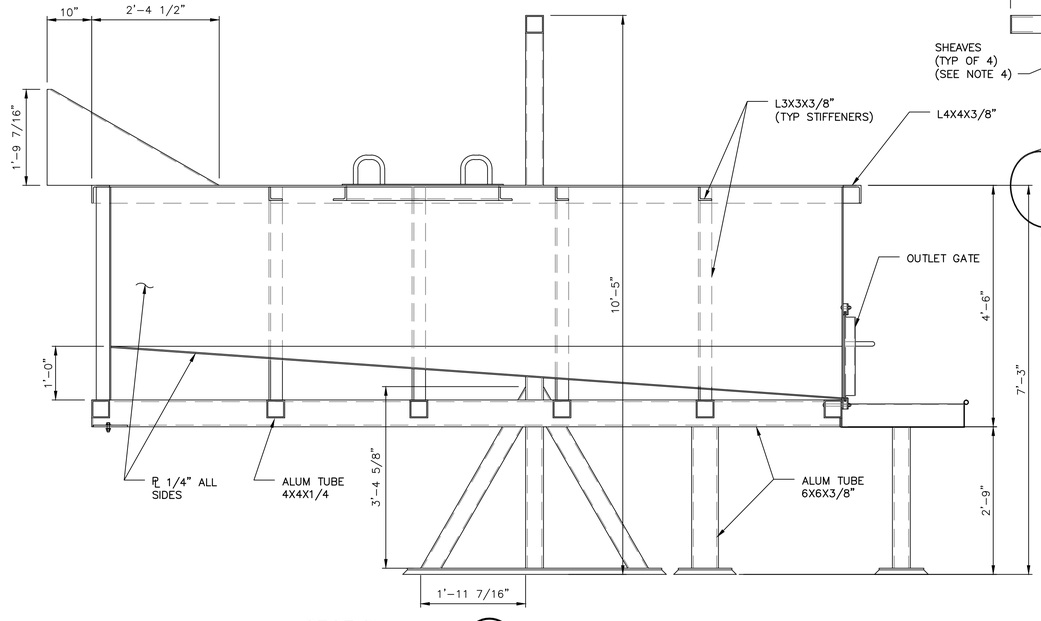

SECTION (A 33 33)

SCALE: 3/4" = 1'-0"

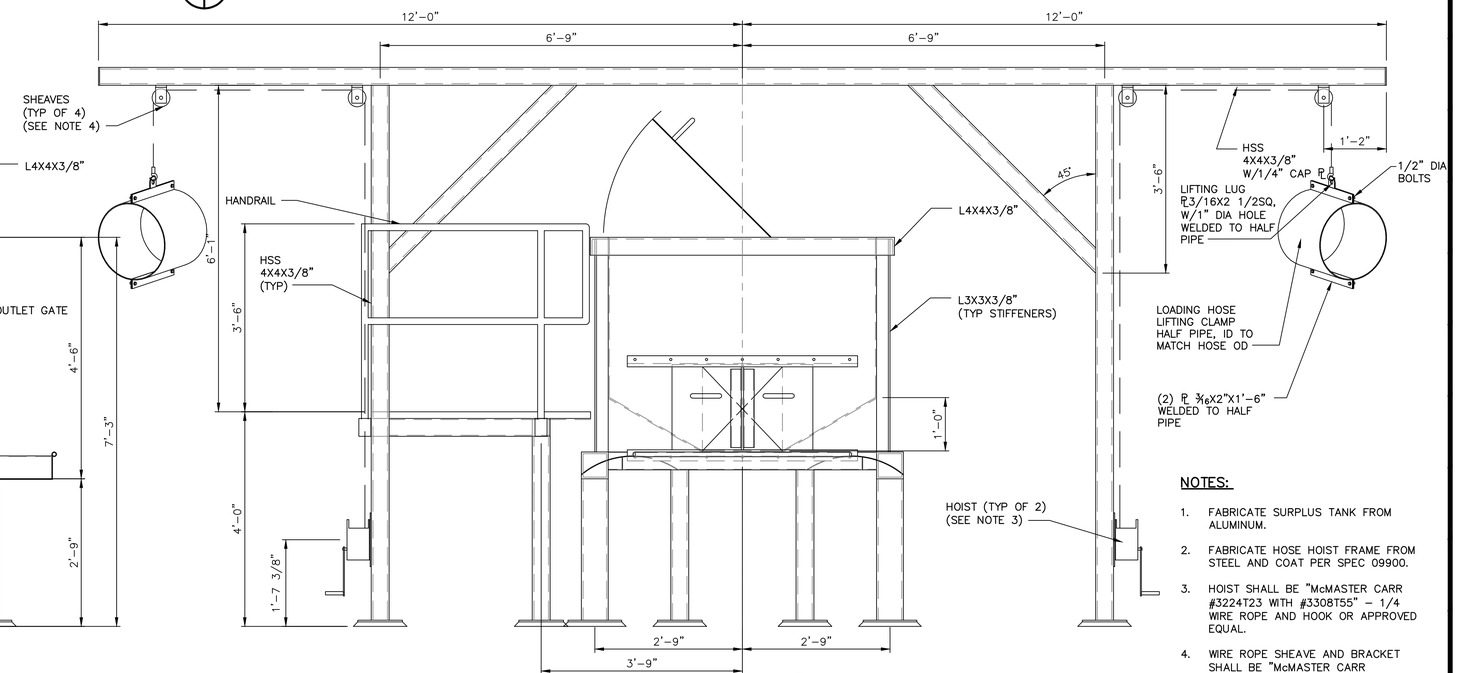

SECTION (B 33 33)

SCALE: 3/4" = 1'-0"

NOTES:

1. FABRICATE SURPLUS TANK FROM ALUMINUM.
2. FABRICATE HOSE HOIST FRAME FROM STEEL AND COAT PER SPEC 09900.
3. HOIST SHALL BE "McMASTER CARR #3224T23 WITH #3308T55" – 1/4 WIRE ROPE AND HOOK OR APPROVED EQUAL.
4. WIRE ROPE SHEAVE AND BRACKET SHALL BE "McMASTER CARR #32225T41" OR APPROVED EQUAL.

Resource Consultants, Inc.
REDMOND, WA.

WASHINGTON STATE
DEPARTMENT OF FISH AND WILDLIFE

SYM	DATE	REVISION DESCRIPTION	BY
		APPROVED AND RELEASED FOR CONSTRUCTION	

CHIEF ENGINEER ..... DATE: .....
PROGRAM ..... DATE: .....

0 — 1"
BAR MEASURES ONE INCH ON ORIGINAL DRAWINGS

DESIGNED BY F. POSTLEWAITE
CHECKED BY D. TURNER
DRAWN BY J. SCHULZ
DATE 10/2011

KALAMA FALLS HATCHERY

MODROW TRAP MODIFICATIONS
STRUCTURAL
FISH SURPLUS TANK

PROJECT NO. CZ:H28:11–1

SHEET 33 OF 63

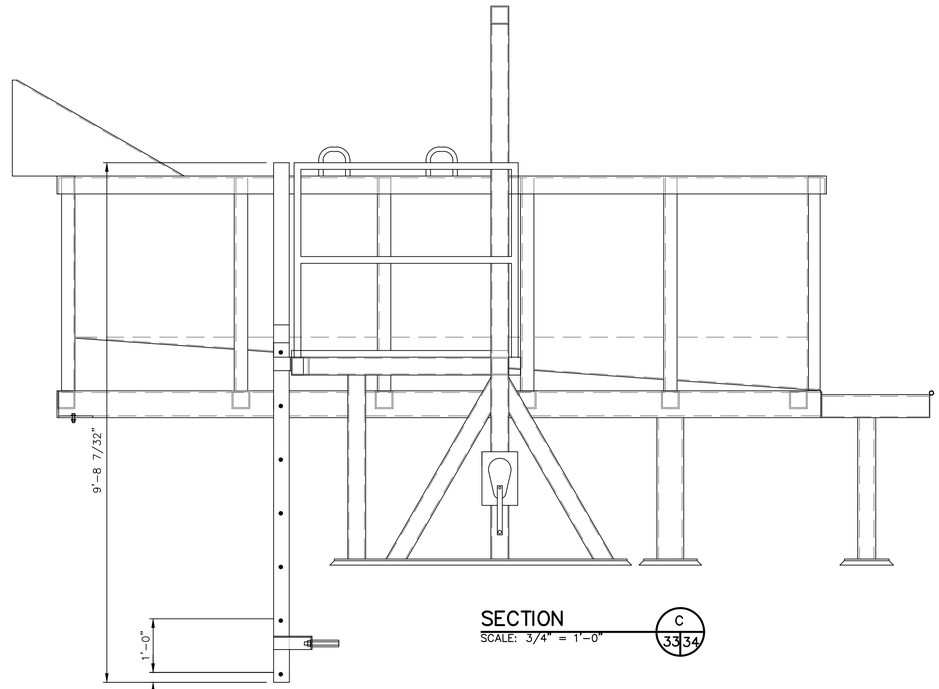

SECTION C 33|34
SCALE: 3/4" = 1'-0"

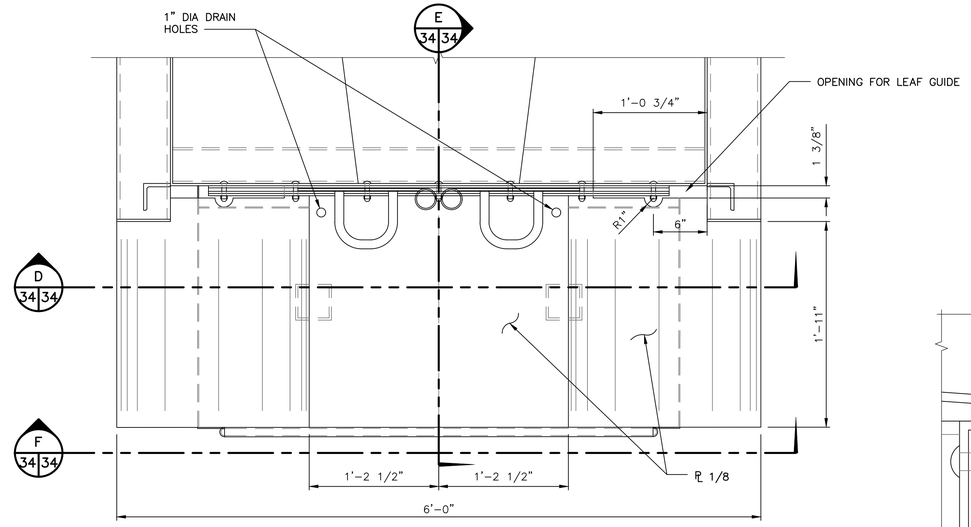

DETAIL – SORTING 1 33|34
SCALE: 1-1/2" = 1'-0"

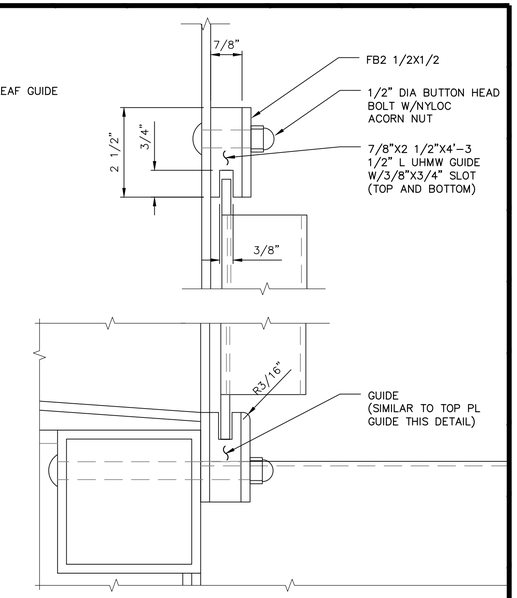

DETAIL 2 34|34
SCALE: 6" = 1'-0"

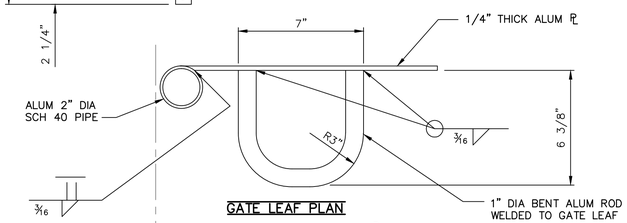

GATE LEAF PLAN

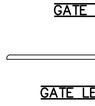

GATE LEAF LOWER PLAN

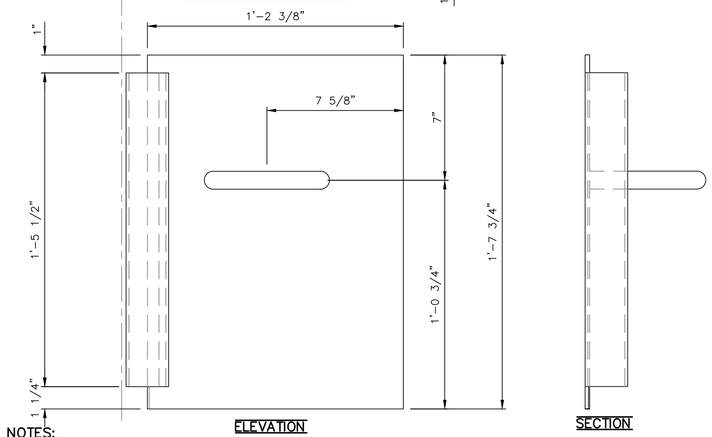

NOTES:

1. (2) GATE LEAFS REQUIRED, (1) THUS AND (1) OPPOSITE.

DETAIL – GATE LEAF 3 34|34
SCALE: 3" = 1'-0"

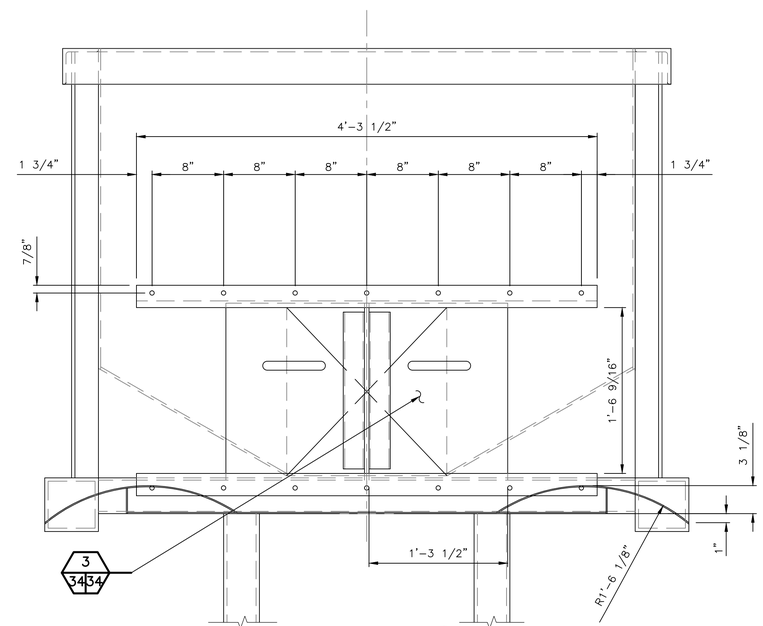

SECTION D 34|34
SCALE: 3" = 1'-0"

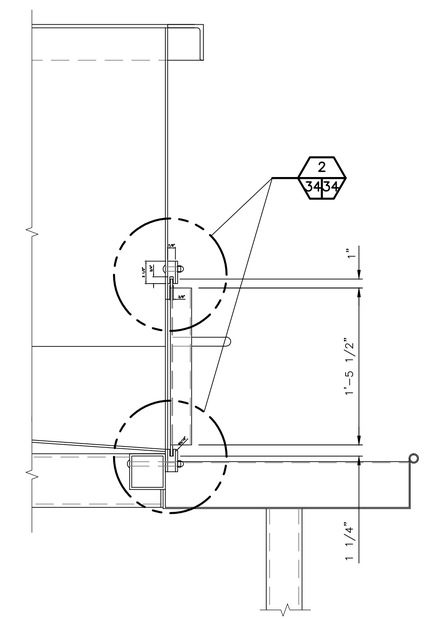

SECTION E 34|34
SCALE: 3" = 1'-0"

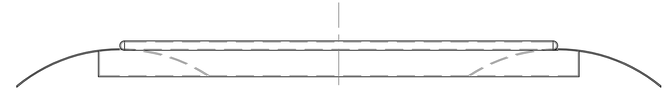

SECTION F 34|34
SCALE: 3" = 1'-0"

Resource Consultants, Inc.
REDMOND, WA.

WASHINGTON STATE
DEPARTMENT OF FISH AND WILDLIFE

SYM	DATE	REVISION DESCRIPTION	BY

APPROVED AND RELEASED FOR CONSTRUCTION
CHIEF ENGINEER ..... DATE: .....
PROGRAM ..... DATE: .....

0 — 1"
BAR MEASURES ONE INCH ON ORIGINAL DRAWINGS

DESIGNED BY F. POSTLEWAITE
CHECKED BY D. TURNER
DRAWN BY J. SCHULZ
DATE 10/2011

KALAMA FALLS HATCHERY
MODROW TRAP MODIFICATIONS
STRUCTURAL
FISH SURPLUS TANK – DETAILS

PROJECT NO. CZ:H28:11-1
SHEET 34 OF 63

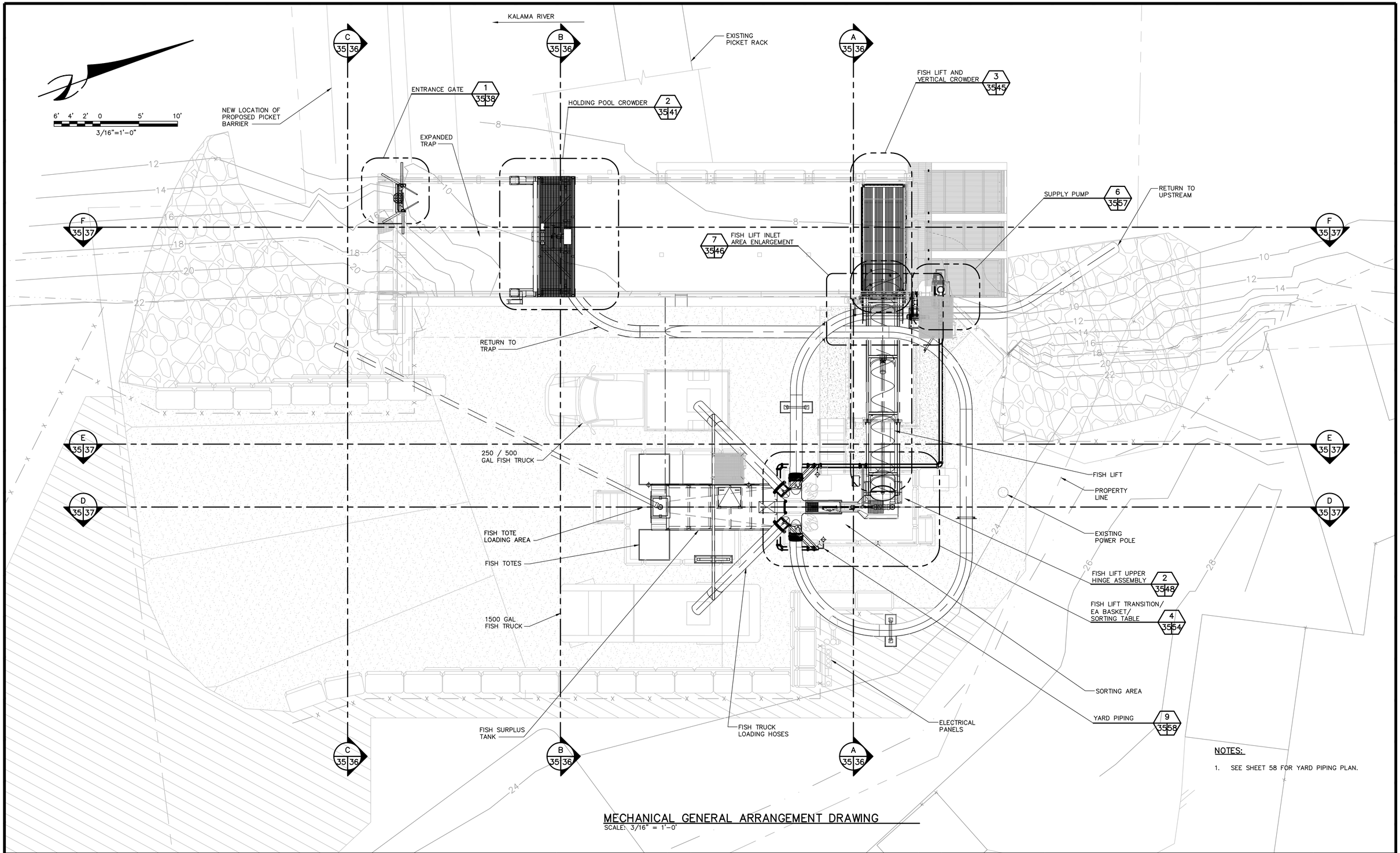

NOTES:

1. SEE SHEET 58 FOR YARD PIPING PLAN.

MECHANICAL GENERAL ARRANGEMENT DRAWING
SCALE: 3/16" = 1'-0'

Resource Consultants, Inc.
REDMOND, WA.

WASHINGTON STATE
DEPARTMENT OF FISH AND WILDLIFE

SYM	DATE	REVISION DESCRIPTION	BY

APPROVED AND RELEASED FOR CONSTRUCTION

CHIEF ENGINEER ..... DATE: .....
PROGRAM ..... DATE: .....

0 — 1"
BAR MEASURES ONE INCH ON ORIGINAL DRAWINGS

DESIGNED BY F. POSTLEWAITE
CHECKED BY D. TURNER
DRAWN BY J. SCHULZ
DATE 10/2011

KALAMA FALLS HATCHERY
MODROW TRAP MODIFICATIONS
MECHANICAL
GENERAL ARRANGEMENT PLAN

PROJECT NO. CZ:H28:11-1

SHEET 35 OF 63

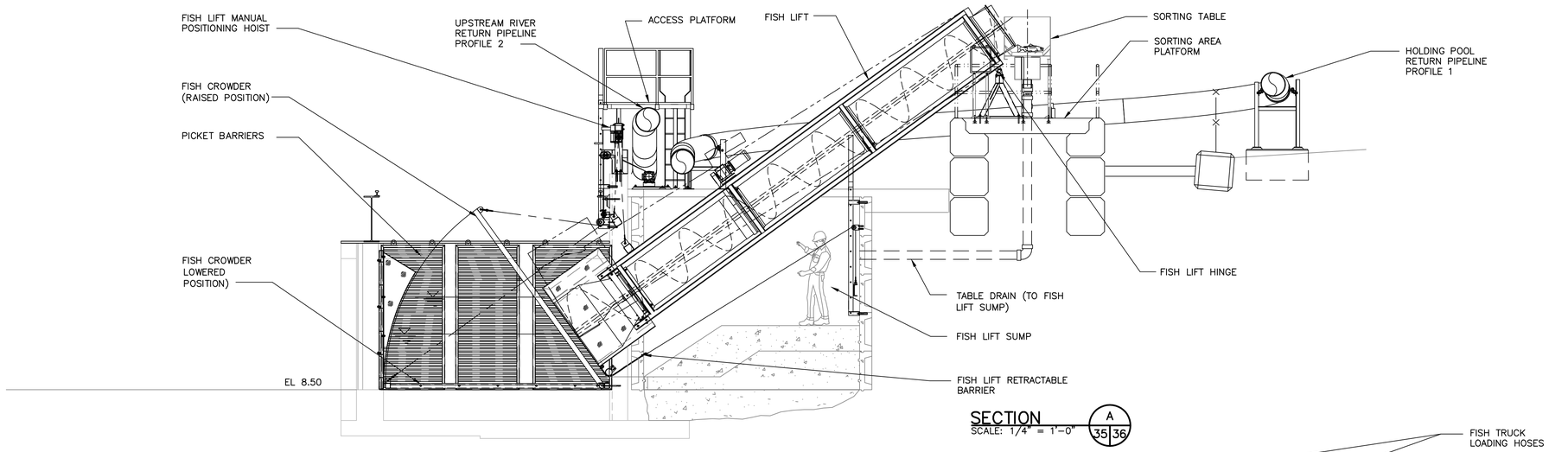

SECTION A 35 36
SCALE: 1/4" = 1'-0"

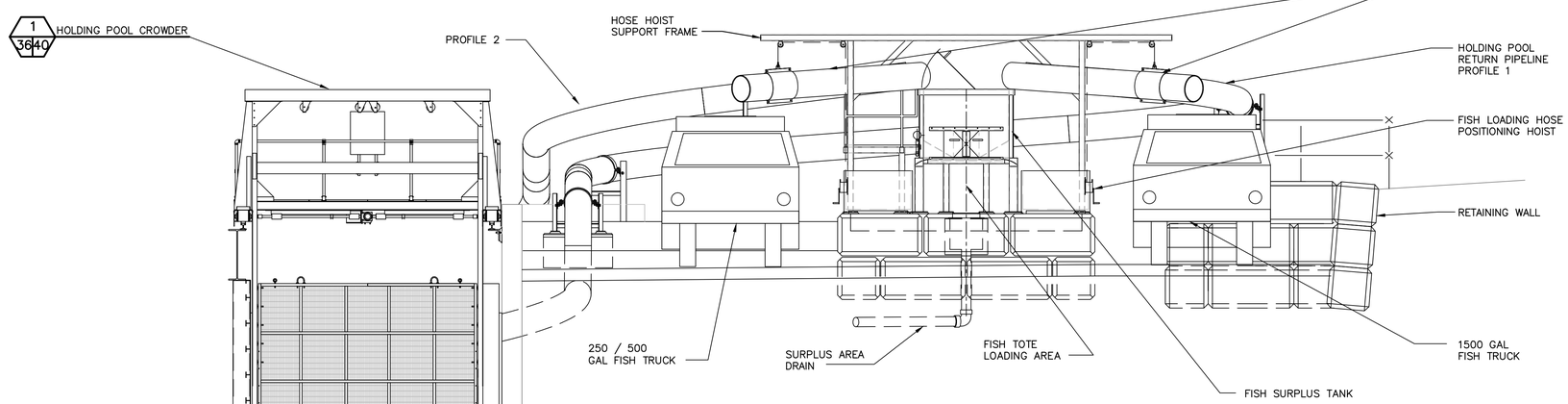

SECTION B 35 36
SCALE: 1/4" = 1'-0"

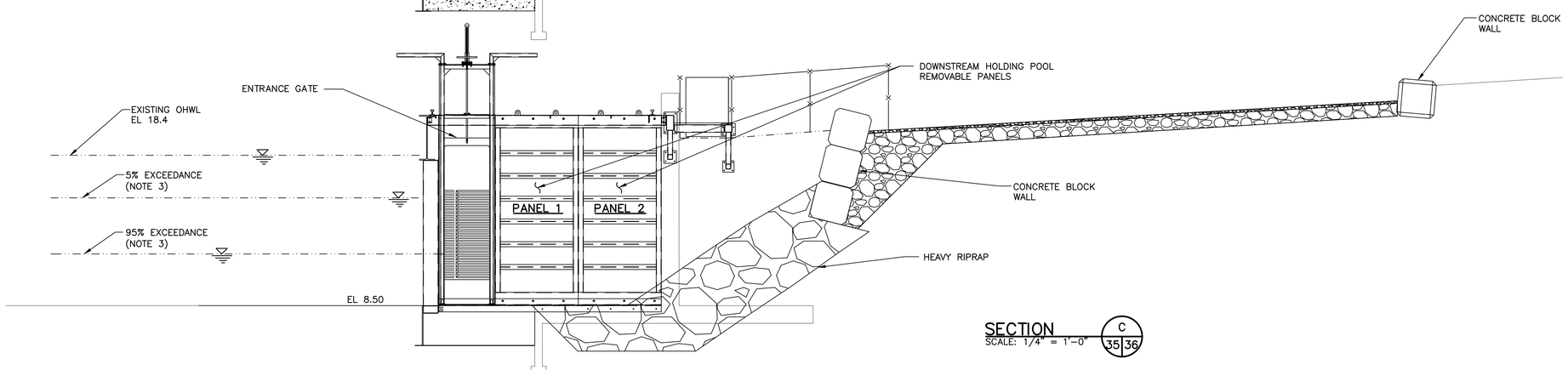

SECTION C 35 36
SCALE: 1/4" = 1'-0"

Resource Consultants, Inc.
REDMOND, WA.

WASHINGTON STATE
DEPARTMENT OF FISH AND WILDLIFE

SYM	DATE	REVISION DESCRIPTION	BY
		APPROVED AND RELEASED FOR CONSTRUCTION	

CHIEF ENGINEER ..... DATE: .....
PROGRAM ..... DATE: .....

0 — 1"
BAR MEASURES ONE INCH ON ORIGINAL DRAWINGS

DESIGNED BY F. POSTLEWAITE
CHECKED BY D. TURNER
DRAWN BY J. SCHULZ
DATE 10/2011

KALAMA FALLS HATCHERY
MODROW TRAP MODIFICATIONS
MECHANICAL
SECTIONS – II

PROJECT NO. CZ:H28:11–1
SHEET 36 OF 63

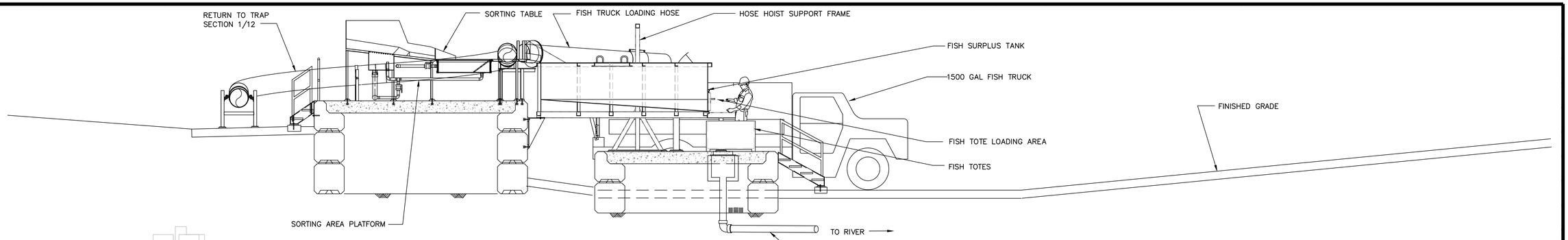

SECTION D 35/37
SCALE: 1/4" = 1'-0"

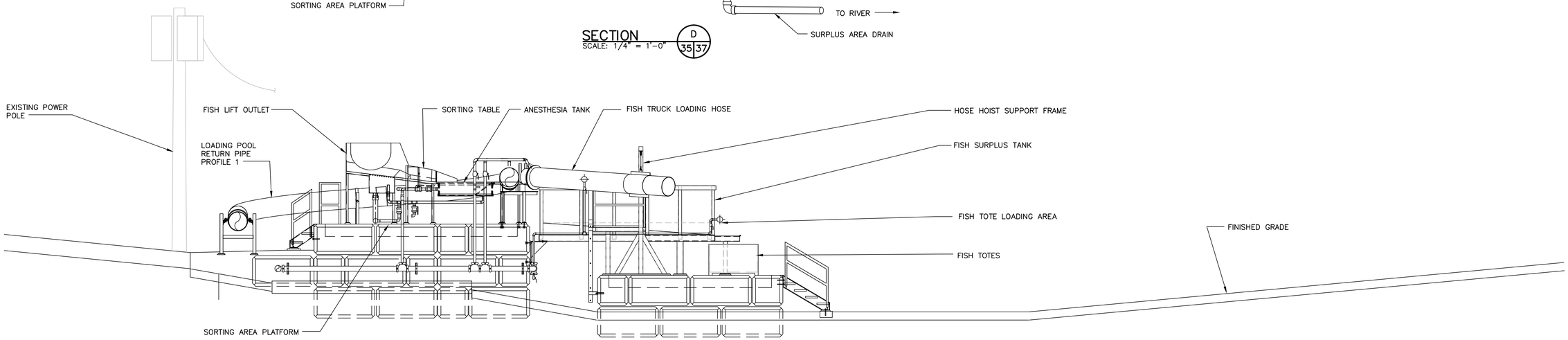

SECTION E 35/37
SCALE: 1/4" = 1'-0"

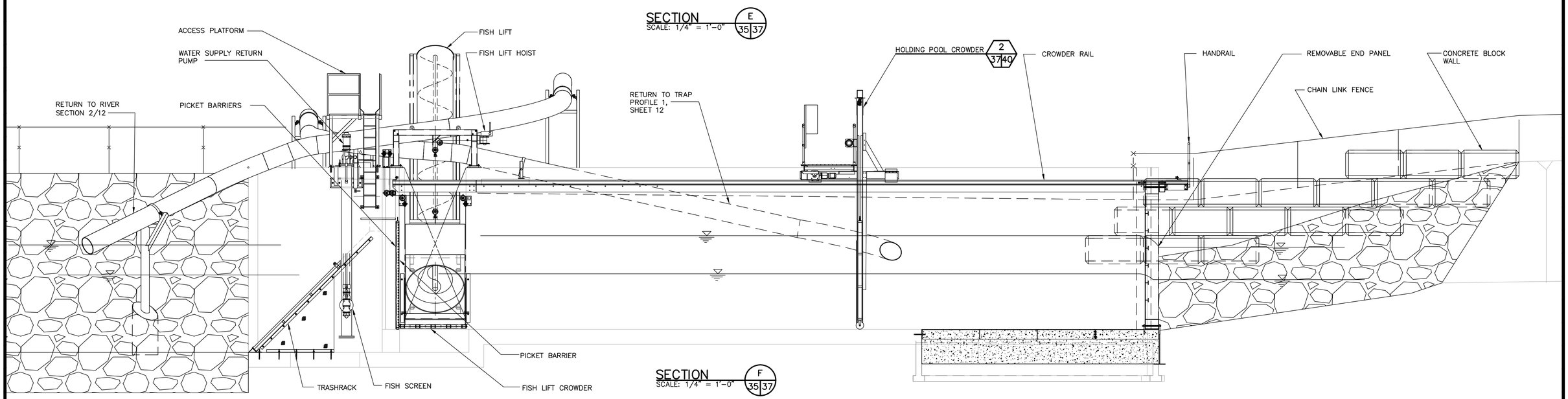

SECTION F 35/37
SCALE: 1/4" = 1'-0"

Resource Consultants, Inc.
REDMOND, WA.

WASHINGTON STATE
DEPARTMENT OF FISH AND WILDLIFE

SYM	DATE	REVISION DESCRIPTION	BY

APPROVED AND RELEASED FOR CONSTRUCTION
CHIEF ENGINEER ..... DATE: .....
PROGRAM ..... DATE: .....

0 —— 1"
BAR MEASURES ONE INCH ON ORIGINAL DRAWINGS

DESIGNED BY F. POSTLEWAITE
CHECKED BY D. TURNER
DRAWN BY J. SCHULZ
DATE 10/2011

KALAMA FALLS HATCHERY
MODROW TRAP MODIFICATIONS
MECHANICAL
SECTIONS – II

PROJECT NO. CZ:H28:11–1
SHEET 37 OF 63

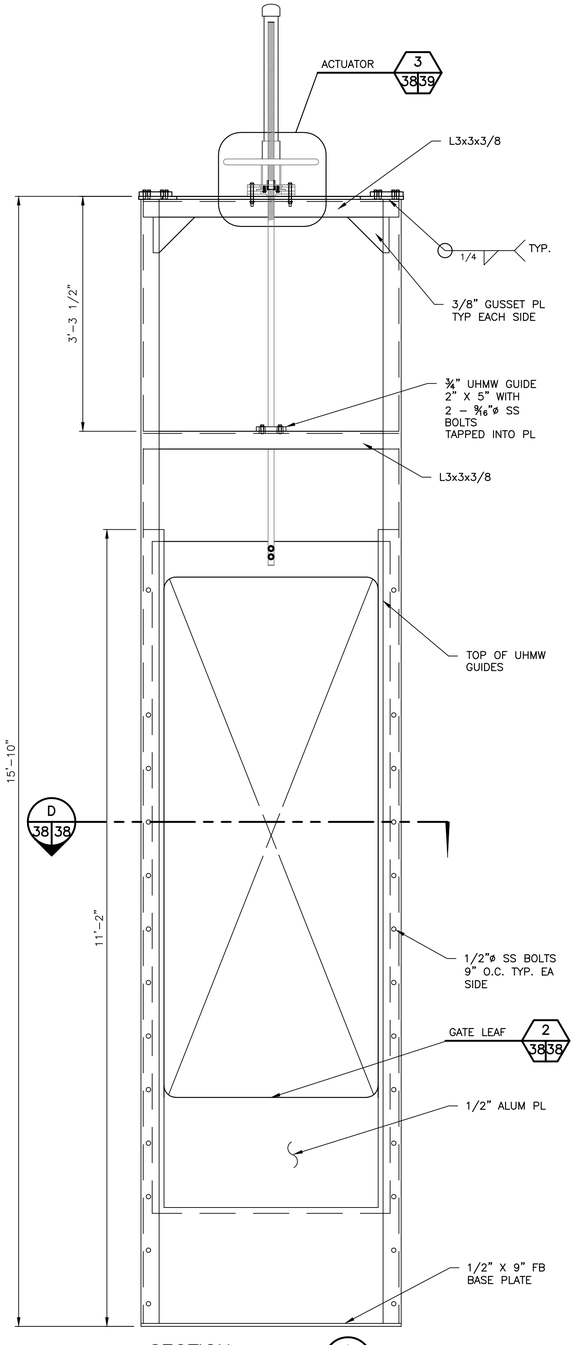

SECTION
SCALE: 1" = 1'-0"
A
38 38

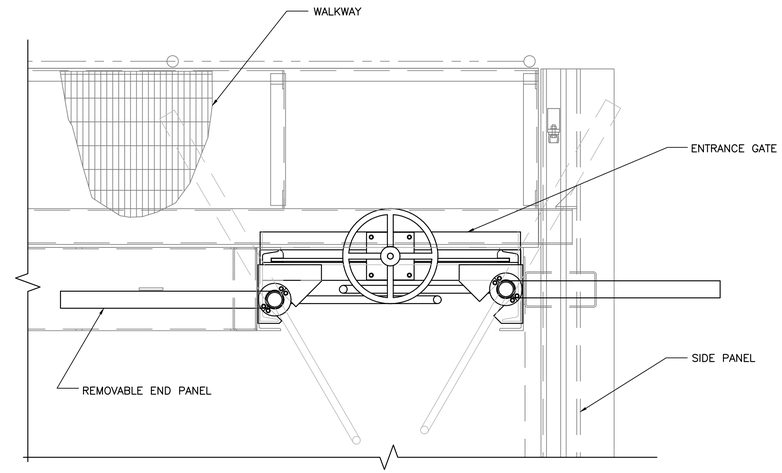

ENTRANCE GATE INSTALLED

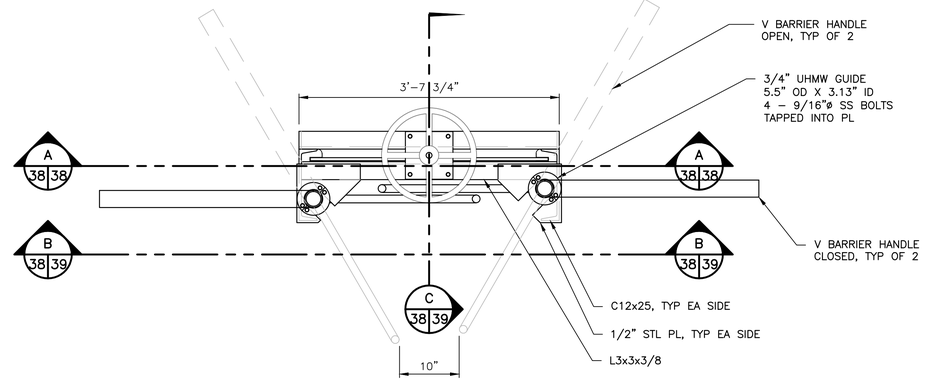

PLAN

ENTRANCE GATE
SCALE: 1" = 1'-0"
1
35 38
1
22 38

NOTES:

1. UNLESS NOTED OTHERWISE, COMPONENTS OF THE ENTRANCE GATE SHALL BE COATED MILD STEEL AS FOLLOWS.
2. STEEL PLATES AND SHAPES SHALL BE ASTM A36/ 36M.
3. STEEL PIPE SHALL BE ASTM A53/ 53M, TYPE E OR S, GRADE B
4. STEEL HSS TUBES SHALL BE ASTM A500 GRADE B
5. ALL MILD STEEL COMPONENTS SHALL SHALL BE COATED PER SPECIFICATION SECTION 09900 FOR SUBMERGED SERVICE.

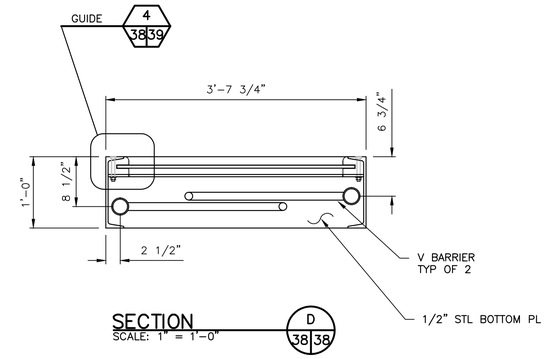

SECTION
SCALE: 1" = 1'-0"
D
38 38

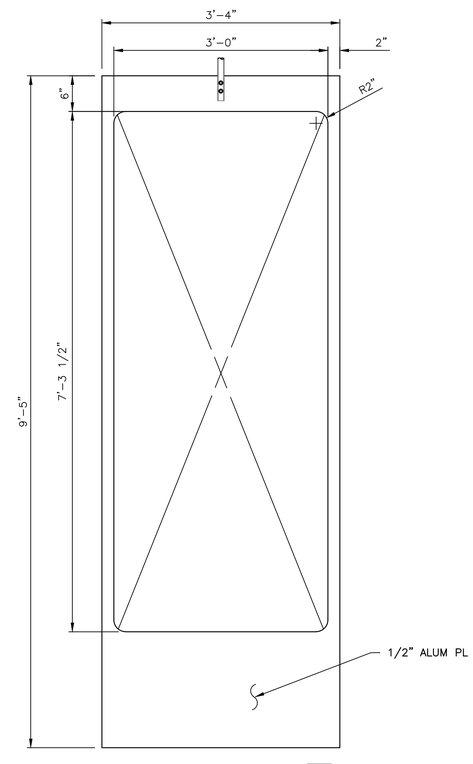

GATE LEAF
SCALE: 1" = 1'-0"
2
38 38

Resource Consultants, Inc.
REDMOND, WA.

WASHINGTON STATE
DEPARTMENT OF FISH AND WILDLIFE

SYM	DATE	REVISION DESCRIPTION	BY

APPROVED AND RELEASED FOR CONSTRUCTION

CHIEF ENGINEER ..... DATE: .....
PROGRAM ..... DATE: .....

0 ——— 1"
BAR MEASURES ONE INCH ON ORIGINAL DRAWINGS

DESIGNED BY F. POSTLEWAITE
CHECKED BY D. TURNER
DRAWN BY B. GOCHENOUR
DATE 10/2011

KALAMA FALLS HATCHERY
MODROW TRAP MODIFICATIONS
MECHANICAL
ENTRANCE GATE DETAILS – I

PROJECT NO. CZ:H28:11–1
SHEET 38 OF 63

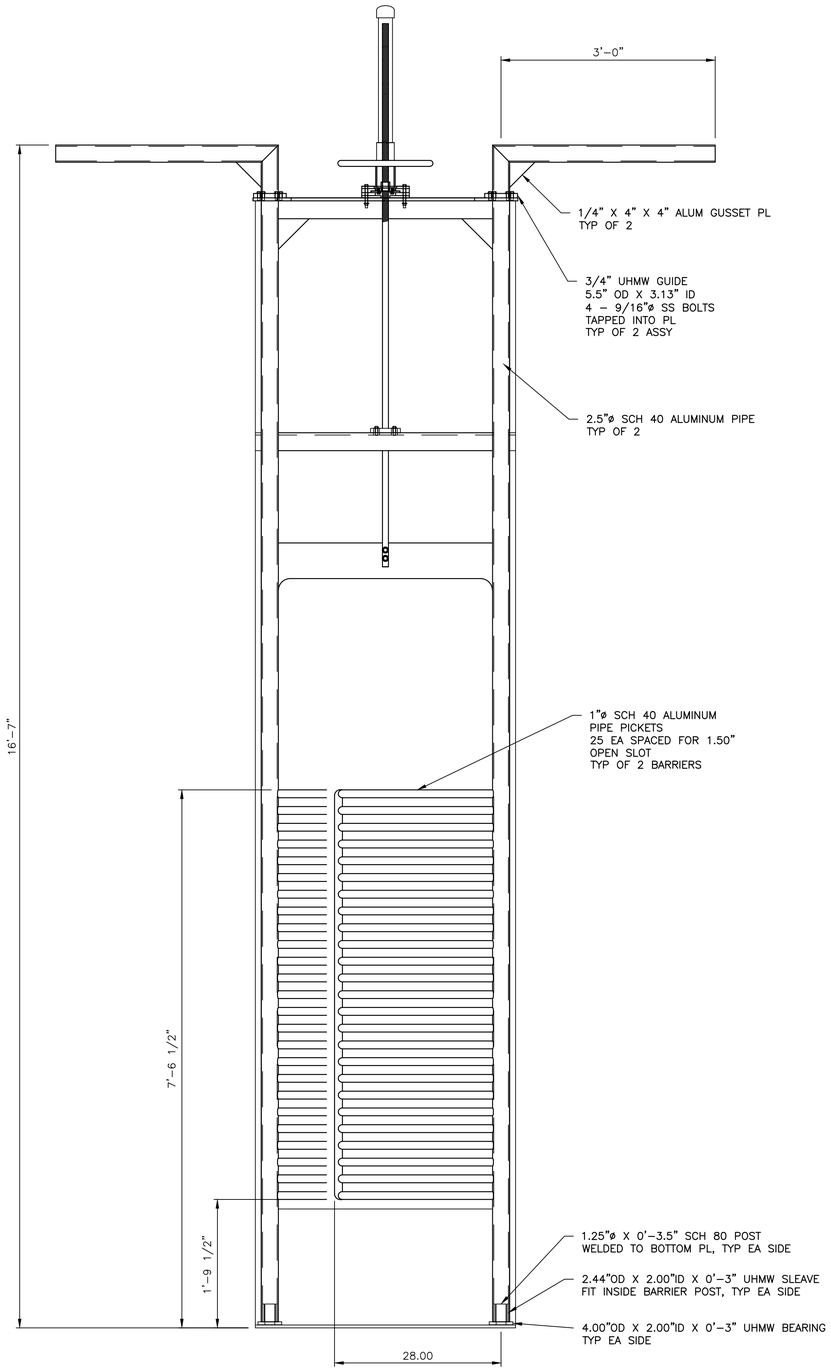

SECTION B 38/39
SCALE: 1" = 1'-0"

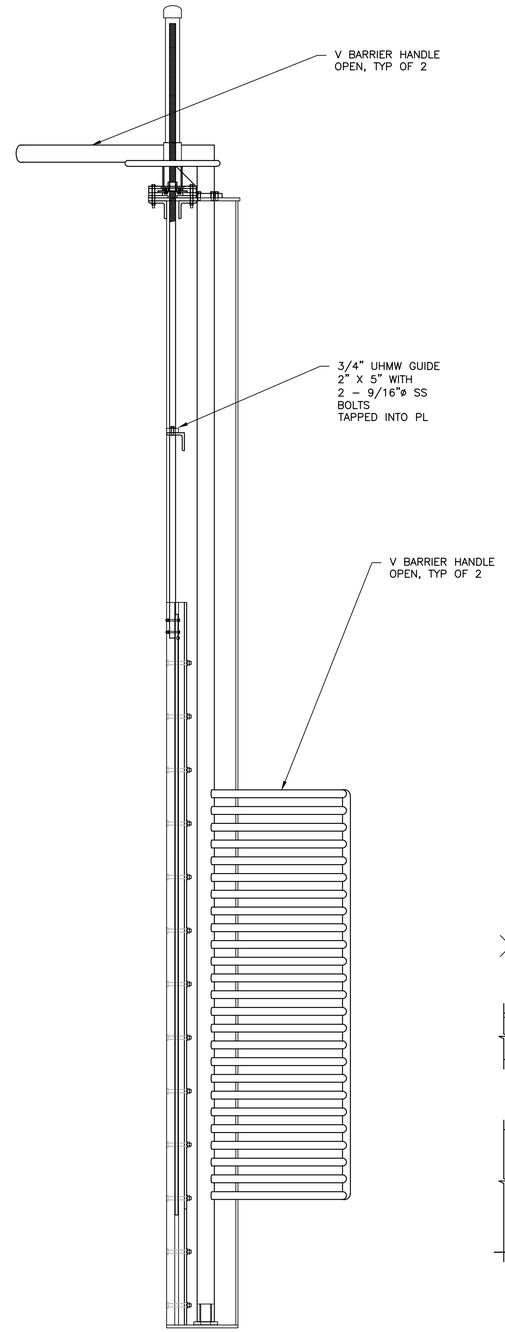

SECTION C 38/39
SCALE: 1" = 1'-0"

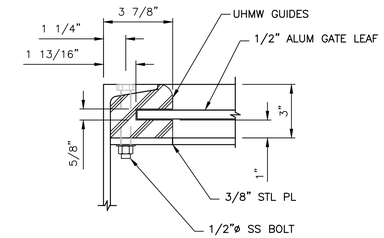

GUIDE 4 38/39
SCALE: 3" = 1'-0"

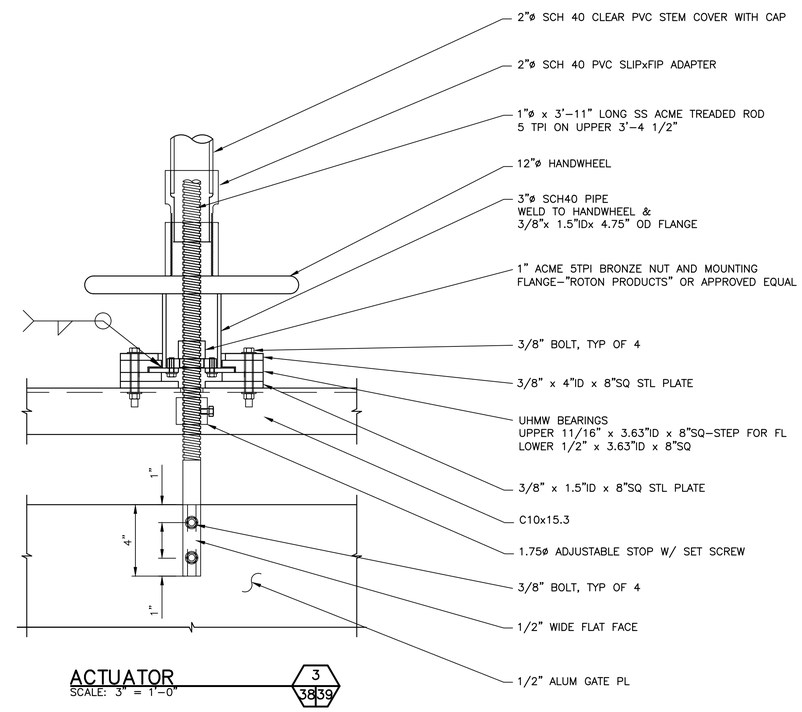

ACTUATOR 3 38/39
SCALE: 3" = 1'-0"

Resource Consultants, Inc.
REDMOND, WA.

WASHINGTON STATE
DEPARTMENT OF FISH AND WILDLIFE

SYM	DATE	REVISION DESCRIPTION	BY

APPROVED AND RELEASED FOR CONSTRUCTION

CHIEF ENGINEER ..... DATE: .....
PROGRAM ..... DATE: .....

0 — 1"
BAR MEASURES ONE INCH ON ORIGINAL DRAWINGS

DESIGNED BY F. POSTLEWAITE
CHECKED BY D. TURNER
DRAWN BY B. GOCHENOUR
DATE 10/2011

KALAMA FALLS HATCHERY

MODROW TRAP MODIFICATIONS
MECHANICAL
ENTRANCE GATE DETAILS - II

PROJECT NO. CZ:H28:11-1

SHEET 39 OF 63

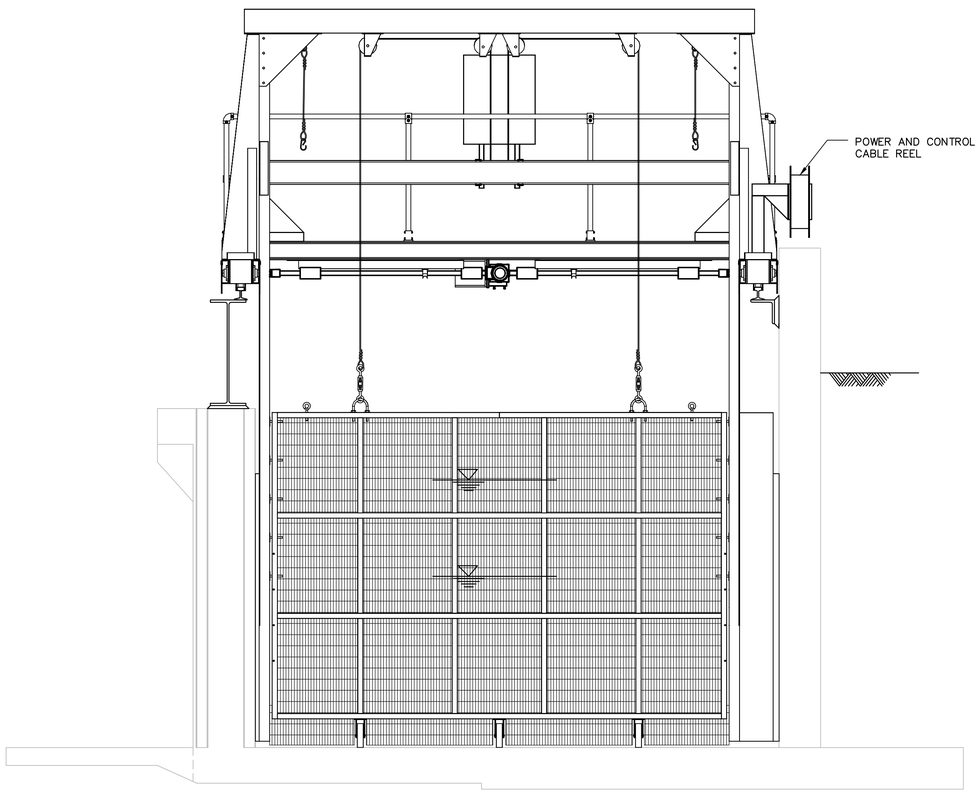

FRONT VIEW

HOLDING POOL CROWDER (1 / 36 40)
SCALE: 1/2" = 1'-0"

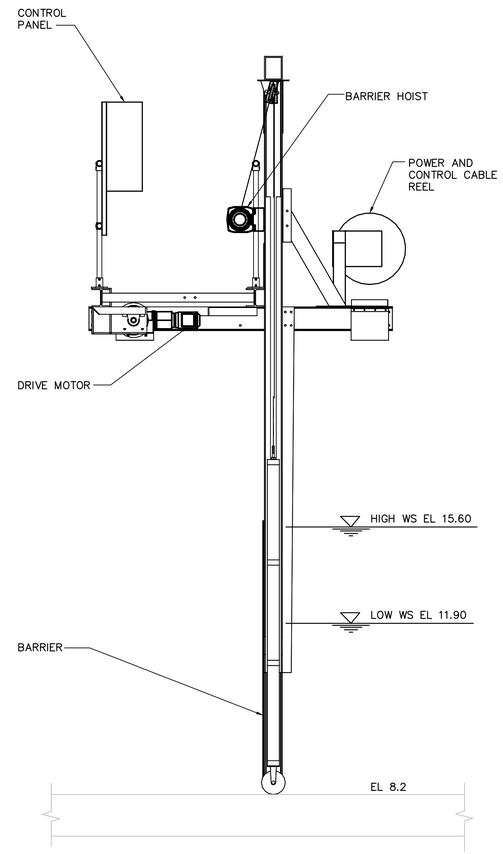

SIDE VIEW

HOLDING POOL CROWDER (2 / 37 40)
SCALE: 1/2" = 1'-0"

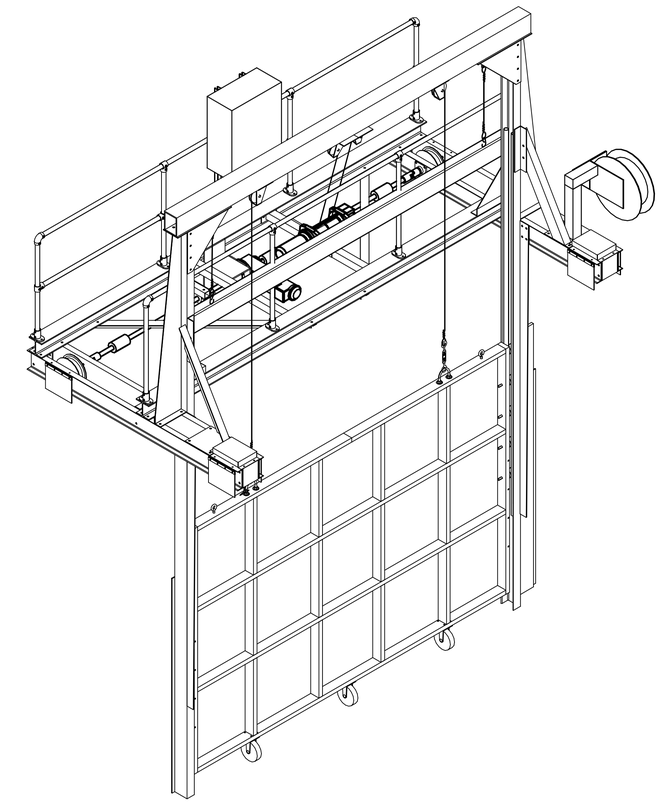

ISOMETRIC VIEW

NOTES:

1. CROWDER TO BE FABRICATED, DELIVERED AND INSTALLED BY WDFW.
2. CONTRACTOR SHALL COORDINATE ELECTRICAL CONNECTION AND VERIFY RAIL ALIGNMENT.

Resource Consultants, Inc.
REDMOND, WA.

WASHINGTON STATE
DEPARTMENT OF FISH AND WILDLIFE

SYM	DATE	REVISION DESCRIPTION	BY

APPROVED AND RELEASED FOR CONSTRUCTION
CHIEF ENGINEER ..... DATE: .....
PROGRAM ..... DATE: .....

0 — 1"
BAR MEASURES ONE INCH ON ORIGINAL DRAWINGS

DESIGNED BY F. POSTLEWAITE
CHECKED BY D. TURNER
DRAWN BY J. SCHULZ
DATE 10/2011

KALAMA FALLS HATCHERY
MODROW TRAP MODIFICATIONS
MECHANICAL
HOLDING POOL CROWDER

PROJECT NO. CZ:H28:11-1
SHEET 40 OF 63

CROWDER ASSEMBLIES			
PART #	QTY	PART DESCRIPTION	MATERIAL
BA	1	BED ASSEMBLY	
LS	1	LEAF SUPPORT ASSEMBLY	

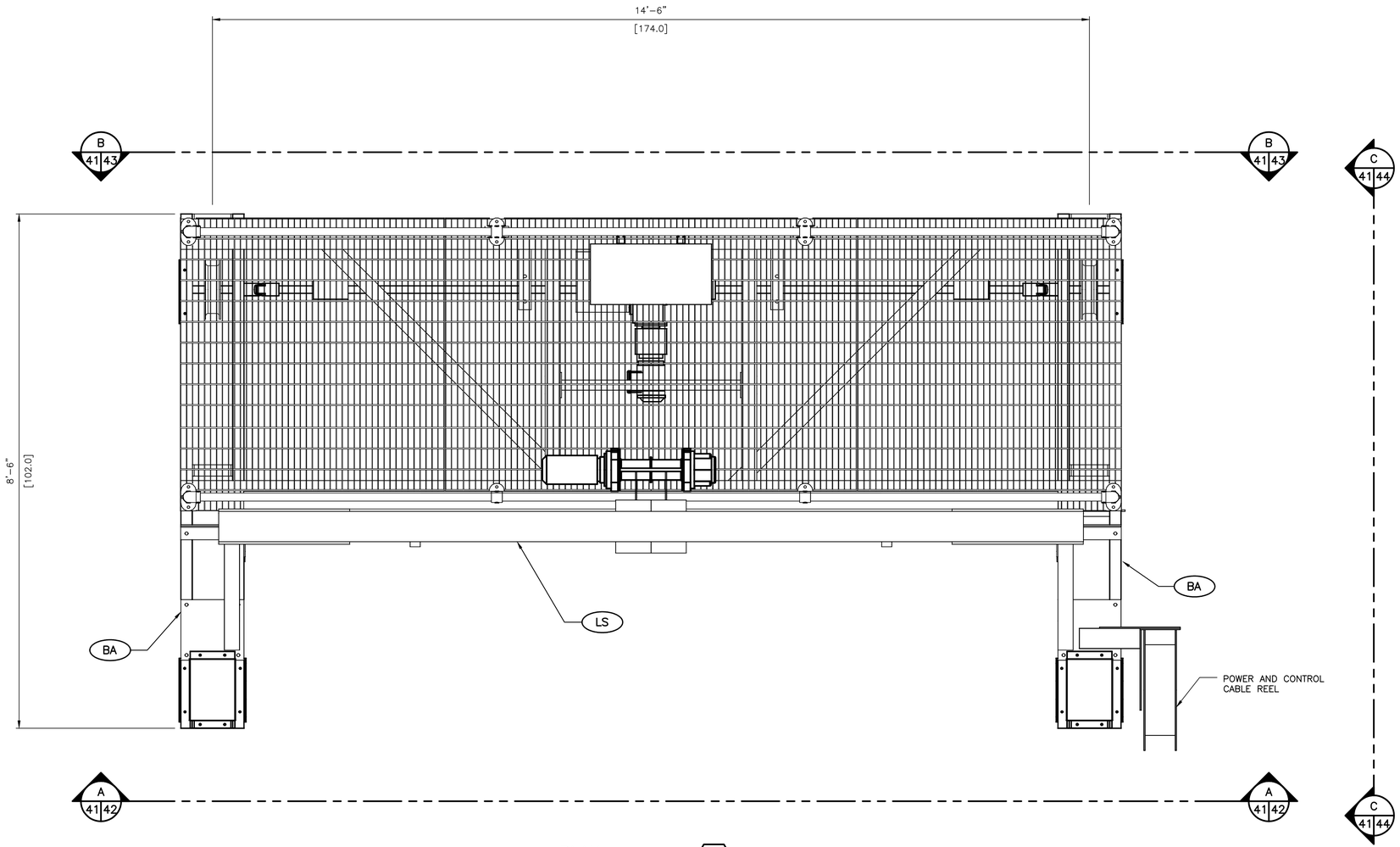

PLAN
SCALE: 1/2" = 1'-0"
2
35 41

NOTES:

1. CROWDER TO BE FABRICATED, DELIVERED AND INSTALLED BY WDFW.
2. CONTRACTOR SHALL COORDINATE ELECTRICAL CONNECTION AND VERIFY RAIL ALIGNMENT.

Resource Consultants, Inc.
REDMOND, WA.

WASHINGTON STATE
DEPARTMENT OF FISH AND WILDLIFE

SYM	DATE	REVISION DESCRIPTION	BY

APPROVED AND RELEASED FOR CONSTRUCTION
CHIEF ENGINEER ..... DATE: .....
PROGRAM ..... DATE: .....

0 — 1"
BAR MEASURES ONE INCH ON ORIGINAL DRAWINGS

DESIGNED BY F. POSTLEWAITE
CHECKED BY D. TURNER
DRAWN BY J. SCHULZ
DATE 10/2011

KALAMA FALLS HATCHERY
MODROW TRAP MODIFICATIONS
MECHANICAL
HOLDING POOL CROWDER–PLAN

PROJECT NO. CZ:H28:11–1
SHEET 41 OF 63

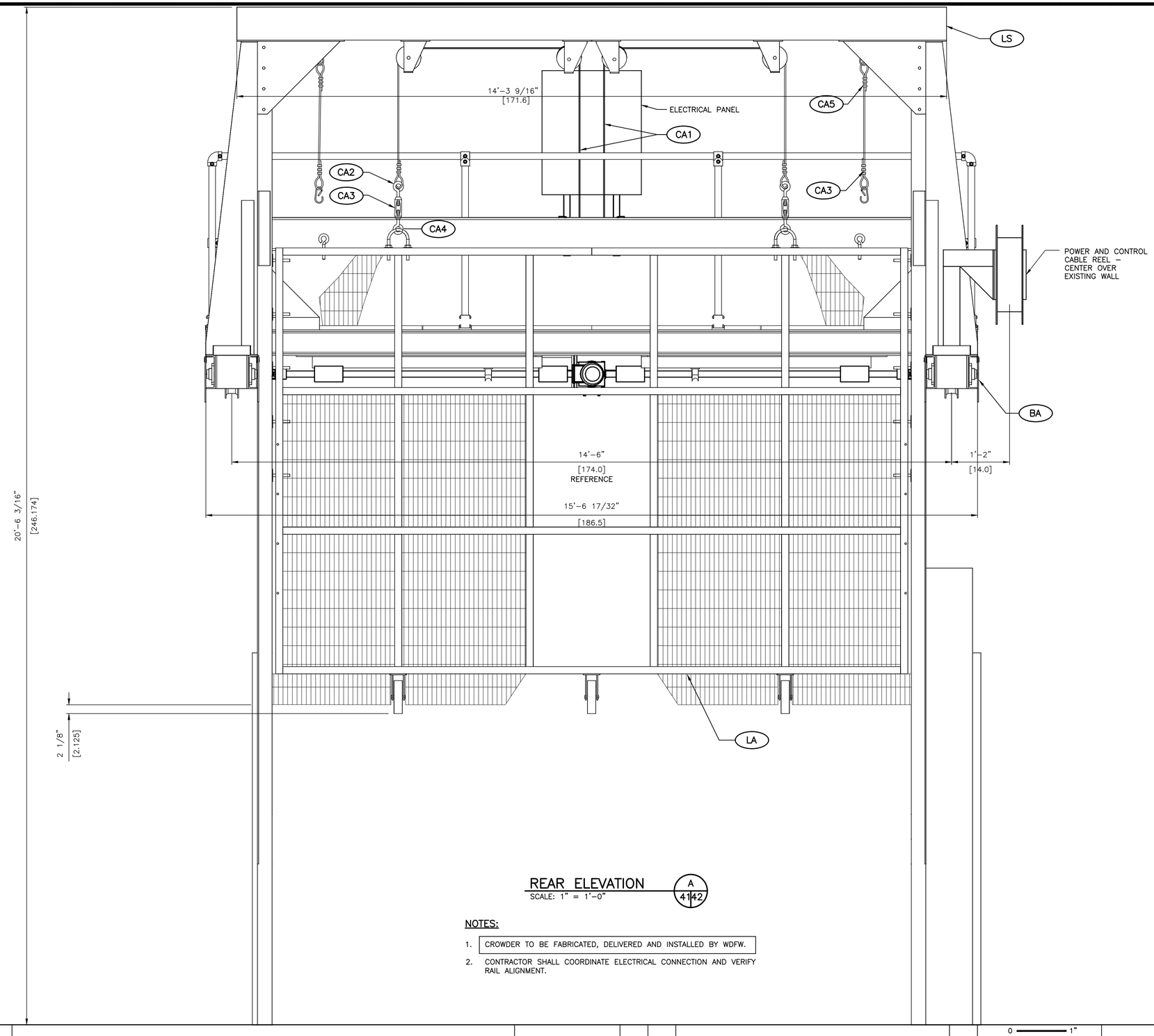

REAR ELEVATION

SCALE: 1" = 1'-0"

A 41 42

NOTES:

1. CROWDER TO BE FABRICATED, DELIVERED AND INSTALLED BY WDFW.
2. CONTRACTOR SHALL COORDINATE ELECTRICAL CONNECTION AND VERIFY RAIL ALIGNMENT.

CROWDER ASSEMBLIES

PART #	QTY	PART DESCRIPTION	MATERIAL
LA	1	LEAF ASSEMBLY	
BA	1	BED ASSEMBLY	
LS	1	LEAF SUPPORT ASSEMBLY	
CA1	1	CABLE	5/16"ø STAINLESS STEEL
CA2	18	CLAMP	TRIPLE CLAMP LOOPED ENDS
CA3	6	FERRULE CRIMP	ALUMINUM FERRULE CRIMP
CA4	2	TURNBUCKLE	ADJUSTABLE TURNBUCKLE
CA5	4	CLEVIS	3/8" ALLOY STEEL W/LATCH

Resource Consultants, Inc.
REDMOND, WA.

WASHINGTON STATE
DEPARTMENT OF FISH AND WILDLIFE

SYM	DATE	REVISION DESCRIPTION	BY

APPROVED AND RELEASED FOR CONSTRUCTION

CHIEF ENGINEER ..... DATE: .....
PROGRAM ..... DATE: .....

0 — 1"
BAR MEASURES ONE INCH ON ORIGINAL DRAWINGS

DESIGNED BY F. POSTLEWAITE
CHECKED BY D. TURNER
DRAWN BY J. SCHULZ
DATE 10/2011

KALAMA TRAP MODIFICATIONS

MODROW TRAP MODIFICATIONS
MECHANICAL
HOLDING POOL CROWDER–REAR ELEVATION

PROJECT NO. CZ:H28:11–1

SHEET 42 OF 63

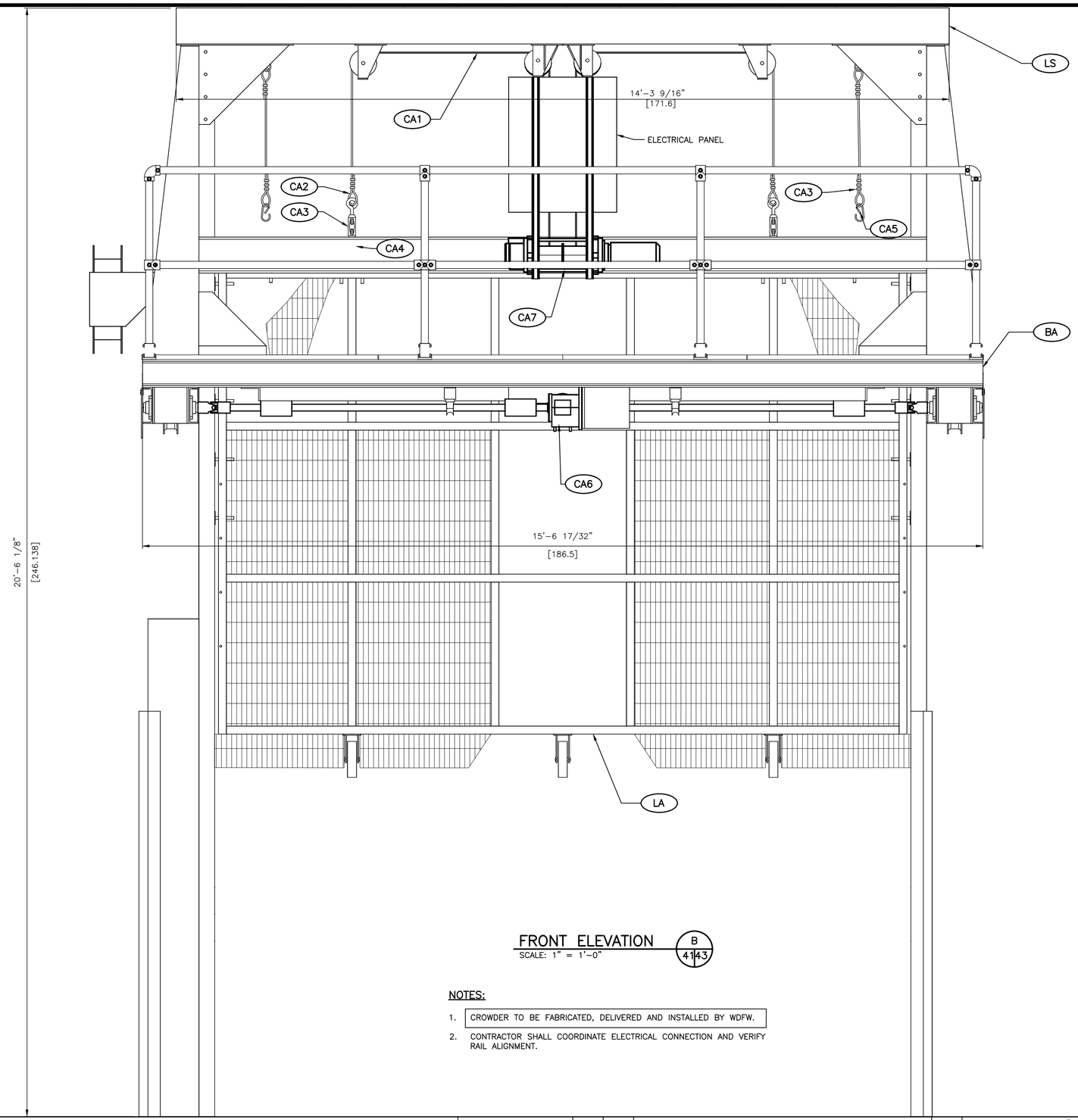

FRONT ELEVATION

SCALE: 1" = 1'-0"

B 41|43

CROWDER ASSEMBLIES			
PART #	QTY	PART DESCRIPTION	MATERIAL
LA	1	LEAF ASSEMBLY	
BA	1	BED ASSEMBLY	
LS	1	LEAF SUPPORT ASSEMBLY	
CA1	1	CABLE	
CA2	18	CLAMP	
CA3	6	FERRULE CRIMP	
CA4	2	TURNBUCKLE	
CA5	4	CLEVIS	
CA6	1	CROWDER DRIVE	SEW KAF57R37DR571 6.9 RPM, .075 HP
CA7	1	CROWDER HOIST	COLUMBIA WINCH HF2300 DRUM SIZE 02

NOTES:

1. CROWDER TO BE FABRICATED, DELIVERED AND INSTALLED BY WDFW.
2. CONTRACTOR SHALL COORDINATE ELECTRICAL CONNECTION AND VERIFY RAIL ALIGNMENT.

Resource Consultants, Inc.
REDMOND, WA.

WASHINGTON STATE
DEPARTMENT OF FISH AND WILDLIFE

SYM	DATE	REVISION DESCRIPTION	BY

APPROVED AND RELEASED FOR CONSTRUCTION

CHIEF ENGINEER ..... DATE: .....
PROGRAM ..... DATE: .....

0 —— 1"
BAR MEASURES ONE INCH ON ORIGINAL DRAWINGS

DESIGNED BY F. POSTLEWAITE
CHECKED BY D. TURNER
DRAWN BY J. SCHULZ
DATE 10/2011

KALAMA FALLS HATCHERY

MODROW TRAP MODIFICATIONS
MECHANICAL
HOLDING POOL CROWDER-FRONT ELEVATION

PROJECT NO. CZ:H28:11-1

SHEET 43 OF 63

CROWDER ASSEMBLIES			
PART #	QTY	PART DESCRIPTION	MATERIAL
LA	1	LEAF ASSEMBLY	
BA	1	BED ASSEMBLY	
LS	1	LEAF SUPPORT ASSEMBLY	
CA7	1	CROWDER HOIST	COLUMBIA WINCH HF2300 DRUM SIZE 02

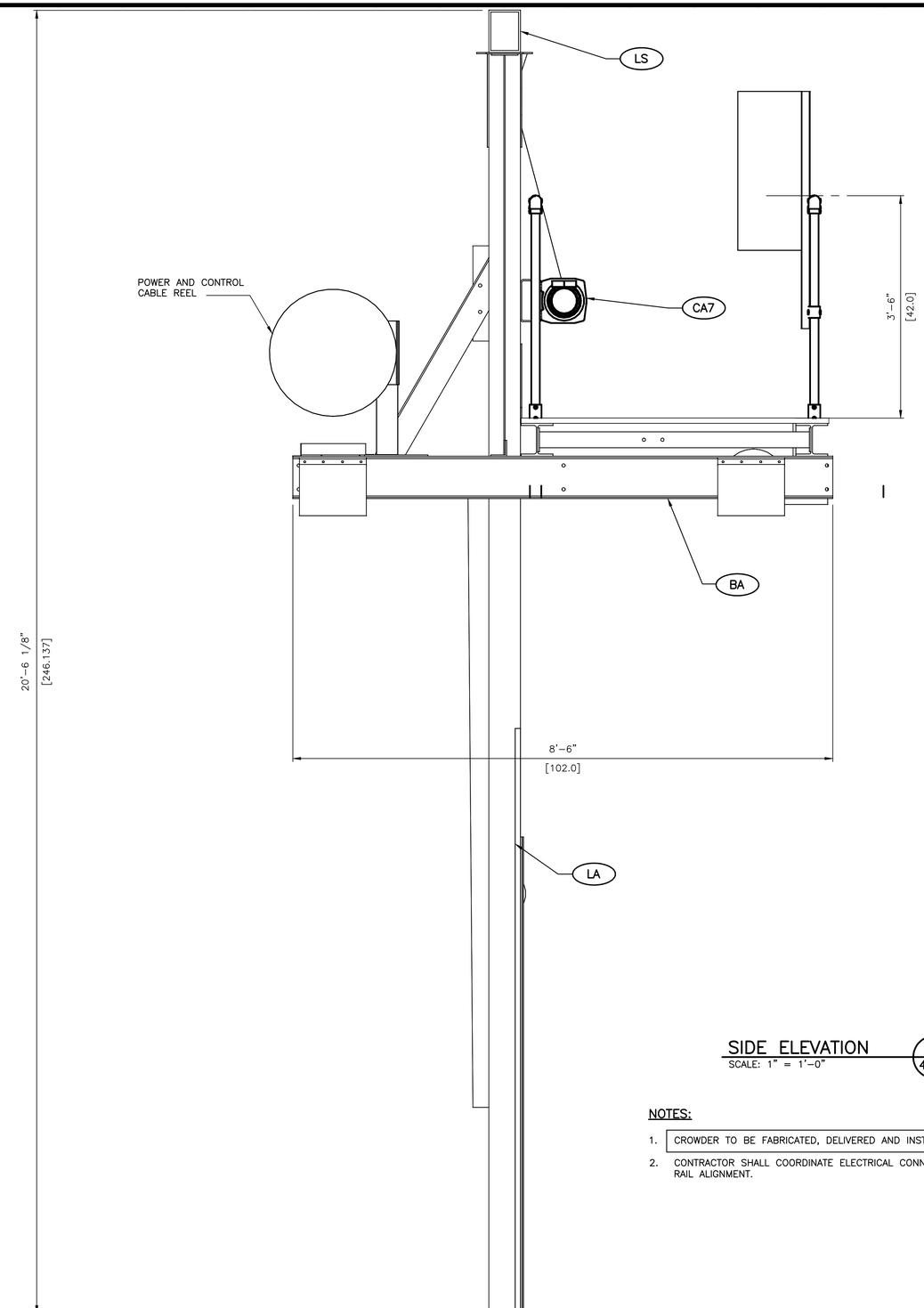

SIDE ELEVATION (C 41|44)
SCALE: 1" = 1'-0"

NOTES:

1. CROWDER TO BE FABRICATED, DELIVERED AND INSTALLED BY WDFW.
2. CONTRACTOR SHALL COORDINATE ELECTRICAL CONNECTION AND VERIFY RAIL ALIGNMENT.

Resource Consultants, Inc.
REDMOND, WA.

WASHINGTON STATE
DEPARTMENT OF FISH AND WILDLIFE

SYM	DATE	REVISION DESCRIPTION	BY

APPROVED AND RELEASED FOR CONSTRUCTION
CHIEF ENGINEER ..... DATE: .....
PROGRAM ..... DATE: .....

0 — 1"
BAR MEASURES ONE INCH ON ORIGINAL DRAWINGS

DESIGNED BY F. POSTLEWAITE
CHECKED BY D. TURNER
DRAWN BY J. SCHULZ
DATE 10/2011

KALAMA FALLS HATCHERY
MECHANICAL
END ELEVATION
HOLDING POOL CROWDER–END ELEVATION

PROJECT NO. CZ:H28:11–1
SHEET 44 OF 63

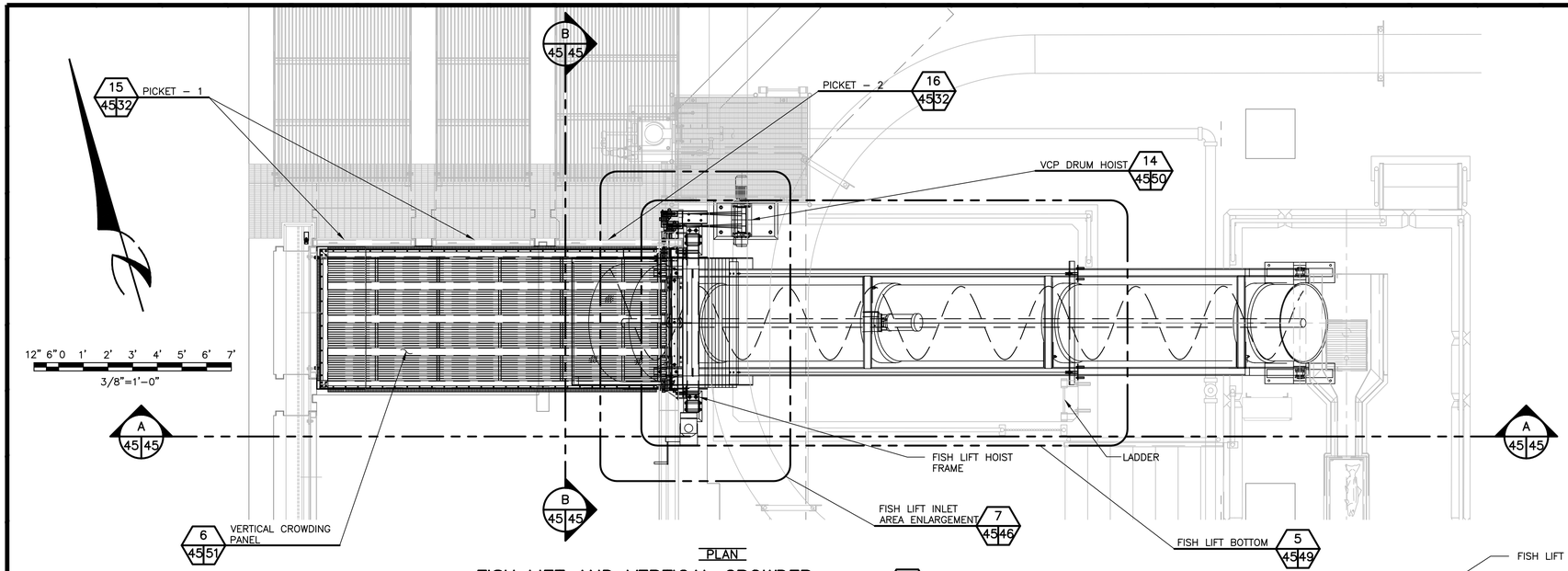

PLAN

FISH LIFT AND VERTICAL CROWDER 3 35 45

SCALE: 3/8" = 1'-0"

NOTES:

1. FISH LIFT SHALL BE MOUNTED ON A HINGE AT THE UPPER END AND ADJUSTABLE FROM AN INCLINATION OF 32° TO 36° FROM HORIZONTAL.
2. THE FISH LIFT SHALL BE LOCATED TO MATCH UP WITH THE HOLDING POOL STRUCTURE AND SORTING TABLE SEE 9 FOR COORDINATES.
3. FISH LIFT SHALL BE FABRICATED WITH AN ALUMINUM FRAME SUPPORTING AN ALUMINUM OR FRP TUBE AND FLIGHTS. SEE SPECIFICATION SECTION 11220.

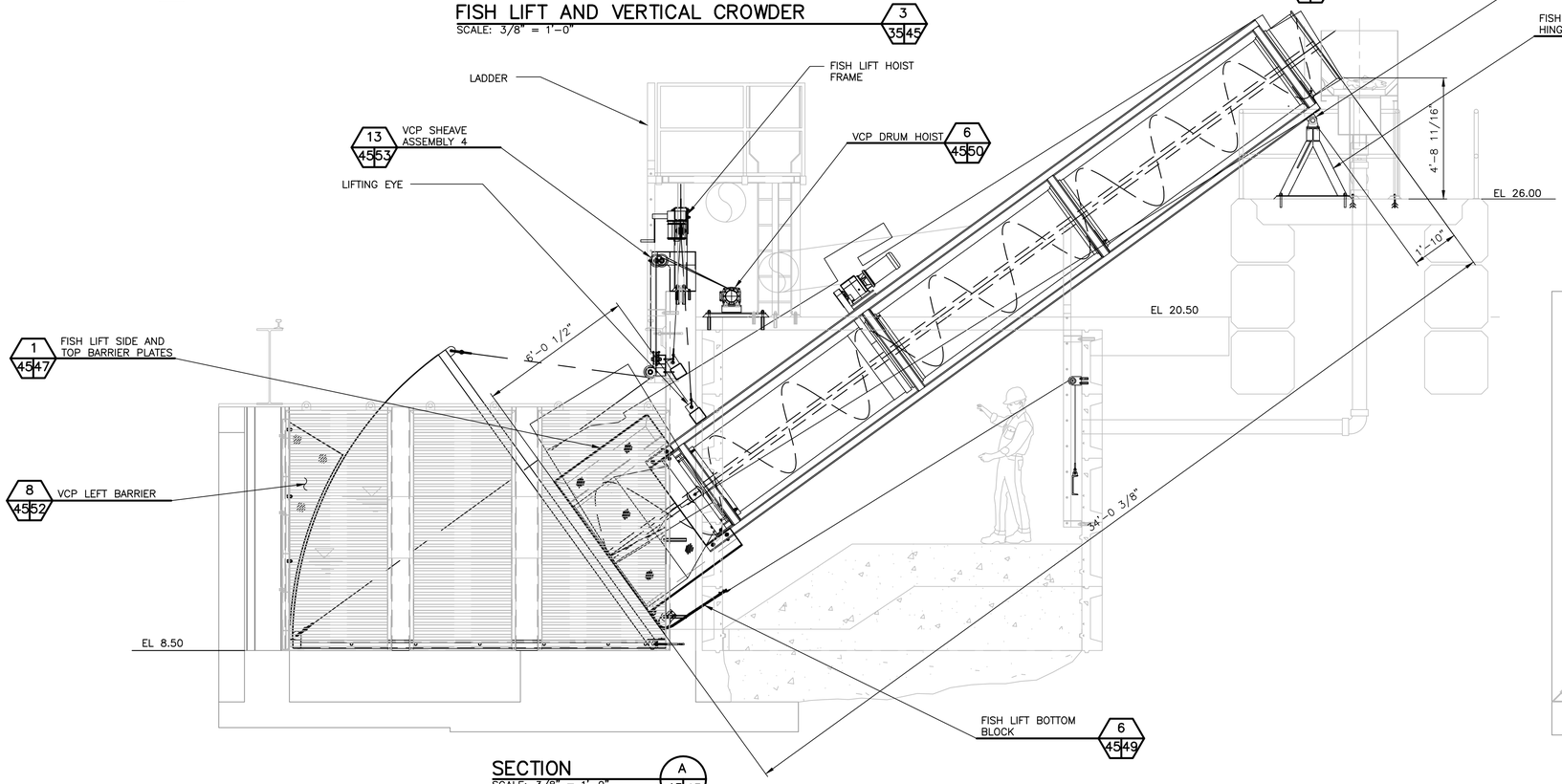

SECTION A 45 45

SCALE: 3/8" = 1'-0"

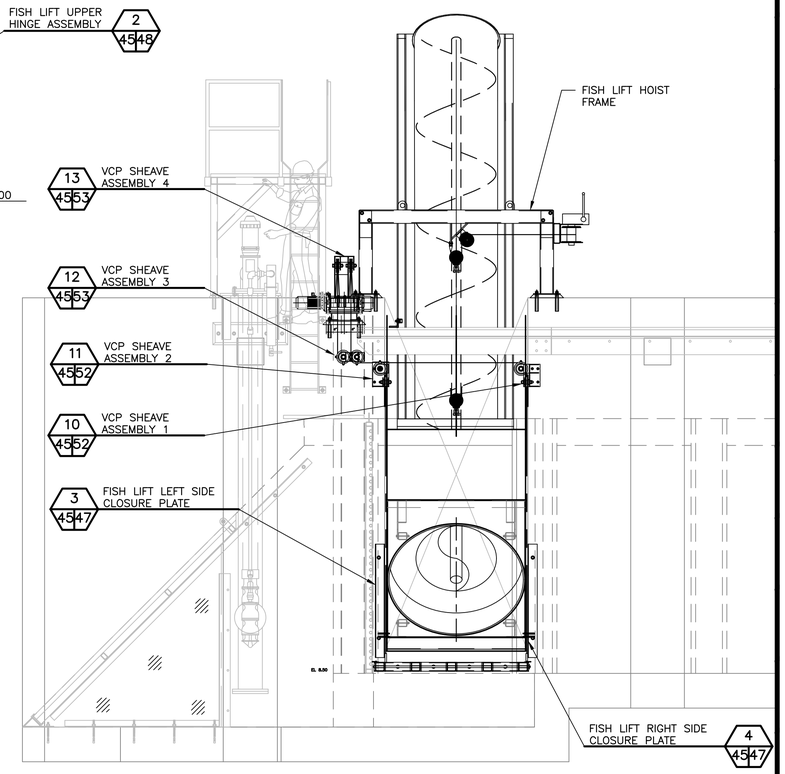

SECTION B 45 45 B 46 45

SCALE: 3/8" = 1'-0"

Resource Consultants, Inc.
REDMOND, WA.

WASHINGTON STATE
DEPARTMENT OF FISH AND WILDLIFE

SYM	DATE	REVISION DESCRIPTION	BY
		APPROVED AND RELEASED FOR CONSTRUCTION	

CHIEF ENGINEER ..... DATE: .....
PROGRAM ..... DATE: .....

0 — 1"
BAR MEASURES ONE INCH ON ORIGINAL DRAWINGS

DESIGNED BY F. POSTLEWAITE
CHECKED BY D. TURNER
DRAWN BY J. SCHULZ
DATE 10/2011

KALAMA FALLS HATCHERY

MODROW TRAP MODIFICATIONS

MECHANICAL

FISH LIFT AND VERTICAL CROWDER PANEL

PROJECT NO. CZ:H28:11-1

SHEET 45 OF 63

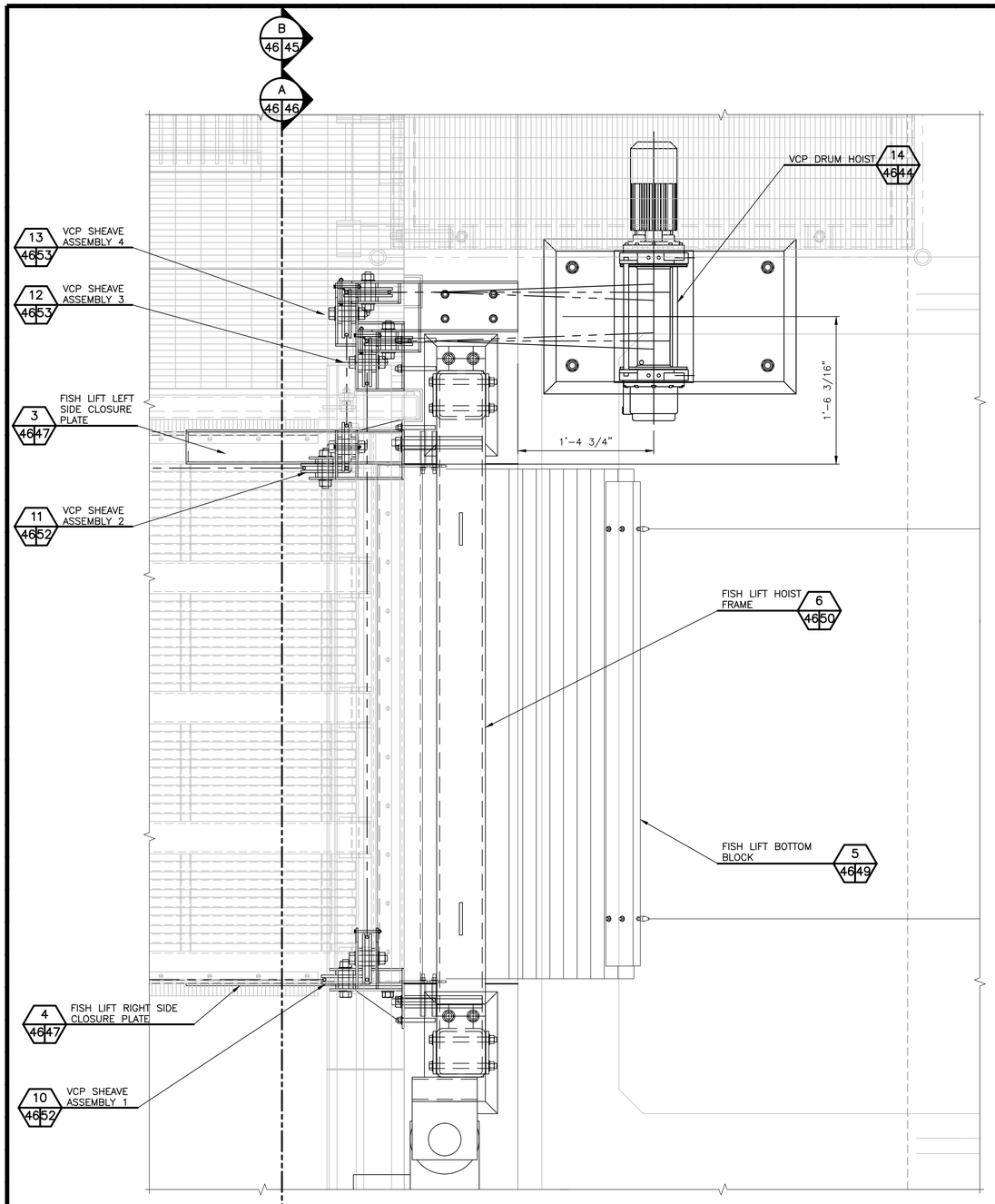

PLAN

DETAIL – FISH LIFT INLET AREA ENLARGEMENT 7 45 46 7 35 46

SCALE: 1-1/2" = 1'-0"

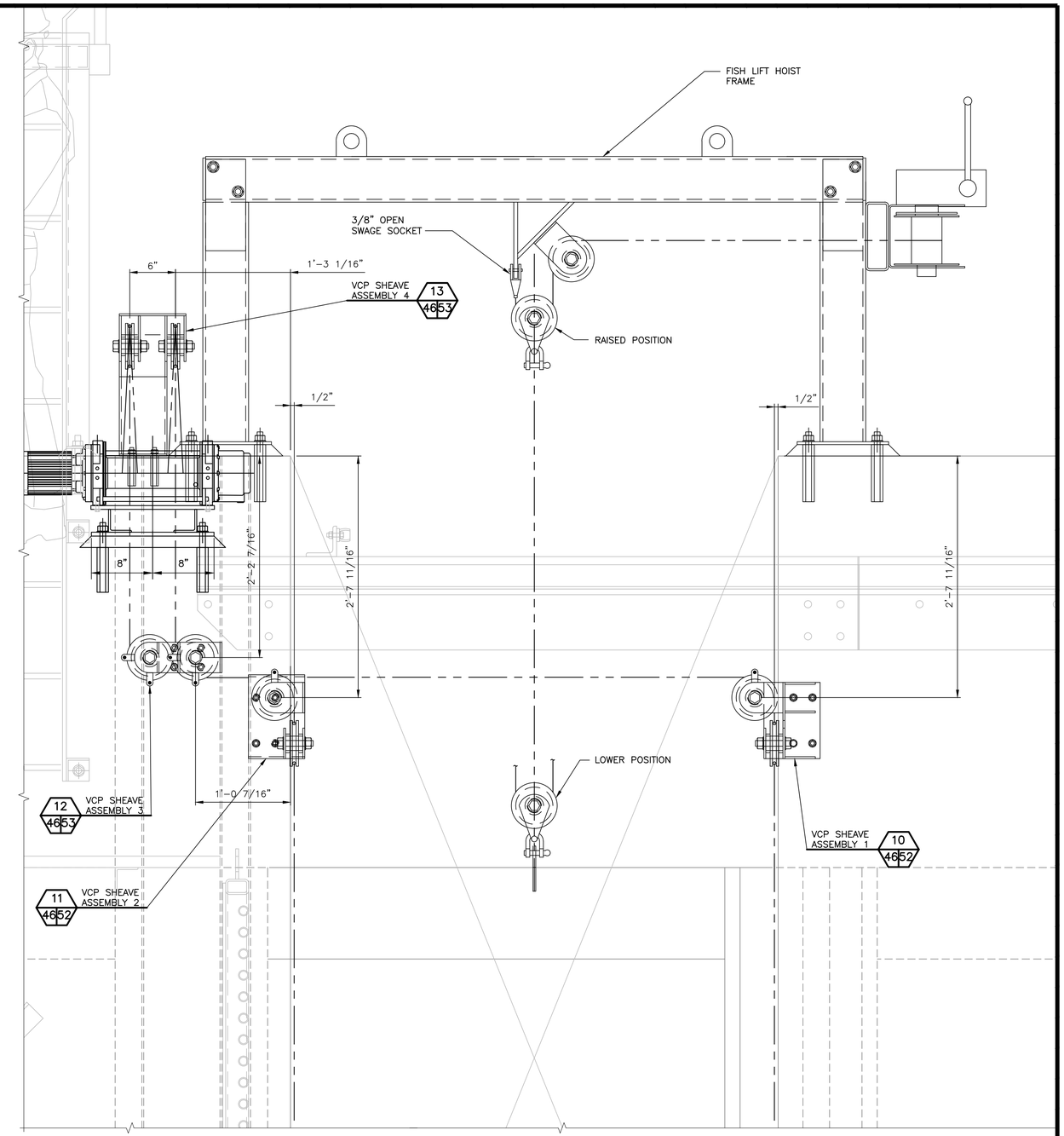

SECTION A 46 46

SCALE: 1-1/2" = 1'-0"

Resource Consultants, Inc.
REDMOND, WA.

WASHINGTON STATE
DEPARTMENT OF FISH AND WILDLIFE

SYM	DATE	REVISION DESCRIPTION	BY
		APPROVED AND RELEASED FOR CONSTRUCTION	

CHIEF ENGINEER ..... DATE: .....
PROGRAM ..... DATE: .....

0 ——— 1"
BAR MEASURES ONE INCH ON ORIGINAL DRAWINGS

DESIGNED BY F. POSTLEWAITE
CHECKED BY D. TURNER
DRAWN BY J. SCHULZ
DATE 10/2011

KALAMA FALLS HATCHERY

MODROW TRAP MODIFICATIONS

MECHANICAL

FISH LIFT ENLARGEMENT AND HINGE ASS'Y

PROJECT NO. CZ:H28:11-1

SHEET 46 OF 63

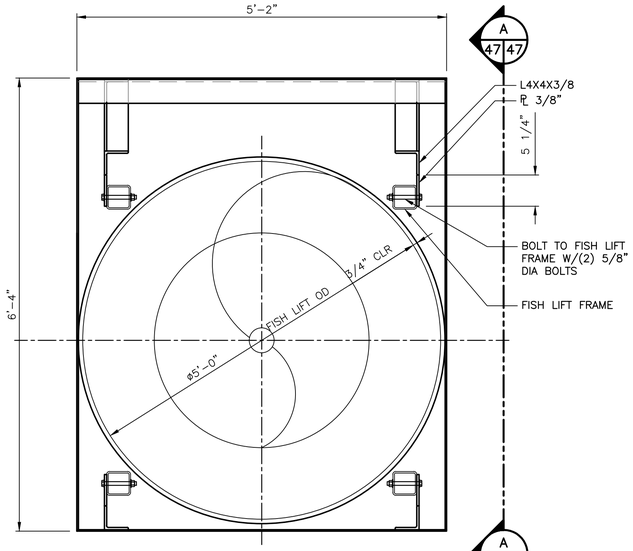

ENTRANCE

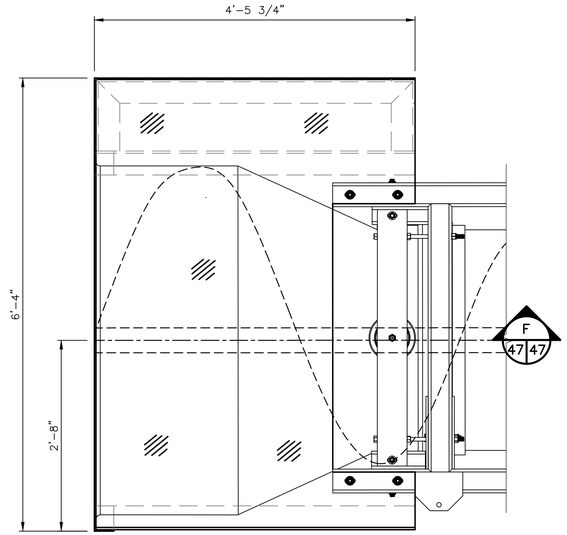

SECTION A 47 47
SCALE: 1" = 1'-0"

DETAIL – FISH LIFT SIDE AND TOP BARRIER PLATES 1 45 47
SCALE: 1" = 1'-0"

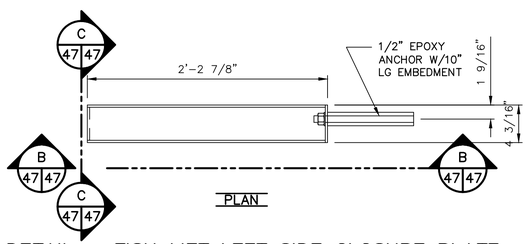

PLAN

DETAIL – FISH LIFT LEFT SIDE CLOSURE PLATE 3 45 47 3 46 47
SCALE: 1-1/2" = 1'-0"

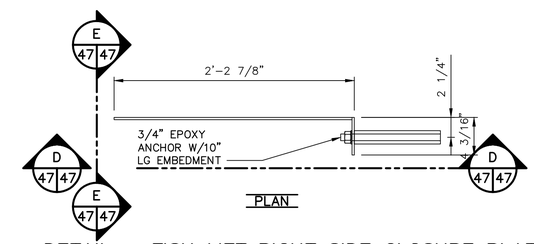

PLAN

DETAIL – FISH LIFT RIGHT SIDE CLOSURE PLATE 4 45 47 4 46 47
SCALE: 1-1/2" = 1'-0"

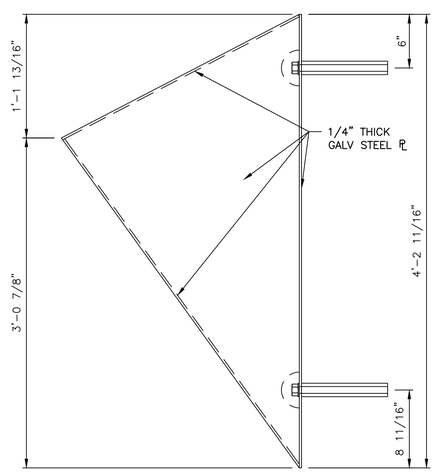

SECTION B 47 47
SCALE: 1-1/2" = 1'-0"

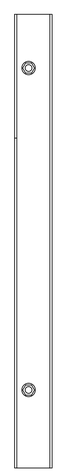

SECTION C 47 47
SCALE: 1-1/2" = 1'-0"

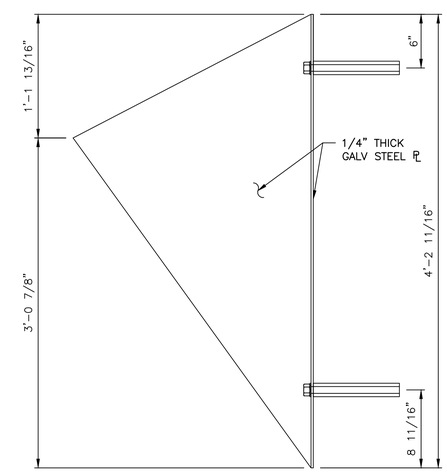

SECTION D 47 47
SCALE: 1-1/2" = 1'-0"

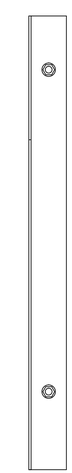

SECTION E 47 47
SCALE: 1-1/2" = 1'-0"

Resource Consultants, Inc.
REDMOND, WA.

WASHINGTON STATE
DEPARTMENT OF FISH AND WILDLIFE

SYM	DATE	REVISION DESCRIPTION	BY

APPROVED AND RELEASED FOR CONSTRUCTION

CHIEF ENGINEER ..... DATE: .....
PROGRAM ..... DATE: .....

0 — 1"
BAR MEASURES ONE INCH ON ORIGINAL DRAWINGS

DESIGNED BY F. POSTLEWAITE
CHECKED BY D. TURNER
DRAWN BY J. SCHULZ
DATE 10/2011

KALAMA FALLS HATCHERY

MODROW TRAP MODIFICATIONS

MECHANICAL

FISH LIFT AND VCP DETAILS – I

PROJECT NO. CZ:H28:11-1

SHEET 47 OF 63

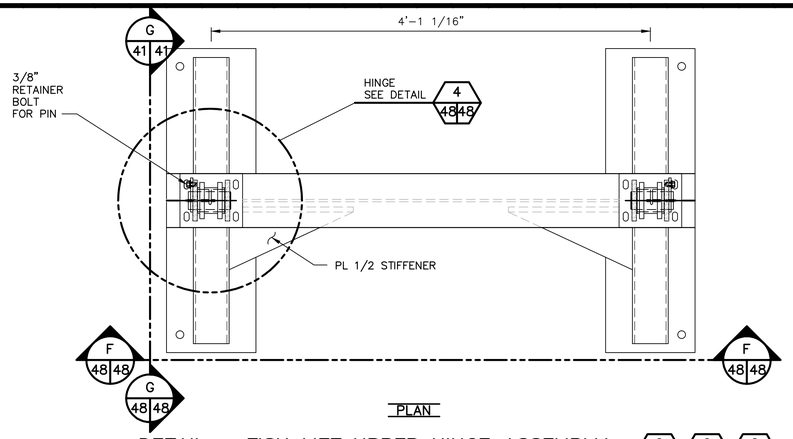

DETAIL – FISH LIFT UPPER HINGE ASSEMBLY 2 35 48 2 45 48 2 54 48
SCALE: 1-1/2" = 1'-0"

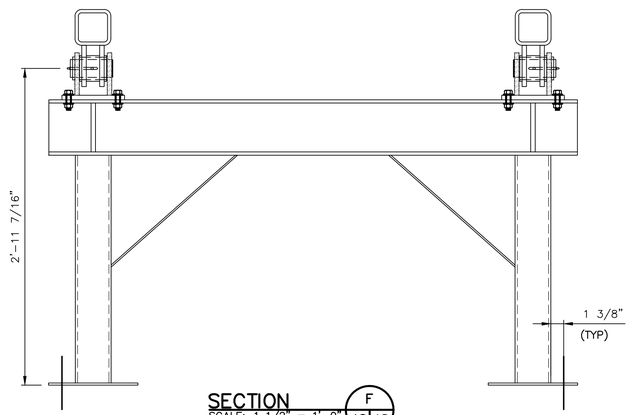

SECTION F 48 48
SCALE: 1 1/2" = 1'-0"

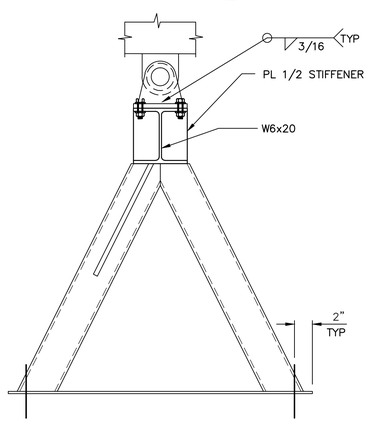

SECTION G 48 48
SCALE: 1-1/2" = 1'-0"

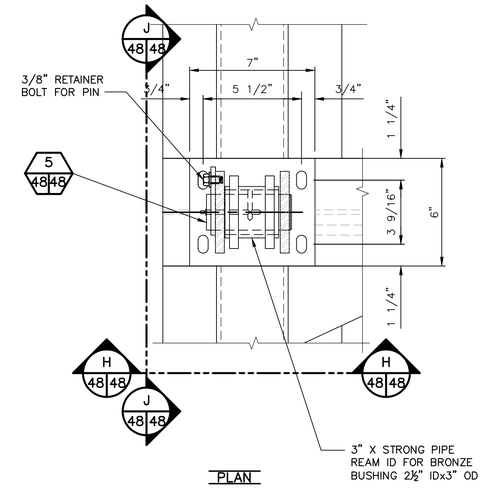

DETAIL – HINGE 4 48 48
SCALE: 3" = 1'-0"

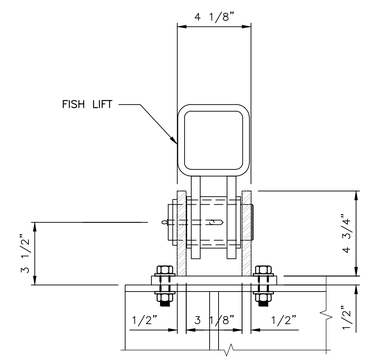

SECTION H 48 48
SCALE: 3" = 1'-0"

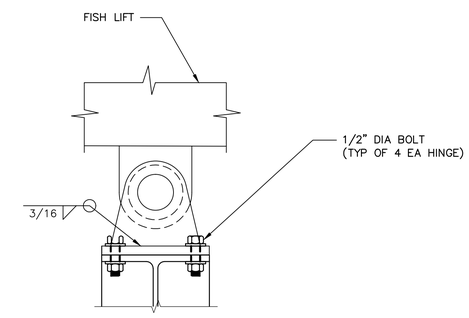

SECTION J 48 48
SCALE: 3" = 1'-0"

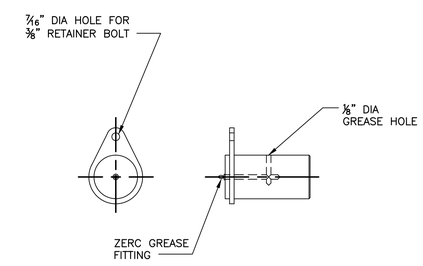

DETAIL – PIN 5 48 48
SCALE: 3" = 1'-0"

Resource Consultants, Inc.
REDMOND, WA.

WASHINGTON STATE
DEPARTMENT OF FISH AND WILDLIFE

SYM	DATE	REVISION DESCRIPTION	BY
		APPROVED AND RELEASED FOR CONSTRUCTION	

CHIEF ENGINEER ..... DATE: .....
PROGRAM ..... DATE: .....

0 —— 1"
BAR MEASURES ONE INCH ON ORIGINAL DRAWINGS

DESIGNED BY F. POSTLEWAITE
CHECKED BY D. TURNER
DRAWN BY J. SCHULZ
DATE 10/2011

KALAMA FALLS HATCHERY
MODROW TRAP MODIFICATIONS
MECHANICAL
FISH LIFT AND VCP DETAILS – II

PROJECT NO. CZ:H28:11-1
SHEET 48 OF 63

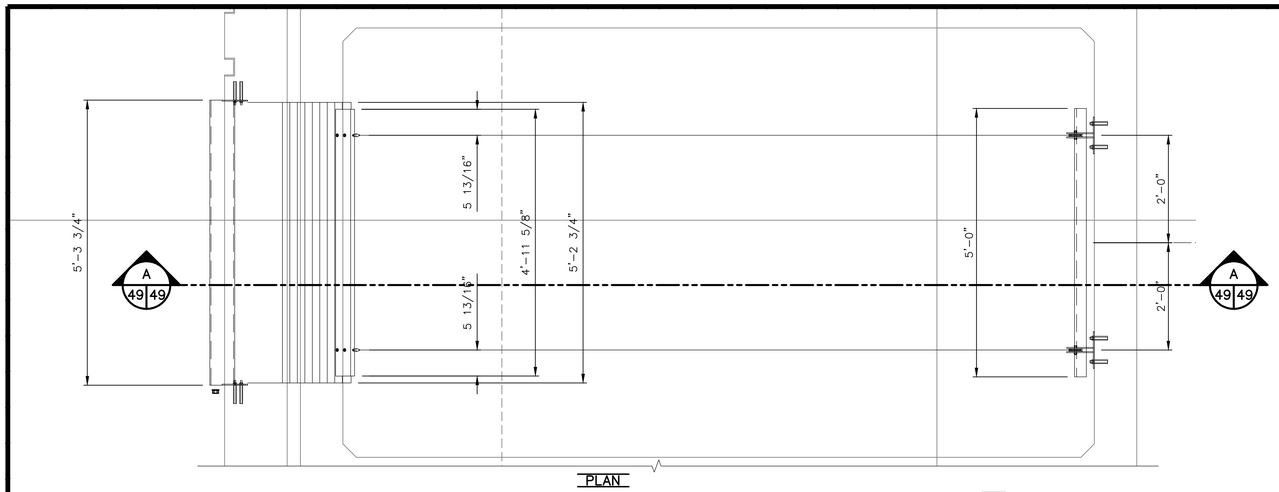

DETAIL – FISH LIFT BOTTOM BLOCK, PIPE GUIDE, AND SHEAVES (5 / 45 49)
SCALE: 3/4" = 1'-0"

NOTES:

1. BARRIER SHALL BE PLASTIC BELT MATERIAL: "INTRALOX SERIES 800 ACETAL, SEAM FREE, OPEN HINGE TOP, BLUE WITH POLYETHYLENE RODS".
2. COUNTER WEIGHT SHEAVE: 3" DIA NYLON "McMASTER-CARR #9466173 OR APPROVED EQUAL.

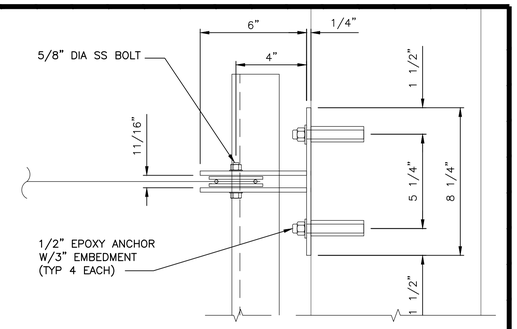

SECTION (B / 49 49)
SCALE: 3" = 1'-0"

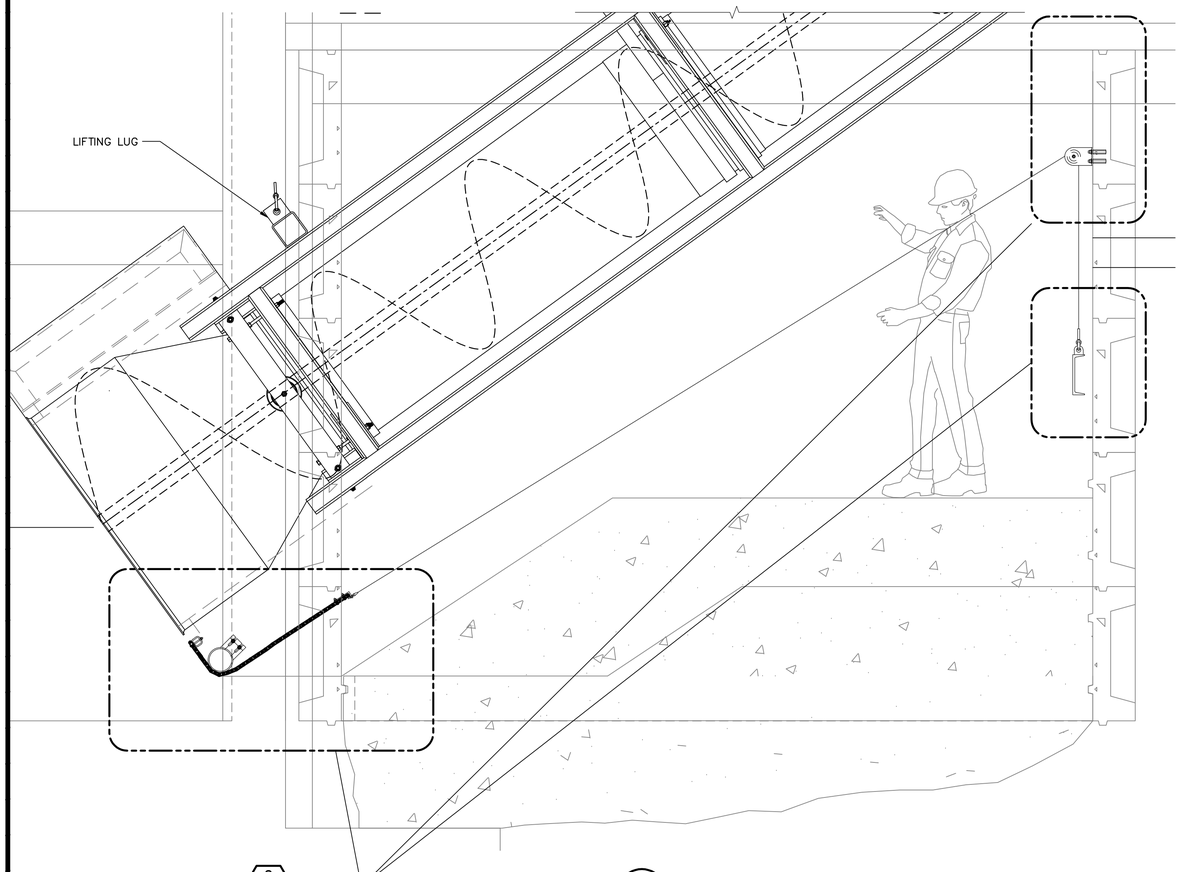

2 / 49 49

SECTION (A / 49 49)
SCALE: 3/4" = 1'-0"

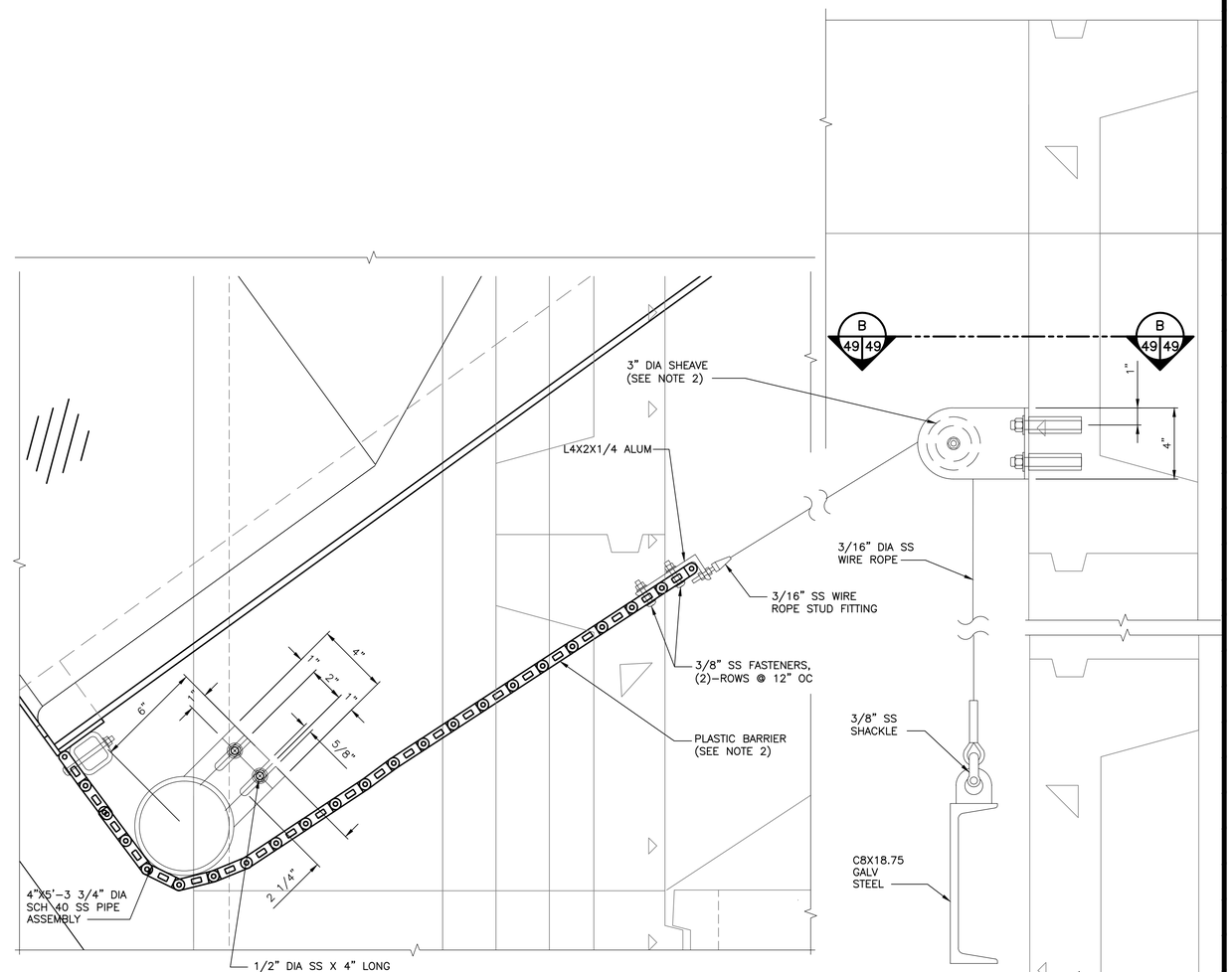

DETAIL – ENLARGED FISH LIFT BOTTOM BLOCK (2 / 49 49) (6 / 45 49)
SCALE: 3" = 1'-0"

Resource Consultants, Inc.
REDMOND, WA.

WASHINGTON STATE
DEPARTMENT OF FISH AND WILDLIFE

SYM	DATE	REVISION DESCRIPTION	BY
		APPROVED AND RELEASED FOR CONSTRUCTION	

CHIEF ENGINEER ..... DATE: .....
PROGRAM ..... DATE: .....

0 —— 1"
BAR MEASURES ONE INCH ON ORIGINAL DRAWINGS

DESIGNED BY F. POSTLEWAITE
CHECKED BY D. TURNER
DRAWN BY J. SCHULZ
DATE 10/2011

KALAMA FALLS HATCHERY
MODROW TRAP MODIFICATIONS
MECHANICAL
FISH LIFT AND VCP DETAILS – III

PROJECT NO. CZ:H28:11-1
SHEET 49 OF 63

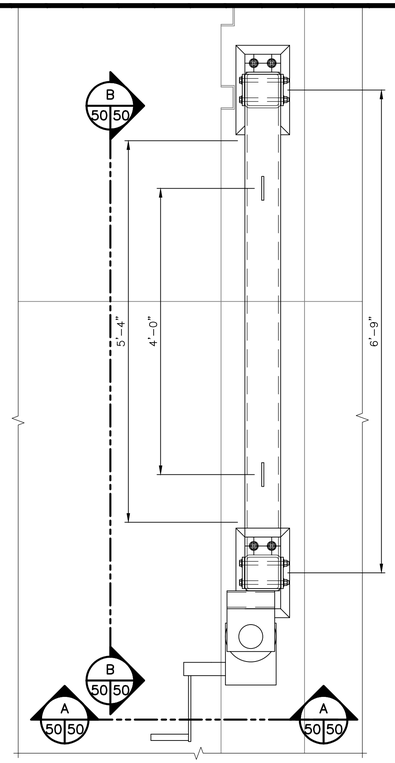

PLAN

DETAIL – FISH LIFT HOIST FRAME
SCALE: 1" = 1'-0"
6 45 50 / 6 46 50

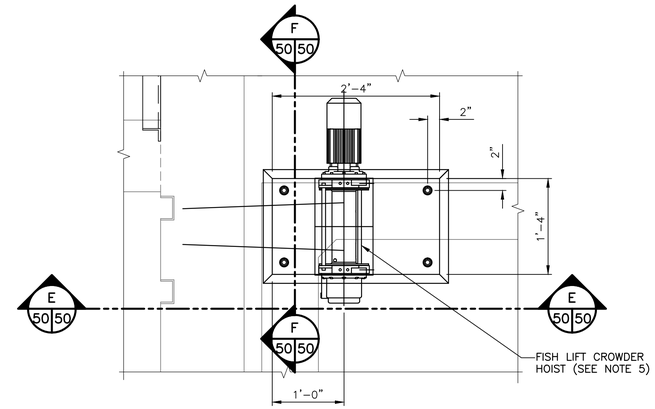

PLAN

DETAIL – VCP DRUM HOIST
SCALE: 1" = 1'-0"
14 45 50 / 14 46 50

NOTES:

1. FISH LIFT HOIST SHALL BE A 4000 LB CAPACITY MANUAL HOIST. "THERN 482B" IR APPROVED EQUAL.
2. SHEAVES SHALL BE 6" DIA FOR 3/8" DIA ROPE SEALED BEARINGS. "McMASTER CARR #32225T42" OR APPROVED EQUAL.
3. 3/8" CABLE SHALL BE 6X37 IWRC GALVANIZED STEEL.
4. FISH LIFT BLOCK SHALL BE FOR 3/8 WIRE ROPE WITH ROLLERS BEARINGS "McMASTER CARR 8545T32" OR APPROVED EQUAL. ATTACHED TO LUG WITH 5/8" SHACKLE.
5. FISH LIFT CROWDER HOIST SHALL BE DUAL DRUM, A 3500# CAPACITY 1.5 HP HOIST "COLUMBIA HOIST #HF3500" OR APPROVED EQUAL WITH 5/16" 12 STRAND "SPECTRA" ROPE OR APPROVED EQUAL.

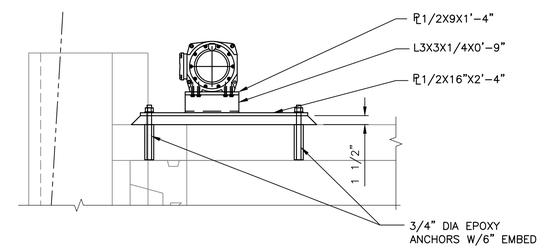

SECTION
SCALE: 1" = 1'-0"
E 50 50

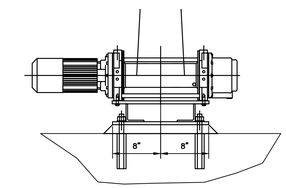

SECTION
SCALE: 1" = 1'-0"
F 50 50

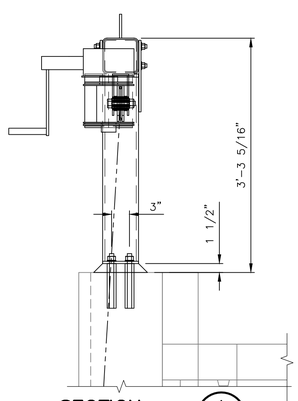

SECTION
SCALE: 1" = 1'-0"
A 50 50

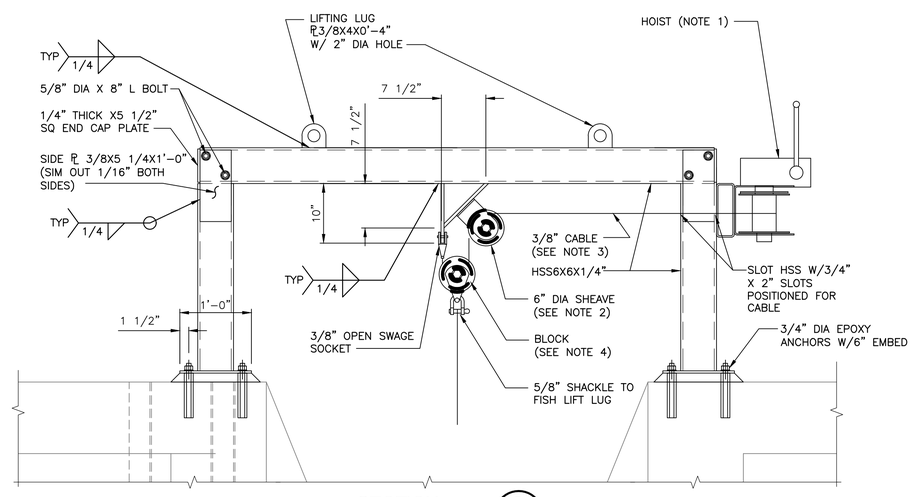

SECTION
SCALE: 1" = 1'-0"
B 50 50

Resource Consultants, Inc.
REDMOND, WA.

WASHINGTON STATE
DEPARTMENT OF FISH AND WILDLIFE

SYM	DATE	REVISION DESCRIPTION	BY

APPROVED AND RELEASED FOR CONSTRUCTION

CHIEF ENGINEER ..... DATE: .....
PROGRAM ..... DATE: .....

0 ——— 1"
BAR MEASURES ONE INCH ON ORIGINAL DRAWINGS

DESIGNED BY F. POSTLEWAITE
CHECKED BY D. TURNER
DRAWN BY J. SCHULZ
DATE 10/2011

KALAMA FALLS HATCHERY

MODROW TRAP MODIFICATIONS

MECHANICAL

FISH LIFT AND VCP DETAILS – IV

PROJECT NO. CZ:H28:11-1

SHEET 50 OF 63

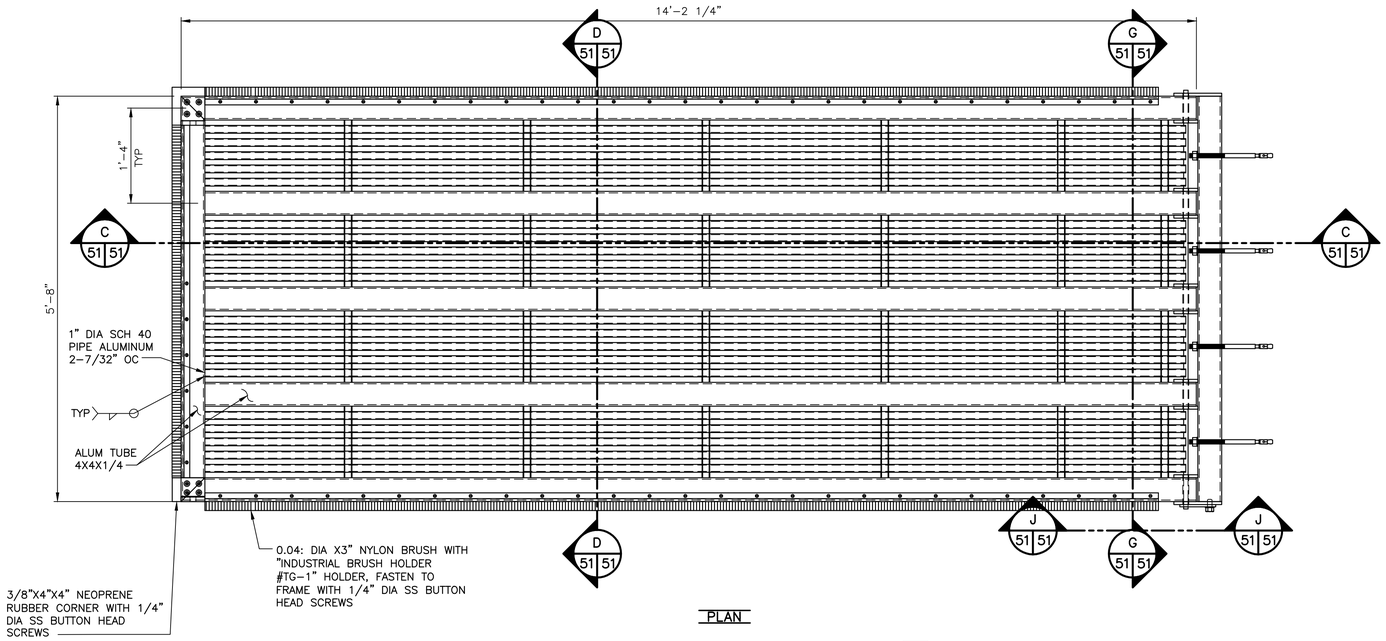

PLAN

DETAIL – VERTICAL CROWDING PANEL (6 / 45 51)
SCALE: 1" = 1'-0"

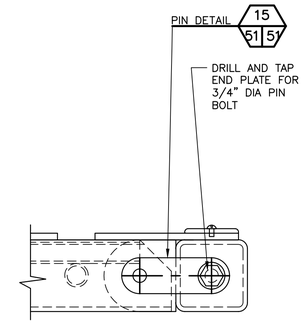

SECTION (J / 51 51)
SCALE: 3" = 1'-0"

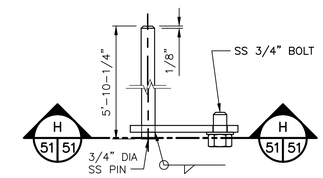

PLAN

PIN DETAIL (15 / 51 51)
SCALE: 3" = 1'-0"

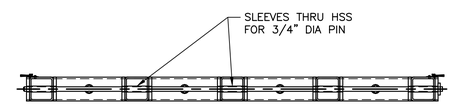

SECTION (G / 51 51)
SCALE: 1" = 1'-0"

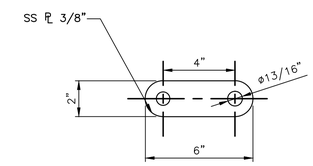

SECTION (H / 51 51)
SCALE: 3" = 1'-0"

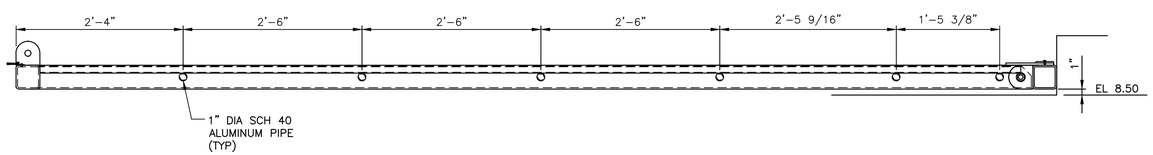

SECTION (C / 51 51)
SCALE: 1" = 1'-0"

SECTION (D / 51 51)
SCALE: 1" = 1'-0"

Resource Consultants, Inc.
REDMOND, WA.

WASHINGTON STATE
DEPARTMENT OF FISH AND WILDLIFE

SYM	DATE	REVISION DESCRIPTION	BY

APPROVED AND RELEASED FOR CONSTRUCTION

CHIEF ENGINEER ..... DATE: .....
PROGRAM ..... DATE: .....

0 —— 1"
BAR MEASURES ONE INCH ON ORIGINAL DRAWINGS

DESIGNED BY F. POSTLEWAITE
CHECKED BY D. TURNER
DRAWN BY J. SCHULZ
DATE 10/2011

KALAMA FALLS HATCHERY

MODROW TRAP MODIFICATIONS
MECHANICAL
FISH LIFT AND VCP DETAILS – V

PROJECT NO. CZ:H28:11-1

SHEET 51 OF 63

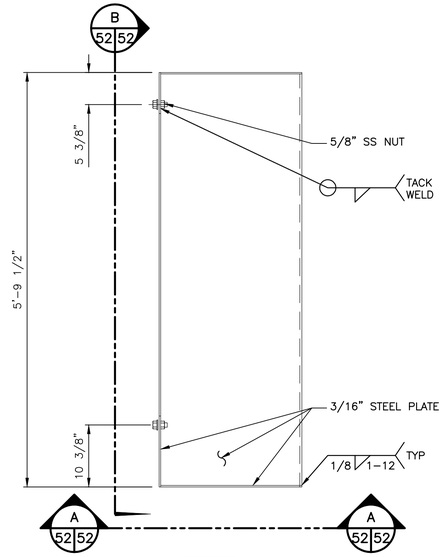

PLAN

DETAIL – VCP LEFT BARRIER
SCALE: 1" = 1'-0"
8 / 45 52

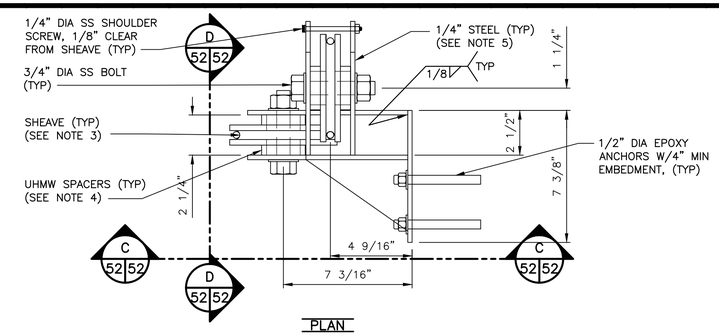

PLAN

DETAIL – VCP SHEAVE ASSY 1
SCALE: 3" = 1'-0"
10 / 45 52 10 / 46 52

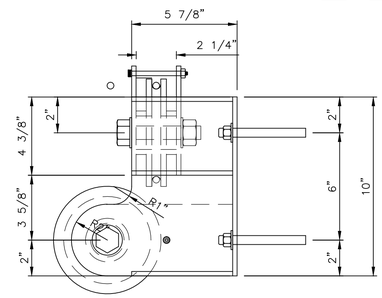

SECTION
SCALE: 3" = 1'-0"
C / 52 52

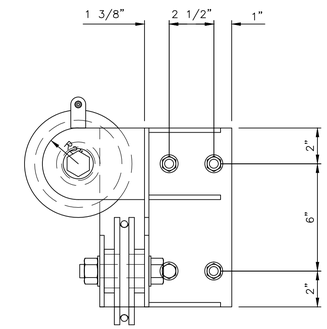

SECTION
SCALE: 3" = 1'-0"
D / 52 52

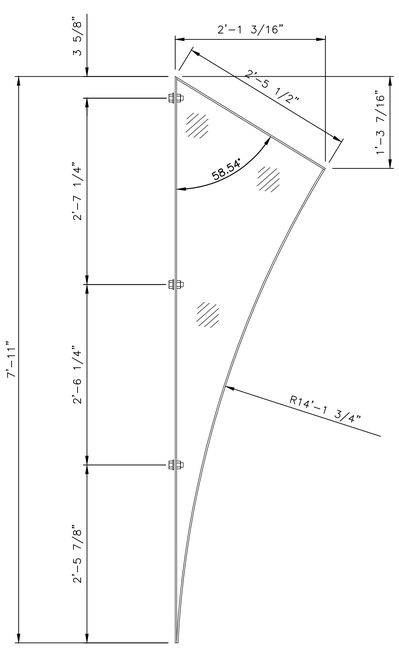

SECTION
SCALE: 1" = 1'-0"
(LEFT AND RIGHT)
A / 52 52

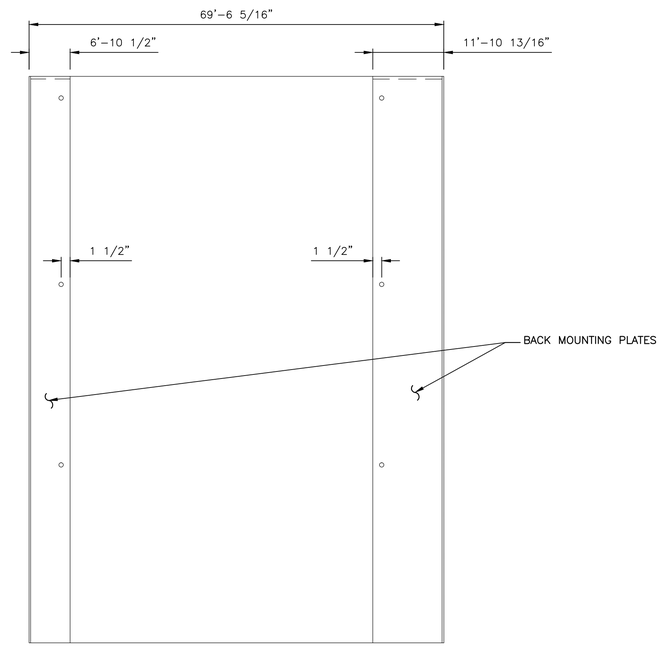

SECTION
SCALE: 1" = 1'-0"
B / 52 52

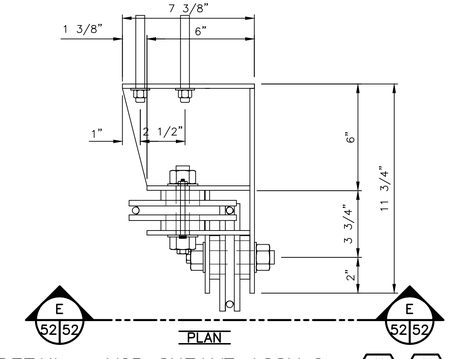

PLAN

DETAIL – VCP SHEAVE ASSY 2
SCALE: 3" = 1'-0"
11 / 45 52 11 / 46 52

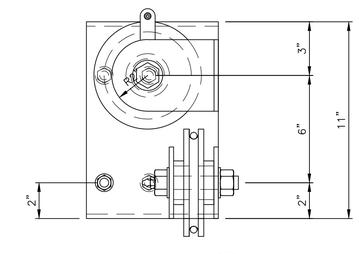

SECTION
SCALE: 3" = 1'-0"
E / 52 52

NOTES:

1. FISH LIFT CROWDER RADIUS BARRIER SHALL BE COATED FOR SUBMERGED SERVICE PER SPECIFICATION 09900.
2. POSITION BARRIER IN FIELD TO ACHIEVE 0" TO 0.5" CLEARANCE FROM CROWDER BRUSHES.
3. SHEAVE SHALL BE 4.25" DIA SS WITH SS BALL BEARING. McMASTER CARR 3629T24 OF APPROVED EQUAL.
4. CENTER SHEAVES WITHIN MOUNTING PLATES WITH 11/16" ID X 3" OD UHMW SPACER TO ALLOW 1/16" OVERALL CLEARANCE.
5. SHEAVE MOUNTING PLATES SHALL BE HOT DIP GALVANIZED.

Resource Consultants, Inc.
REDMOND, WA.

WASHINGTON STATE
DEPARTMENT OF FISH AND WILDLIFE

SYM	DATE	REVISION DESCRIPTION	BY
		APPROVED AND RELEASED FOR CONSTRUCTION	

CHIEF ENGINEER ..... DATE: .....
PROGRAM ..... DATE: .....

0 ——— 1"
BAR MEASURES ONE INCH ON ORIGINAL DRAWINGS

DESIGNED BY F. POSTLEWAITE
CHECKED BY D. TURNER
DRAWN BY J. SCHULZ
DATE 10/2011

KALAMA FALLS HATCHERY
MODROW TRAP MODIFICATIONS
MECHANICAL
FISH LIFT AND VCP DETAILS – VI

PROJECT NO. CZ:H28:11-1
SHEET 52 OF 63

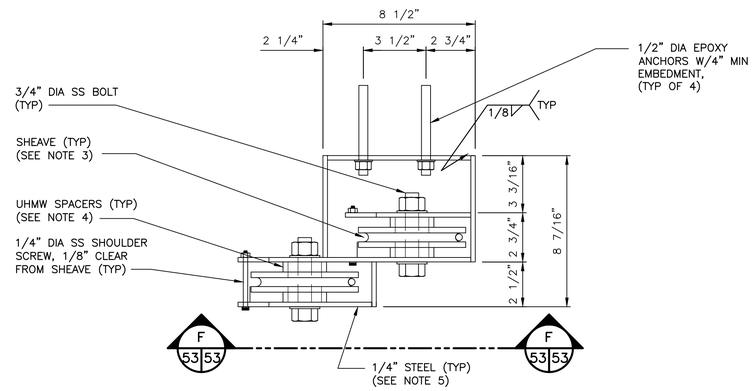

PLAN

DETAIL – VCP SHEAVE ASSY 3 (12 45 53) (12 46 53)

SCALE: 3" = 1'-0"

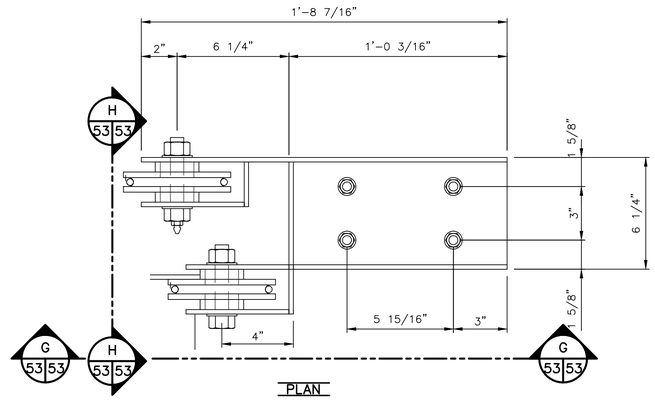

PLAN

DETAIL – VCP SHEAVE ASSY 4 (13 45 53) (13 46 53)

SCALE: 3" = 1'-0"

NOTES:

1. FISH LIFT CROWDER RADIUS BARRIER SHALL BE COATED FOR SUBMERGED SERVICE PER SPECIFICATION 09900.
2. POSITION BARRIER IN FIELD TO ACHIEVE 0" TO 0.5" CLEARANCE FROM CROWDER BRUSHES.
3. SHEAVE SHALL BE 4.25" DIA SS WITH SS BALL BEARING. McMASTER CARR 3629T24 OF APPROVED EQUAL.
4. CENTER SHEAVES WITHIN MOUNTING PLATES WITH 11/16" ID X 3" OD UHMW SPACER TO ALLOW 1/16" OVERALL CLEARANCE.
5. SHEAVE MOUNTING PLATES SHALL BE HOT DIP GALVANIZED.

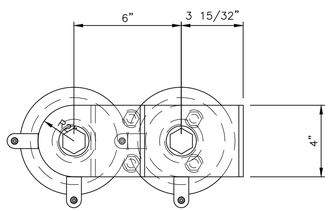

SECTION (F 53 53)

SCALE: 3" = 1'-0"

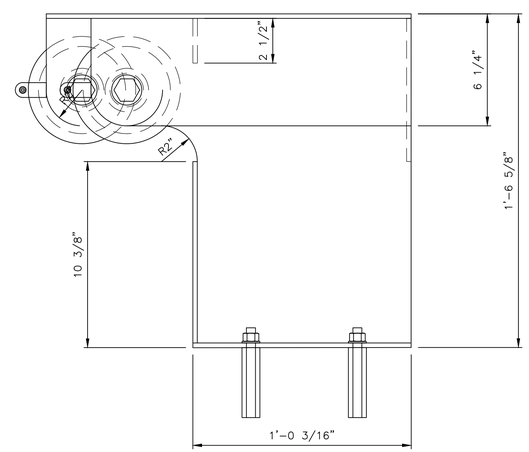

SECTION (G 53 53)

SCALE: 3" = 1'-0"

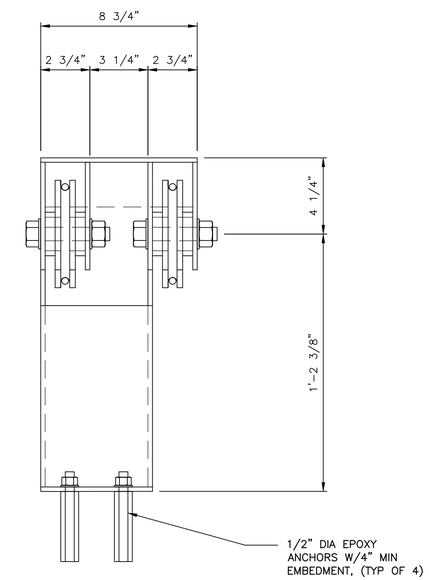

SECTION (H 53 53)

SCALE: 3" = 1'-0"

Resource Consultants, Inc.
REDMOND, WA.

WASHINGTON STATE
DEPARTMENT OF FISH AND WILDLIFE

SYM	DATE	REVISION DESCRIPTION	BY

APPROVED AND RELEASED FOR CONSTRUCTION

CHIEF ENGINEER ..... DATE: .....
PROGRAM ..... DATE: .....

0 — 1"
BAR MEASURES ONE INCH ON ORIGINAL DRAWINGS

DESIGNED BY F. POSTLEWAITE
CHECKED BY D. TURNER
DRAWN BY J. SCHULZ
DATE 10/2011

KALAMA FALLS HATCHERY

MODROW TRAP MODIFICATIONS
MECHANICAL
FISH LIFT AND VCP DETAILS – VII

PROJECT NO. CZ:H28:11–1

SHEET 53 OF 63

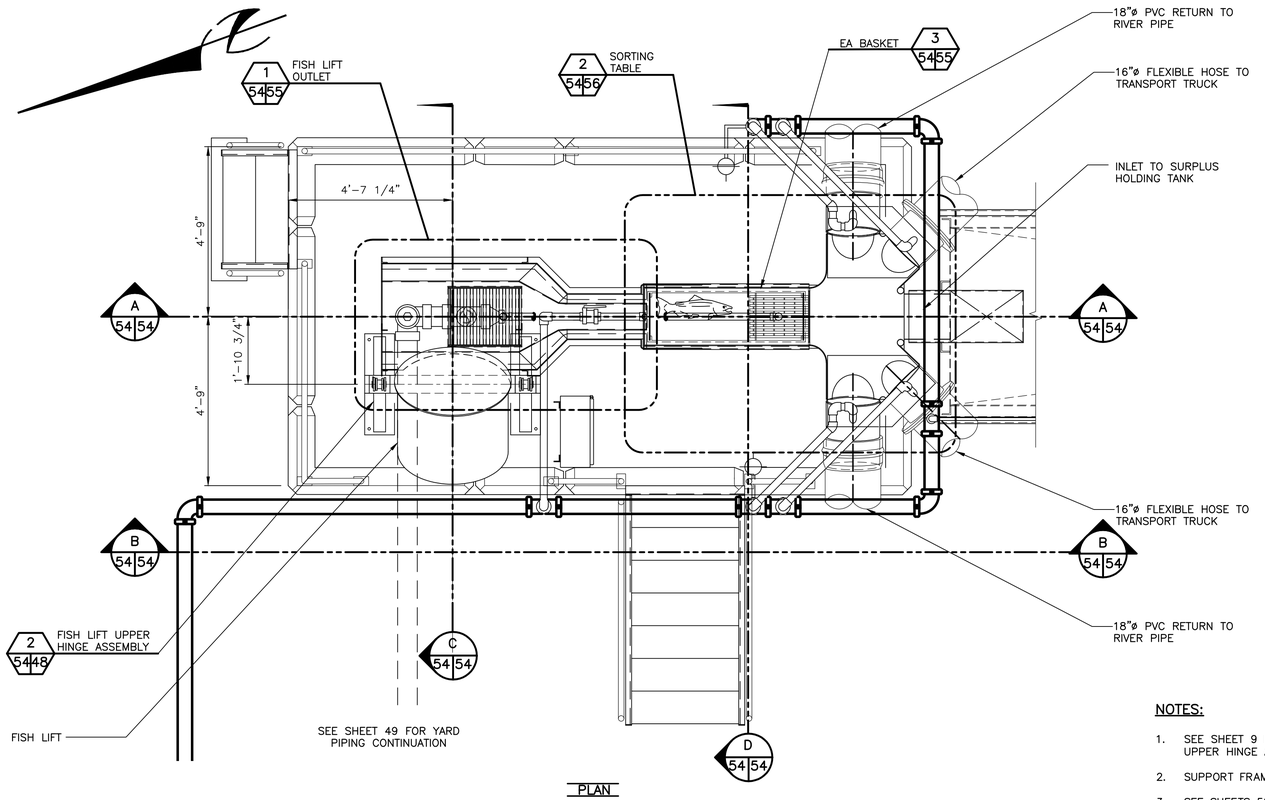

PLAN

FISH LIFT TRANSITION / EA BASKET / SORTING TABLE 4 35 54

SCALE: 1/2" = 1'-0"

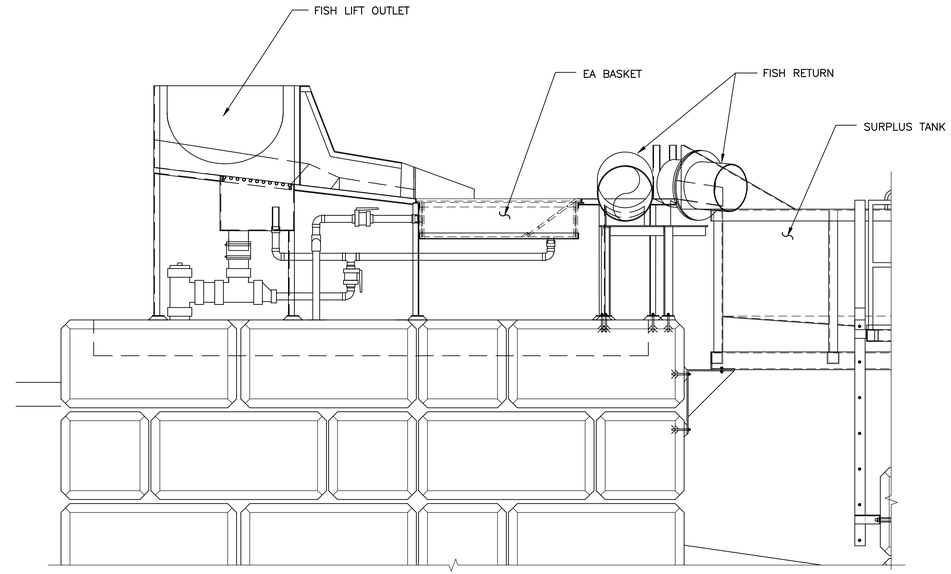

SECTION B 54 54

SCALE: 1/2" = 1'-0"

NOTES:

1. SEE SHEET 9 FOR COORDINATES TO LOCATE SORTING TABLE AND FISH LIFT UPPER HINGE ASSEMBLY.
2. SUPPORT FRAMING AND PLATE SHALL BE SS.
3. SEE SHEETS 58 AND 59 FOR YARD PIPING SIZES.

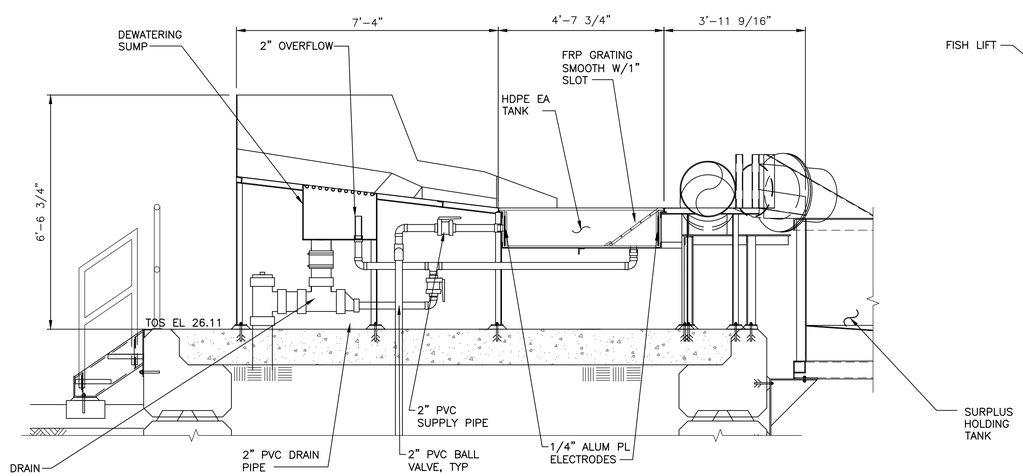

SECTION A 54 54

SCALE: 1/2" = 1'-0"

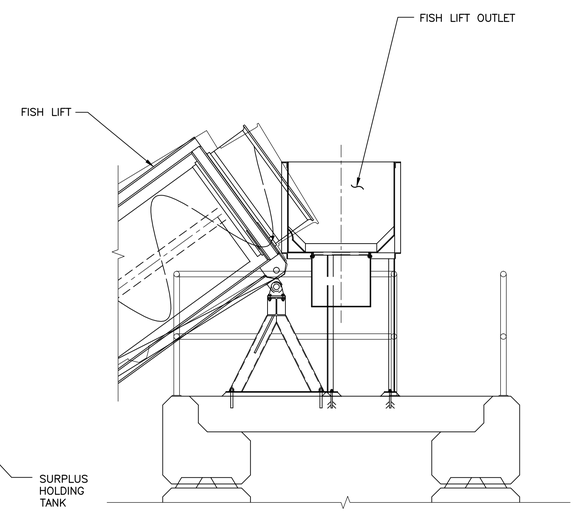

SECTION C 54 54

SCALE: 1/2" = 1'-0"

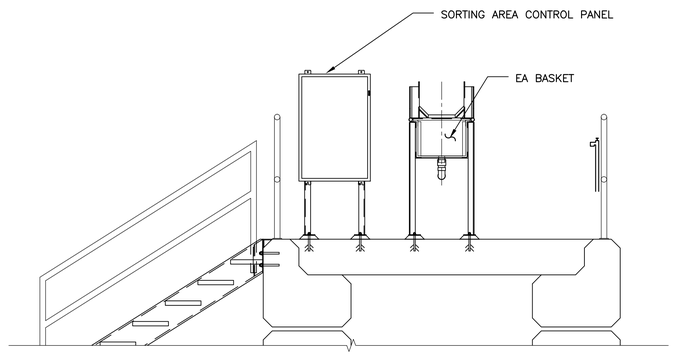

SECTION D 54 54

SCALE: 1/2" = 1'-0"

Resource Consultants, Inc.
REDMOND, WA.

WASHINGTON STATE
DEPARTMENT OF FISH AND WILDLIFE

SYM	DATE	REVISION DESCRIPTION	BY

APPROVED AND RELEASED FOR CONSTRUCTION

CHIEF ENGINEER ..... DATE: .....

PROGRAM ..... DATE: .....

0 — 1"
BAR MEASURES ONE INCH ON ORIGINAL DRAWINGS

DESIGNED BY F. POSTLEWAITE
CHECKED BY D. TURNER
DRAWN BY J. SCHULZ
DATE 10/2011

KALAMA FALLS HATCHERY

MODROW TRAP MODIFICATIONS

MECHANICAL

FISH LIFT TRANS/EA BASKET/SORTING TBL

PROJECT NO. CZ:H28:11-1

SHEET 54 OF 63

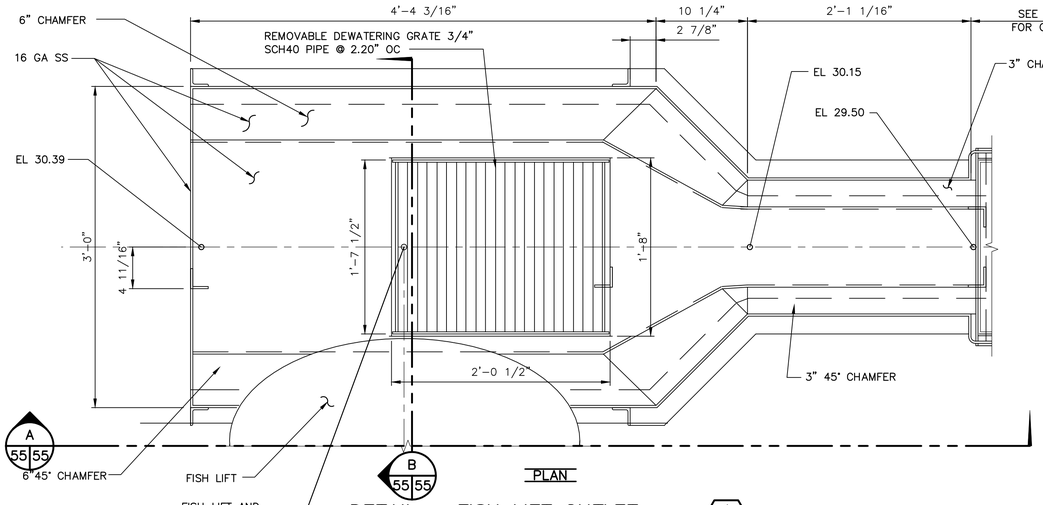

DETAIL – FISH LIFT OUTLET (1 / 54 55)

SCALE: 1–1/2" = 1'–0"

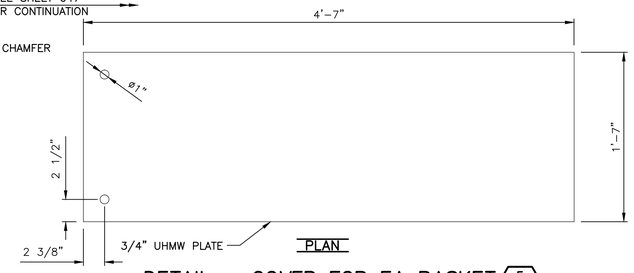

DETAIL – COVER FOR EA BASKET (5 / 55 55)

SCALE: 1–1/2" = 1'–0"

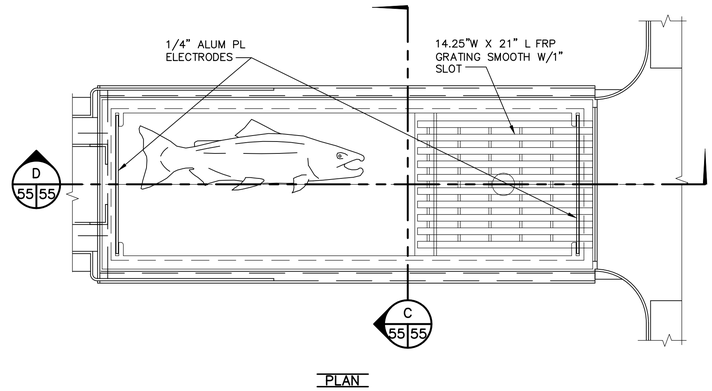

DETAIL – EA BASKET (3 / 54 55)

SCALE: 1–1/2" = 1'–0"

NOTES:

1. SEE SHEET 9 FOR COORDINATES TO LOCATE SORTING TABLE AND FISH LIFT UPPER HINGE ASSEMBLY.
2. SUPPORT FRAMING AND PLATE SHALL BE SS.

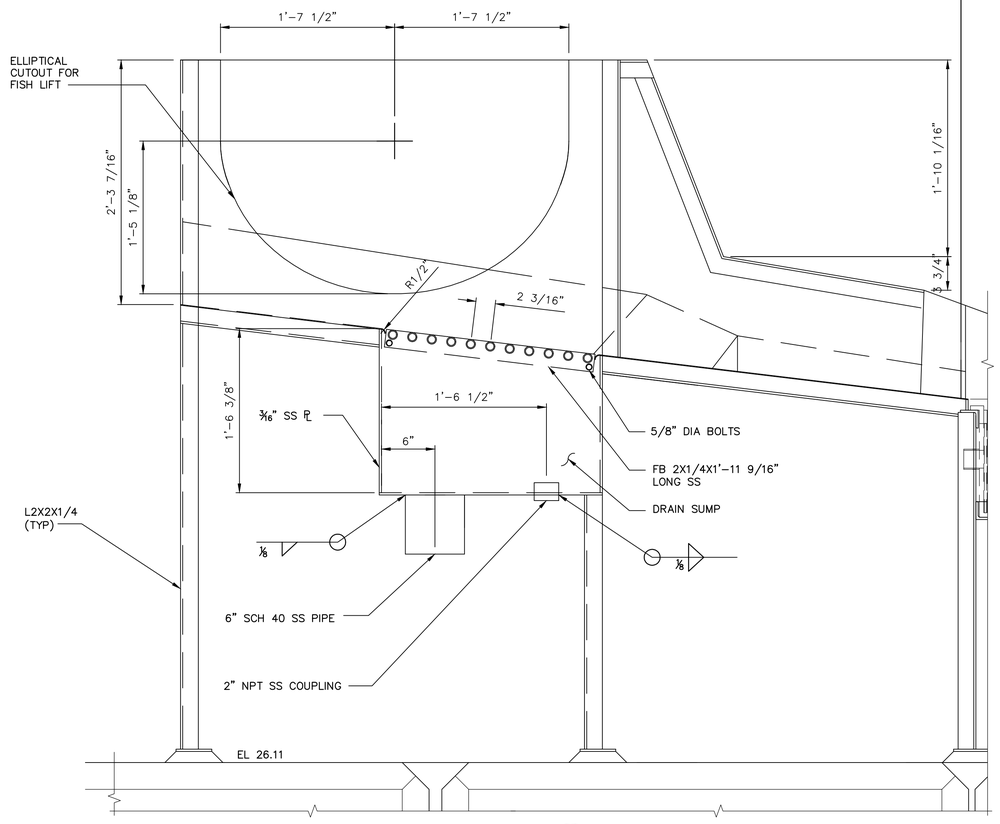

SECTION (A / 55 55)

SCALE: 1–1/2" = 1'–0"

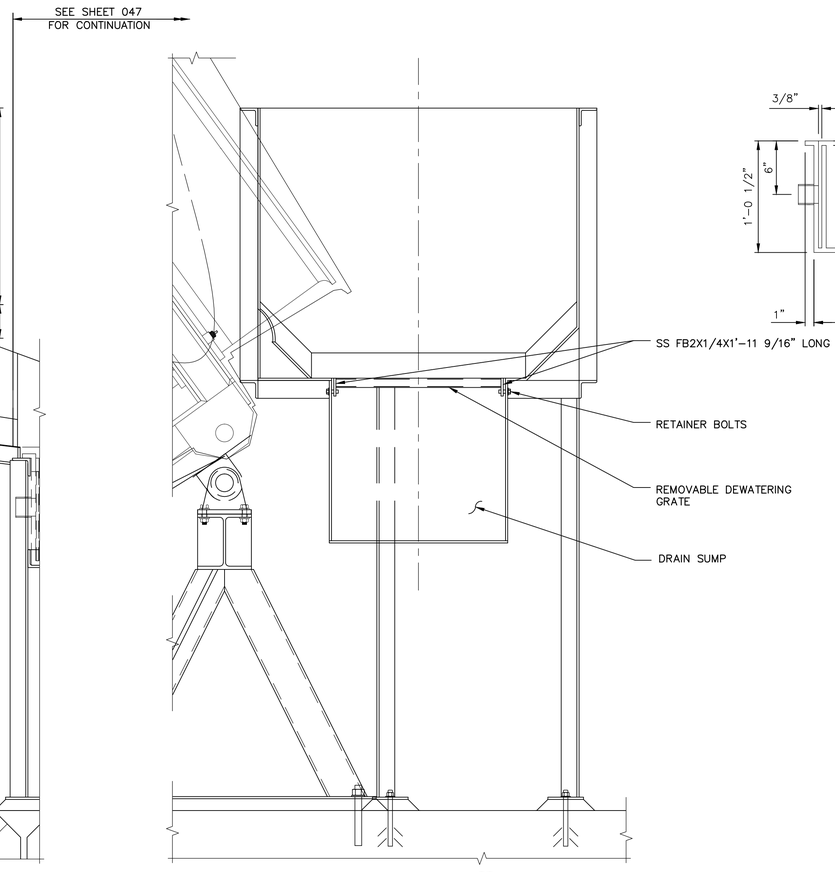

SECTION (B / 55 55)

SCALE: 1–1/2" = 1'–0"

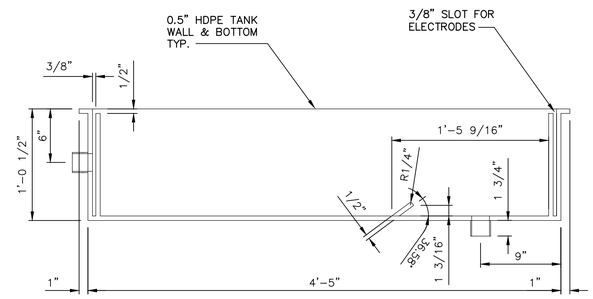

SECTION (D / 55 55)

SCALE: 1–1/2" = 1'–0"

ONLY TANK SHOWN FOR CLARITY

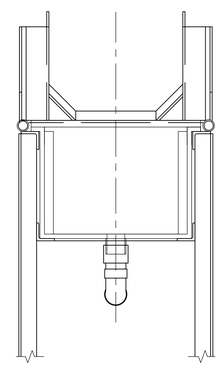

SECTION (C / 55 55)

SCALE: 1–1/2" = 1'–0"

Resource Consultants, Inc.
REDMOND, WA.

WASHINGTON STATE
DEPARTMENT OF FISH AND WILDLIFE

SYM	DATE	REVISION DESCRIPTION	BY
		APPROVED AND RELEASED FOR CONSTRUCTION	

CHIEF ENGINEER ..... DATE: .....
PROGRAM ..... DATE: .....

0 — 1"
BAR MEASURES ONE INCH ON ORIGINAL DRAWINGS

DESIGNED BY F. POSTLEWAITE
CHECKED BY D. TURNER
DRAWN BY J. SCHULZ
DATE 10/2011

KALAMA FALLS HATCHERY

MODROW TRAP MODIFICATIONS
MECHANICAL
FISH LIFT TRANS/EA BASKET

PROJECT NO. CZ:H28:11–1

SHEET 55 OF 63

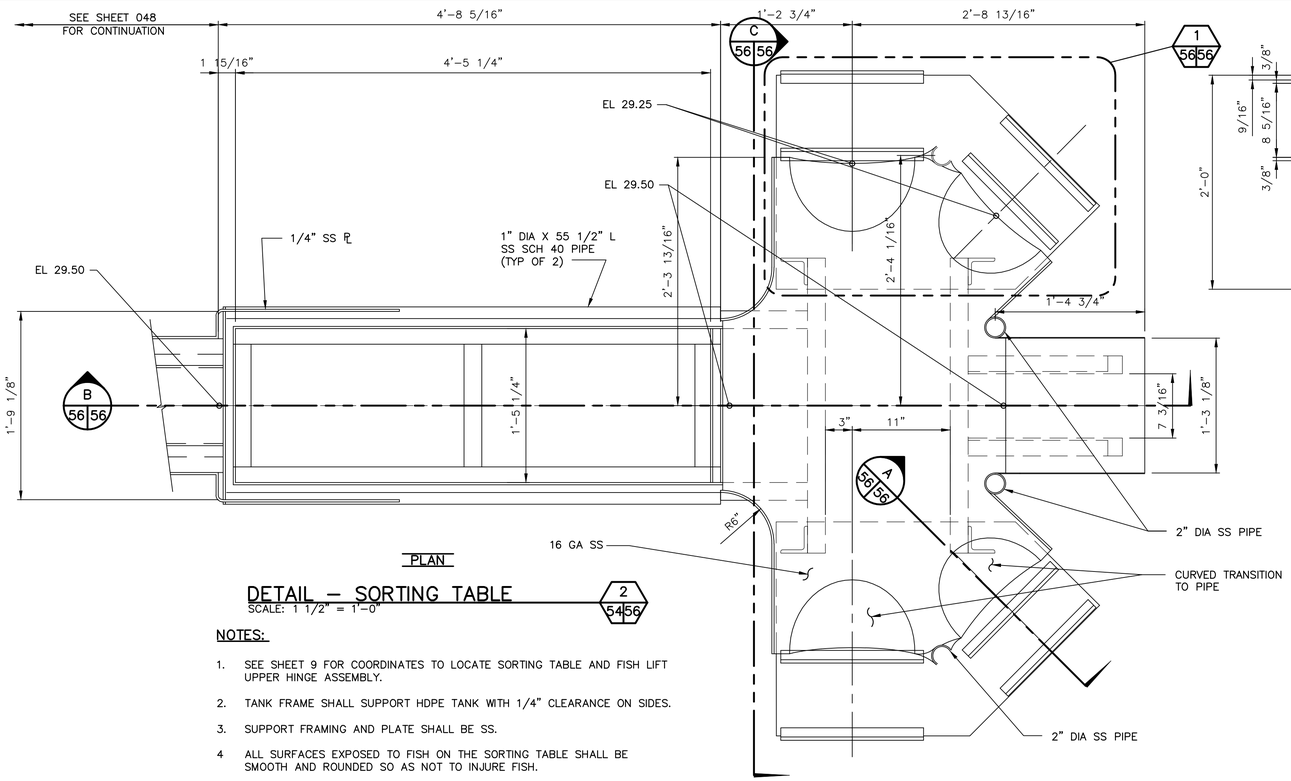

PLAN

DETAIL – SORTING TABLE (2 / 54 56)
SCALE: 1 1/2" = 1'-0"

NOTES:

1. SEE SHEET 9 FOR COORDINATES TO LOCATE SORTING TABLE AND FISH LIFT UPPER HINGE ASSEMBLY.
2. TANK FRAME SHALL SUPPORT HDPE TANK WITH 1/4" CLEARANCE ON SIDES.
3. SUPPORT FRAMING AND PLATE SHALL BE SS.
4. ALL SURFACES EXPOSED TO FISH ON THE SORTING TABLE SHALL BE SMOOTH AND ROUNDED SO AS NOT TO INJURE FISH.

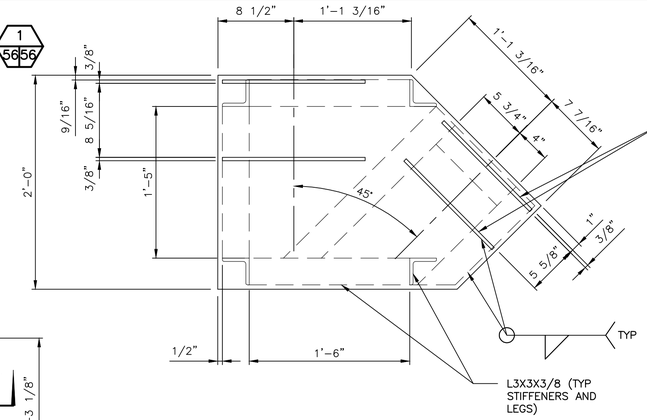

DETAIL–PIPE SUPPORT PLATE (1 / 56 56)
SCALE: 1 1/2" = 1'-0"

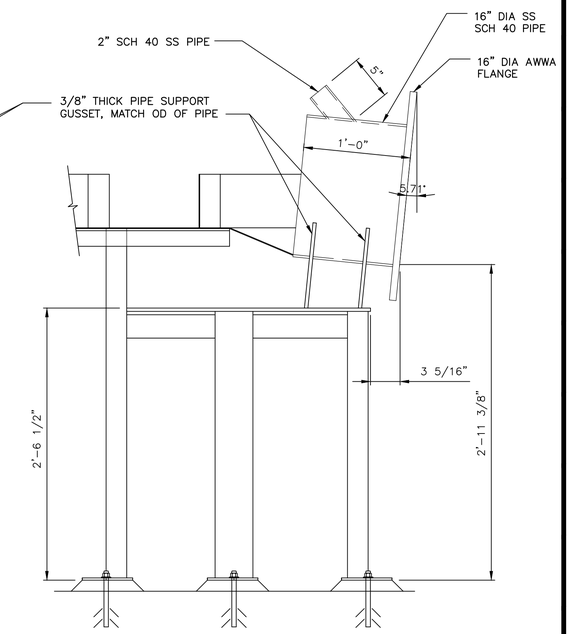

SECTION (A / 56 56)
SCALE: 1 1/2" = 1'-0"

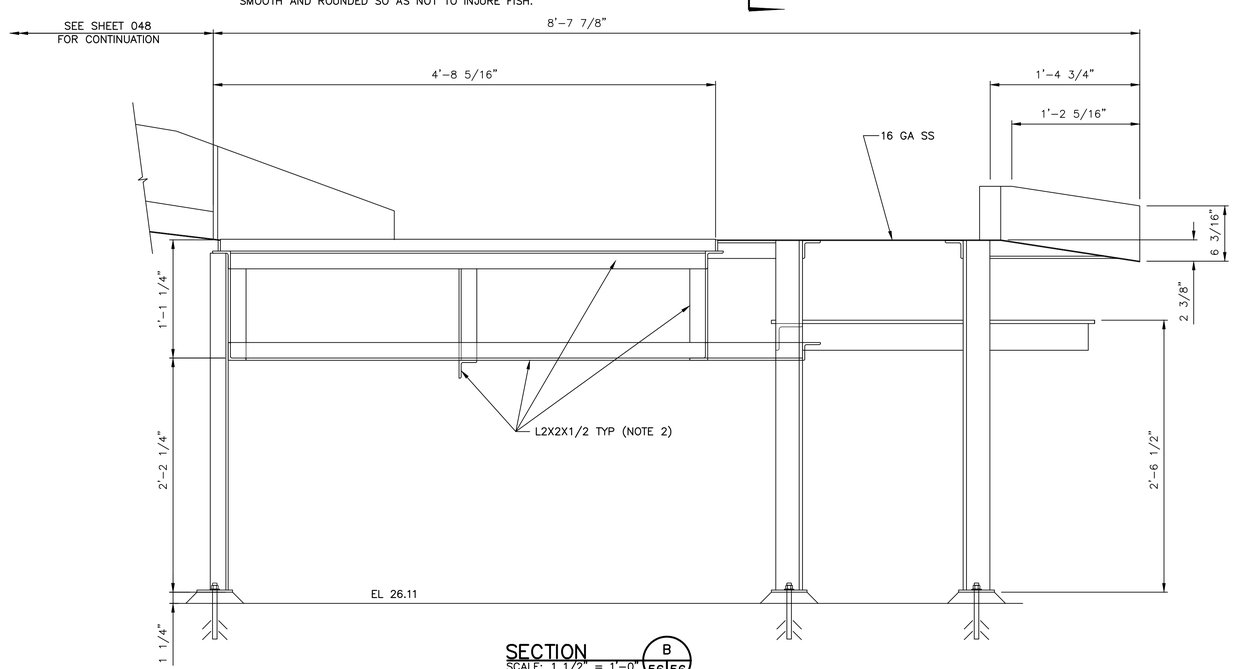

SECTION (B / 56 56)
SCALE: 1 1/2" = 1'-0"

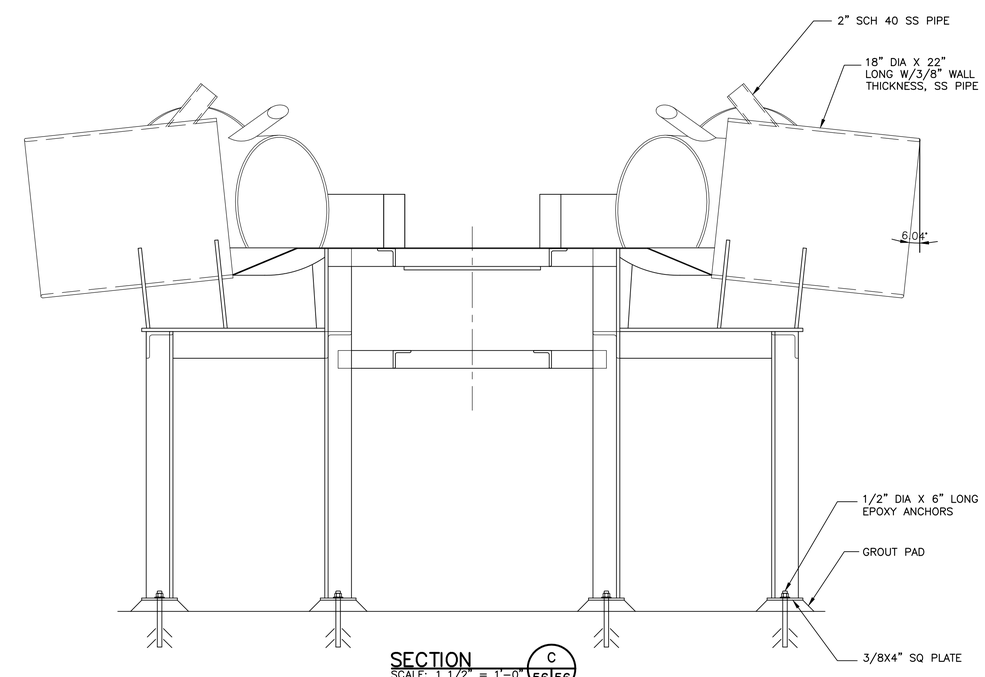

SECTION (C / 56 56)
SCALE: 1 1/2" = 1'-0"

Resource Consultants, Inc.
REDMOND, WA.

WASHINGTON STATE
DEPARTMENT OF FISH AND WILDLIFE

SYM	DATE	REVISION DESCRIPTION	BY

APPROVED AND RELEASED FOR CONSTRUCTION

CHIEF ENGINEER ..... DATE: .....
PROGRAM ..... DATE: .....

0 — 1"
BAR MEASURES ONE INCH ON ORIGINAL DRAWINGS

DESIGNED BY F. POSTLEWAITE
CHECKED BY D. TURNER
DRAWN BY J. SCHULZ
DATE 10/2011

KALAMA FALLS HATCHERY

MODROW TRAP MODIFICATIONS
MECHANICAL
FISH SORTING TABLE

PROJECT NO. CZ:H28:11–1

SHEET 56 OF 63

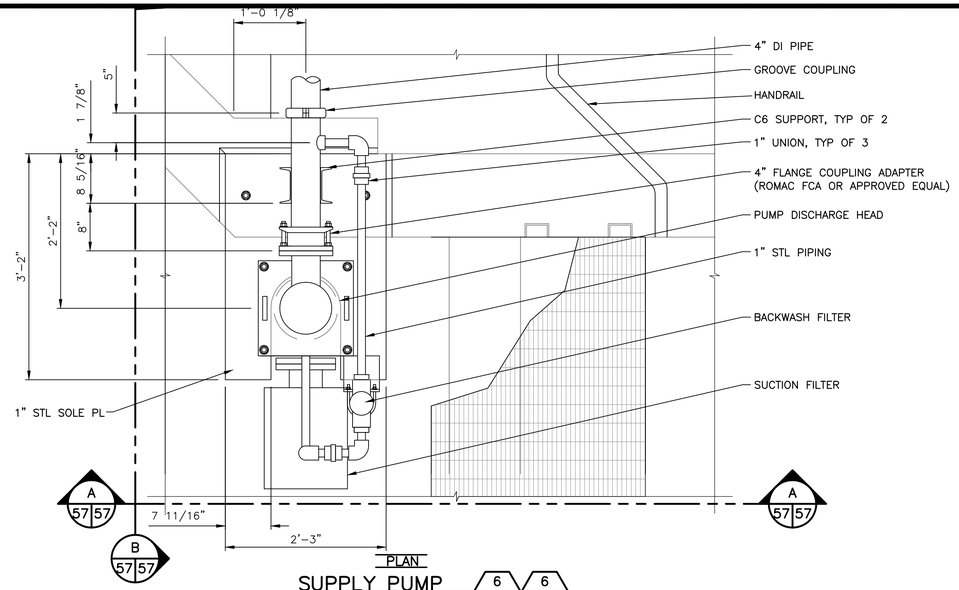

PLAN

SUPPLY PUMP 6 35 57 6 58 57

SCALE: 1" = 1'-0"

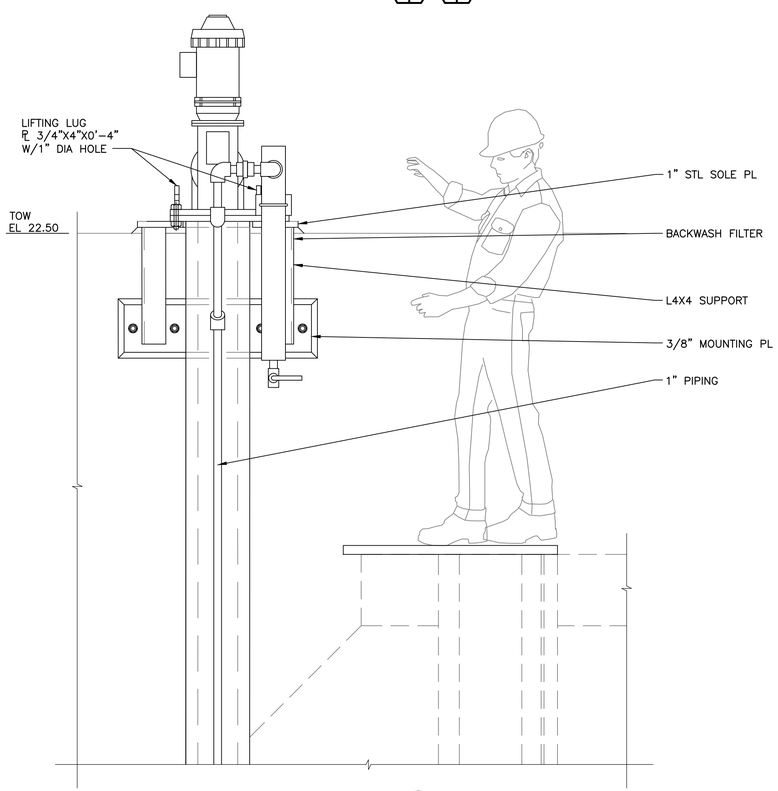

SECTION A 57 57

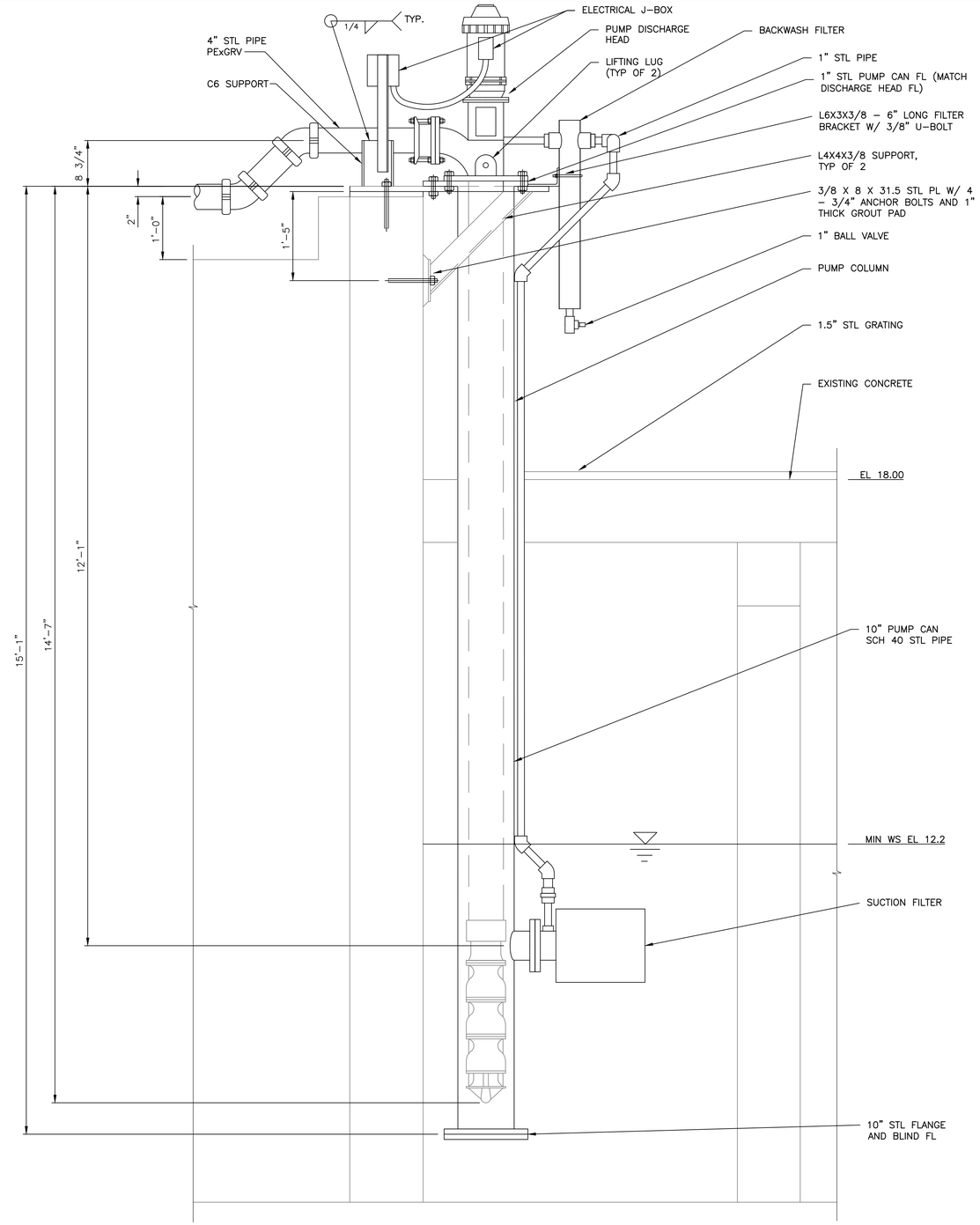

SECTION B 57 57

Resource Consultants, Inc.
REDMOND, WA.

WASHINGTON STATE
DEPARTMENT OF FISH AND WILDLIFE

SYM	DATE	REVISION DESCRIPTION	BY

APPROVED AND RELEASED FOR CONSTRUCTION

CHIEF ENGINEER ..... DATE: .....
PROGRAM ..... DATE: .....

0 — 1"
BAR MEASURES ONE INCH ON ORIGINAL DRAWINGS

DESIGNED BY F. POSTALWAITE
CHECKED BY D. TURNER
DRAWN BY B. GOCHENOUR
DATE 9/2011

KALAMA FALLS HATCHERY

MODROW TRAP MODIFICATIONS
MECHANICAL
SUPPLY PUMP

PROJECT NO. CZ:H28:11-1

SHEET 57 OF 63

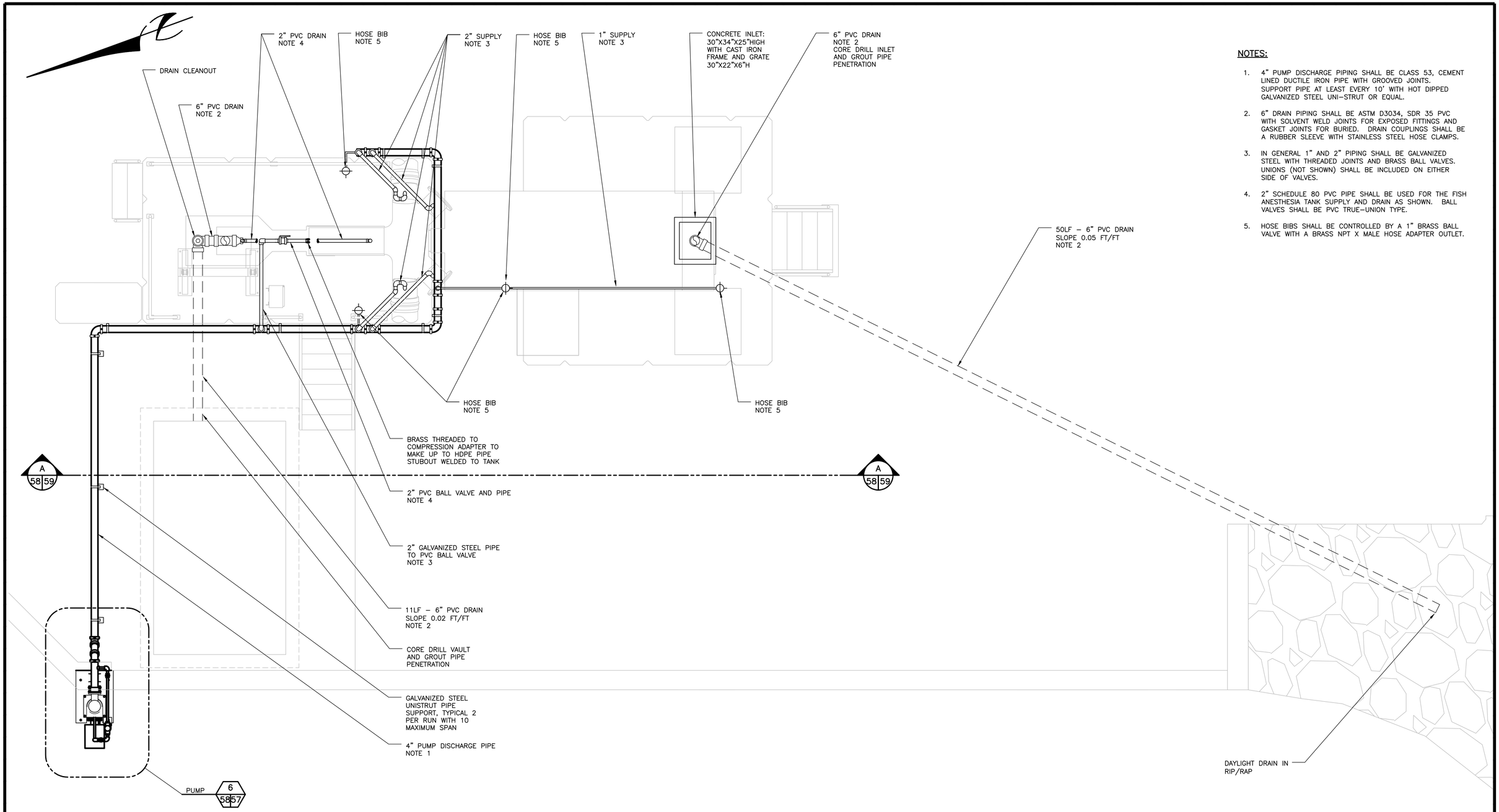

NOTES:

1. 4" PUMP DISCHARGE PIPING SHALL BE CLASS 53, CEMENT LINED DUCTILE IRON PIPE WITH GROOVED JOINTS. SUPPORT PIPE AT LEAST EVERY 10' WITH HOT DIPPED GALVANIZED STEEL UNI–STRUT OR EQUAL.
2. 6" DRAIN PIPING SHALL BE ASTM D3034, SDR 35 PVC WITH SOLVENT WELD JOINTS FOR EXPOSED FITTINGS AND GASKET JOINTS FOR BURIED. DRAIN COUPLINGS SHALL BE A RUBBER SLEEVE WITH STAINLESS STEEL HOSE CLAMPS.
3. IN GENERAL 1" AND 2" PIPING SHALL BE GALVANIZED STEEL WITH THREADED JOINTS AND BRASS BALL VALVES. UNIONS (NOT SHOWN) SHALL BE INCLUDED ON EITHER SIDE OF VALVES.
4. 2" SCHEDULE 80 PVC PIPE SHALL BE USED FOR THE FISH ANESTHESIA TANK SUPPLY AND DRAIN AS SHOWN. BALL VALVES SHALL BE PVC TRUE–UNION TYPE.
5. HOSE BIBS SHALL BE CONTROLLED BY A 1" BRASS BALL VALVE WITH A BRASS NPT X MALE HOSE ADAPTER OUTLET.

YARD PIPING PLAN 9 35|58
SCALE: 3/8" = 1'–0"

Resource Consultants, Inc.
REDMOND, WA.

WASHINGTON STATE
DEPARTMENT OF FISH AND WILDLIFE

SYM	DATE	REVISION DESCRIPTION	BY

APPROVED AND RELEASED FOR CONSTRUCTION
CHIEF ENGINEER ..... DATE: .....
PROGRAM ..... DATE: .....

0 —— 1"
BAR MEASURES ONE INCH ON ORIGINAL DRAWINGS

DESIGNED BY F. POSTLEWAITE
CHECKED BY D. TURNER
DRAWN BY J. SCHULZ
DATE 10/2011

KALAMA FALLS HATCHERY
MODROW TRAP MODIFICATIONS
MECHANICAL
YARD PIPING – PLAN

PROJECT NO. CZ:H28:11–1
SHEET 58 OF 63

NOTES:

1. 4" PUMP DISCHARGE PIPING SHALL BE CLASS 53, CEMENT LINED DUCTILE IRON PIPE WITH GROOVED JOINTS. SUPPORT PIPE AT LEAST EVERY 10' WITH HOT DIPPED GALVANIZED STEEL UNI-STRUT OR EQUAL.
2. 6" DRAIN PIPING SHALL BE ASTM D3034, SDR 35 PVC WITH SOLVENT WELD JOINTS FOR EXPOSED FITTINGS AND GASKET JOINTS FOR BURIED. DRAIN COUPLINGS SHALL BE A RUBBER SLEEVE WITH STAINLESS STEEL HOSE CLAMPS.
3. IN GENERAL 1" AND 2" PIPING SHALL BE GALVANIZED STEEL WITH THREADED JOINTS AND BRASS BALL VALVES. UNIONS (NOT SHOWN) SHALL BE INCLUDED AS NEEDED TO ALLOW PIPING TO BE READILY DISSEMBLED.
4. 2" SCHEDULE 80 PVC PIPE SHALL BE USED FOR THE FISH ANESTHESIA TANK SUPPLY AND DRAIN AS SHOWN. BALL VALVES SHALL BE PVC TRUE-UNION TYPE.
5. HOSE BIBS SHALL BE CONTROLLED BY A 1" BRASS BALL VALVE WITH A BRASS NPT X MALE HOSE ADAPTER OUTLET.

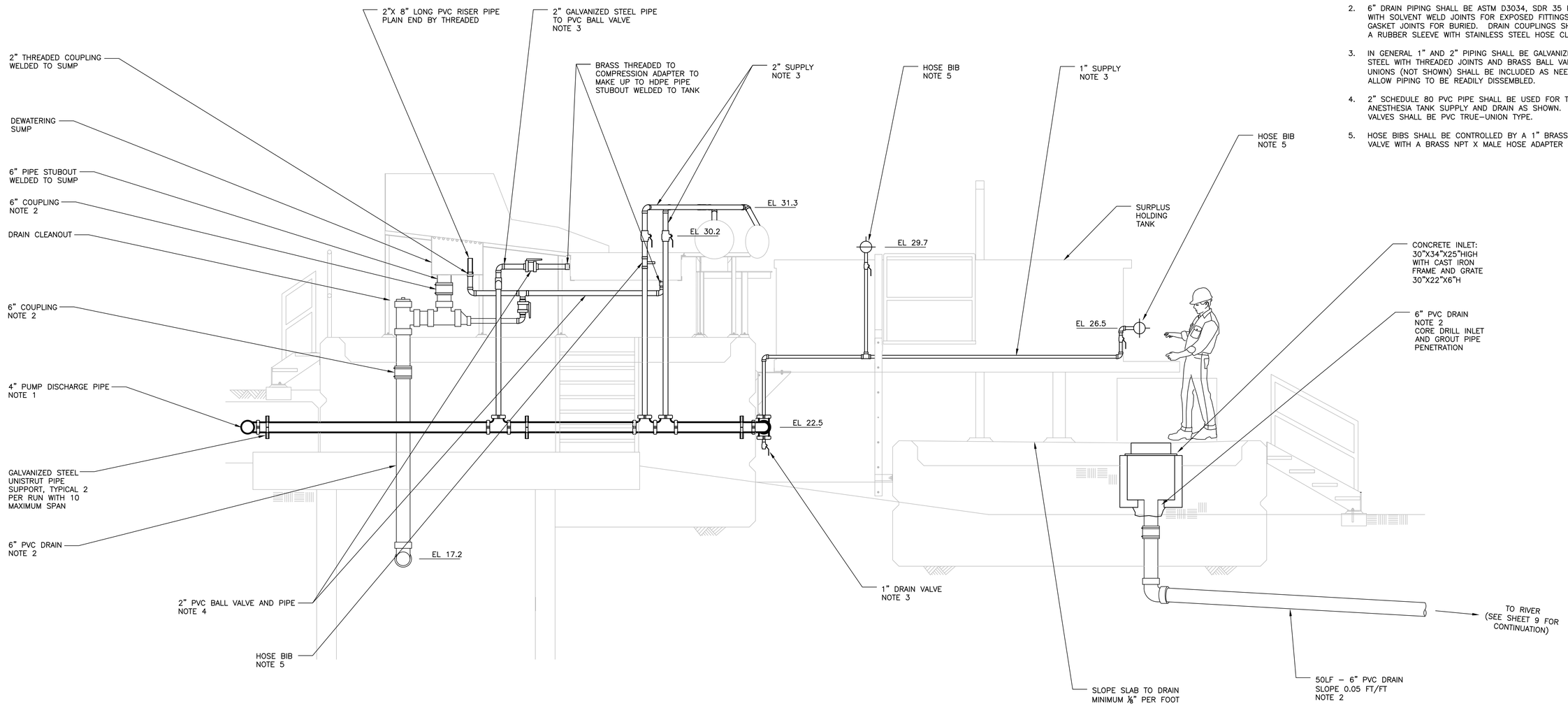

ELEVATION (A 58/59)
SCALE: 1/2" = 1'-0"

Resource Consultants, Inc.
REDMOND, WA.

WASHINGTON STATE
DEPARTMENT OF FISH AND WILDLIFE

SYM	DATE	REVISION DESCRIPTION	BY

APPROVED AND RELEASED FOR CONSTRUCTION
CHIEF ENGINEER ..... DATE: .....
PROGRAM ..... DATE: .....

0 — 1"
BAR MEASURES ONE INCH ON ORIGINAL DRAWINGS

DESIGNED BY F. POSTLEWAITE
CHECKED BY D. TURNER
DRAWN BY J. SCHULZ
DATE 10/2011

KALAMA FALLS HATCHERY
MODROW TRAP MODIFICATIONS
MECHANICAL
YARD PIPING - ELEVATION

PROJECT NO. CZ:H28:11-1
SHEET 59 OF 63

SYMBOL (SCHEMATIC / PLAN)	DESCRIPTION
	GROUND ROD IN GROUND ROD BOX
	BATTERY.
T	TRANSFORMER, PLAN VIEW SHOWN TO SCALE
3	CURRENT TRANSFORMER, NUMBER INDICATES NUMBER OF C.T.'S.
10	MOTOR, NUMBER INDICATES HORSEPOWER
G	GENERATOR WITH EXHAUST DUCTING
	MOTOR STARTER W/DISCONNECT
	PACKAGED POWER AND CONTROL PANEL
100AF 200AS / 60A	DISCONNECT SWITCH, NON FUSED (60A) INDICATES AMPERAGE RATING
F 200/100	DISCONNECT SWITCH, FUSED 200=SWITCH RATING, 100=FUSE RATING
M	UTILITY METERING
R	INDICATING LIGHT: A = AMBER, B = BLUE, G = GREEN, R = RED, W = WHITE
R	LIGHTED PUSHBUTTON WITH LENS COLOR ABOVE
HAND OFF AUTO / HOA	SELECTOR SWITCH: HOR = HAND/OFF/REMOTE, HOA = HAND/OFF/AUTO, RO = RUN/OFF
HS	HAND STATION
CP	LOCAL CONTROL PANEL
PB	PUSHBUTTON SWITCH. MOMENTARY ON.
PS	PRESSURE SWITCH. NORMALLY CLOSED.
FS	FLOW SWITCH. NORMALLY CLOSED.
ZS	LIMIT SWITCH, NORMALLY OPEN.
LS	LEVEL SWITCH, CLOSES ON RISING LEVEL
TS T	TS, TEMP. SWITCH, CLOSES ON FALLING TEMP. T, THERMOSTAT
CR	CONTROL RELAY
	POTENTIOMETER
LT	LEVEL TRANSMITTER
PT	PRESSURE TRANSMITTER
SI	SPEED INDICATOR
FT	FLOW TRANSMITTER
S	SMOKE DETECTOR
	HEAT DETECTOR
SV	SOLENOID VALVE.
150W	ELECTRIC HEATER
T	THERMOSTAT
TDR	TIME DELAY RELAY TDOE = TIME DELAY ON ENERGIZATION TDOD = TIME DELAY ON DE-ENERGIZATION
D	DOOR SECURITY SWITCH
VB	VIBRATION SENSOR
LK	LEAK DETECTION FOR SUBMERSIBLE PUMPS
RTD	RESISTANCE TEMPERATURE DEVICE
OT	OVER TEMPERATURE CUTOUT
T	THERMOSTAT
	HORN
P	UNIT HEATER – SHOWING BLOWER DIRECTION

NOTE:

SYMBOLS AND ABBREVIATIONS ON THIS SHEET APPLY ONLY TO THE ELECTRICAL DRAWINGS.

SYMBOL	DESCRIPTION
q F1 2	FLUORESCENT LIGHTING FIXTURE, SURFACE. "F1" INDICATES TYPE PER FIXTURE SCHEDULE. "2" INDICATES CIRCUITING. "q" INDICATES SWITCHING.
	FLUORESCENT LIGHTING FIXTURE, RECESSED. ● INDICATES FIXTURE ON EMERGENCY CIRCUIT.
	FLUORESCENT WRAPAROUND FIXTURE. SURFACE SURFACE OR PENDANT AS INDICATED IN FIXTURE SCHEDULE.
XP	FLUORESCENT LIGHTING FIXTURE FOR HAZARDOUS AREAS. CLASS. AND DIV. AS INDICATED IN FIXTURE SCHEDULE
	FLUORESCENT STRIP, SURFACE OR PENDANT AS INDICATED IN FIXTURE SCHEDULE.
	INCANDESCENT, COMPACT FLUORESCENT, OR H.I.D. LIGHTING FIXTURE, CEILING MOUNTED.
	INCANDESCENT,COMPACT FLUORESCENT OR H.I.D. LIGHTING FIXTURE, WALL MOUNTED.
	INCANDESCENT, COMPACT FLUORESCENT, OR H.I.D. LIGHTING FIXTURE ON EMERGENCY CIRCUIT.
W	EXIT LIGHT, INDICATES DIRECTION OF ARROW
	EMERGENCY WALL PACK.
	H.I.D. LIGHTING FIXTURE, POLE MOUNTED.
$	SINGLE POLE SWITCH
$2	DOUBLE POLE SWITCH
$3	THREE WAY SWITCH
$4	FOUR WAY SWITCH
$x	OTHER SWITCHES: P – WITH PILOT LIGHT, K – KEY OPERATED, M – MOTOR RATED SWITCH, WP – WEATHER PROOF, T – TIMER
PE	PHOTO ELECTRIC RELAY
TC	TIME CLOCK. VERIFY TYPE FROM PLANS.
LC	LIGHTING CONTACTOR.
J	CONDUIT JUNCTION BOX
F	MOTOR, NUMBER INDICATES H.P.
(X)	SURFACE METAL RACEWAY WITH RECEPTACLE AT X" O.C.
2 GFI	DUPLEX RECEPTACLE, 2 INDICATES CIRCUITING, GFI INDICATES GROUND FAULT CIRCUIT INTERRUPTION
	FOURLEX RECEPTACLES
	SINGLE RECEPTACLE
	SPECIAL PURPOSE RECEPTACLE, AS NOTED
	DUPLEX RECEPTACLE MOUNTED 6" ABOVE COUNTER BACKSPLASH.
	DATA OUTLET
IC	INTERCOM
	SPLIT TELEPNONE DATA OUTLET
	TELEPHONE OUTLET
	PANELBOARD – CONCEALED
	PANELBOARD SURFACE MOUNTED
HH	HANDHOLE WITH DESIGNATION P – POWER, C – CONTROL, S – SIGNAL, MH – MAN HOLE, V – VAULT
	ELECTRIC HEATER WALL OR BASEBOARD
PFR	PHASE FAIL RELAY & FUSE
RTM	RUN TIME METER
CNT	START COUNT METER
	BLOWN FUSE INDICATOR
	NORMALLY OPEN CONTACT. (WHEN DE-ENERGIZED)
	NORMALLY CLOSED CONTACT. HANDHOLE (WHEN DE-ENERGIZED)
K	KIRK KEY INTERLOCK

SYMBOL	DESCRIPTION
	CONDUIT CONCEALED
	CONDUIT EXPOSED.
	CONDUIT REMOVED
E	EXISTING CONDUIT ROUTED UNDERGROUND.
	MANUFACTURERS CORD/CABLE
	CONDUIT WITH FLEX CONNECTION
	HEAT TAPE ON PIPING.
	CONDUIT TURNED UP OR TOWARD.
	CONDUIT TURNED DOWN OR AWAY.
	CONDUIT CAPPED.
A	CONDUIT SEALS. CLASS 1. DIV.1 EXPLOSION PROOF
A	PROVIDE CONDUIT SEALS PER NEC
L-7	CONDUIT HOME RUN Ø"C, 2#12 & 1#12 GND. TO PANEL L, CKT. 7 UNLESS SHOWN OTHERWISE.
C10	CONDUIT RUN – SEE CONDUIT SCHEDULE.
30 / 2	THERMAL MAGNETIC CIRCUIT BREAKER, RATING/NO. POLES MO – MAGNETIC ONLY
SA	SURGE ARRESTOR
	ATS – AUTOMATIC TRANSFER SWITCH MTS – MANUAL TRANSFER SWITCH
XKVAR	POWER CAPACITOR WITH KVAR RATING
MS 1	FULL VOLTAGE STARTER, NEMA SIZE 1 MS=MOTOR STARTER CONTACT BP=BYPASS CONTACTOR IC=ISOLATION CONTACTOR
	THERMAL OVERLOAD RELAY
VFD	VARIABLE FREQUENCY DRIVE
3	REDUCED VOLTAGE AUTO-TRANSFORMER STARTER NEMA SIZE 1
BP IC	SOLID STATE STARTER, REDUCED VOLTAGE WITH ISOLATION & BYPASS CONTACTORS
50A	FUSE WITH AMPERE RATING
AM AM AS	AM – AMMETER, VM – VOLT METER, AVM – AMMETER AND VOLT METER, AS – AMMETER SWITCH, PM – POWER MONITOR, VS – VOLTMETER SWITCH
	CONDUCTORS NOT CONNECTED.
	CONDUCTORS CONNECTED.
	PULL OUT SWITCH/PLUG-RECEPTACLE CONNECTION
	TERMINAL IN MCC
	TERMINAL IN MCP
	TERMINAL IN REMOTE DEVICE OR PANEL

ABBREVIATIONS

A,AMP	AMPERE
AC	AIR COMPRESSOR, ALTERNATING CURRENT
AF	AMPERE FRAME.
AFF	ABOVE FINISHED FLOOR
AI	ANALOG INPUT POINT (PLC)
AIC	AMPERES INTERRUPTING CAPACITY
AIL	AMBER INDICATING LIGHT
AL	ALARM
ALT	ALTERNATOR
AM	AMMETER
AO	ANALOG OUTPUT POINT (PLC)
AT	AMPERE TRIP
ATS	AUTOMATIC TRANSFER SWITCH
BAT	BATTERY
BC	BATTERY CHARGER
BCP	BOTTOM CONTROL PANEL
BH	BLOCK HEATER
BIL	BLUE INDICATING LIGHT
BP	BYPASS CONTRACTOR
C	CONDUIT, CONTROL
CAP	CAPACITOR
CB	CIRCUIT BREAKER
CKT	CIRCUIT
CNT	START COUNTER
CONT	CONTINUED
CP	CONTROL PANEL
CPT	CONTROL POWER TRANSFORMER
CR	CONTROL RELAY
CT	CURRENT TRANSFORMER
CV	CHECK VALVE
DB	DIRECT BURIED
DEM	DEMAND
DF	DEMAND FACTOR
DI	AC DIGITAL INPUT POINT (PLC)
DO	AC DIGITAL OUTPUT POINT (PLC)
DWG	DRAWING
E,EXIST	EXISTING
EF	EXHAUST FAN
F	FUSED
FACP	FIRE ALARM CONTROL PANEL
FE	FLOW ELEMENT
FIT	FLOW INDICATING TRANSMITTER
FS	FLOW SWITCH
FT	FLOW TRANSMITTER
FVNR	FULL VOLTAGE NON-REVERSING
FVR	FULL VOLTAGE REVERSING
G,GND	GROUND
GEN	GENERATOR
GFI	GROUND FAULT INTERRUPTER
GIL	GREEN INDICATING LIGHT
GRS	GALVANIZED RIGID STEEL (CONDUIT)
H	HOT, HIGH, HAND
HH	HAND HOLE
HID	HIGH INTENSITY DISCHARGE
HOA	HAND OFF AUTO
HTR	HEATER
I	INTRUSION SWITCH
IC	ISOLATION CONTRACTOR
ISR	INTRINSICALLY SAFE RELAY
KI	KEY INTERLOCK
kVA	KILO VOLT AMPS
kVAR	KILO VOLT AMP REACTIVE
kVARH	KILOVAR HOUR
kW	KILOWATT
kWH	KILOWATT HOUR
L	LOW
LC	LIGHTING CONTACTOR
LCP	LOCAL CONTROL PANEL
LE	LEVEL ELEMENT
LIT	LEVEL INDICATING TRANSMITTER
LK	MOTOR LEAK DETECTOR
LS	LEVEL SWITCH
LSH	LEVEL SWITCH – HIGH
LSHA	LEVEL SWITCH – HIGH ALARM
LSL	LEVEL SWITCH – LOW
LSLA	LEVEL SWITCH – LOW ALARM
LT	LEVEL TRANSMITTER
LTG	LIGHTING
M	METER
MCC	MOTOR CONTROL CENTER
MCP	MAIN CONTROL PANEL
MCR	MASTER CONTROL RELAY
MFR	MANUFACTURER
MH	MANHOLE
MOV	MOTOR OPERATED VALVE
MS	MOTOR STARTER
MTS	MANUAL TRANSFER SWITCH
N	NEUTRAL
NC	NORMALLY CLOSED
NF	NON FUSED
NO	NORMALLY OPEN
OI	OPERATOR INTERFACE
OIT	OPERATOR INTERFACE TERMINAL
OHP	OVERHEAD POWER
OL	OVERLOAD RELAY
OT	OVER TEMP
P	POWER
P.S.	PUMP STATION
PB	PUSH BUTTON
PBL	PUSH BUTTON – LIGHTED
PE	PHOTO ELECTRIC RELAY
PFR	PHASE FAILURE RELAY
PIT	PRESSURE INDICATING TRANSMITTER
PLC	PROGRAMMABLE LOGIC CONTROLLER
PMD	POWER MONITORING DEVICE
PNL	PANEL
POT	POTENTIOMETER
PS	PRESSURE SWITCH
PT	POTENTIAL TRANSFORMER
PVC	POLY VINYL CHLORIDE (CONDUIT)
PVC/C	PVC COVERED GALVANIZED RIGID STEEL CONDUIT
RCP	REMOTE CONTROL PANEL
RHP	RADIANT HEAT PANEL
RIL	RED INDICATING LIGHT
RO	RUN – OFF
RTD	RESISTANCE TEMPERATURE DEVICE
RTM	RUN TIME METER
RV	REDUCED VOLTAGE
RVAT	REDUCED VOLTAGE AUTO TRANSFORMER STARTER
S	SIGNAL
SA	SURGE ARRESTOR
SE	SERVICE ENTRANCE
SHT	SHEET
SMP	SUMP PUMP
SS	STAINLESS STEEL
SSS	SOLID STATE STARTER
SV	SOLENOID VALVE
T	THERMOSTAT, TRANSFORMER
TC	TIME CLOCK
TCP	TOP CONTROL PANEL
TDOD	TIME DELAY ON DE-ENERGIZATION
TDOE	TIME DELAY ON ENERGIZATION
TDR	TIME DELAY RELAY
TEL	TELEPHONE
TNI	TELEPHONE NETWORK INTERFACE
TS	TEMPERATURE SWITCH
TSP	TWISTED SHIELDED PAIR
TST	TWISTED SHIELDED THREE CONDUCTOR (TRIAD)
TYP	TYPICAL
UH	UNIT HEATER
UPS	UNINTERRUPTIBLE POWER SUPPLY
V	VAULT
VB	VIBRATION RELAY
VFD	VARIABLE FREQUENCY DRIVE
W	WATT
WHM	WATT HOUR METER
WIL	WHITE INDICATING LIGHT
WP	WEATHER PROOF
WW	WASTE WATER
WWP	WASTE WATER PUMP
XFMR	TRANSFORMER
XP	EXPLOSION PROOF
ZS	LIMIT SWITCH

REFERENCE SYMBOLS

P1	POWER & CONTROL CONDUIT & WIRE TAG, SEE SCHEDULE
C1	CONTROL CONDUIT & WIRE TAG SEE SCHEDULE
S1	SIGNAL CONDUIT & WIRE TAG, SEE SCHEDULE
T1	TELEPHONE CONDUIT & WIRE TAG
SP01	SPARE CONDUIT
1	CONSTRUCTION NOTE
P-01	MECHANICAL EQUIP. DESIGNATION
PSL-101	INSTRUMENT DESIGNATION
XX,XXX AFC	AVAILABLE FAULT CURRENT. PROVIDE EQUIPMENT MEETING OR EXCEEDING THE CLOSEST UPSTREAM INDICATED AFC VALVE

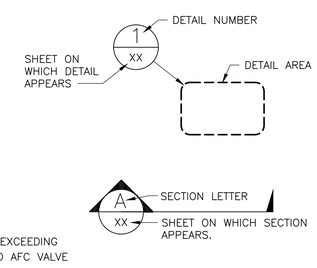

CASNE ENGINEERING, INC.
10604 NE 38th PL., SUITE 205
KIRKLAND, WA 98033
(425) 522-1000

WASHINGTON STATE DEPARTMENT OF FISH AND WILDLIFE

KENNETH L. ALBINGER, STATE OF WASHINGTON, 25469, REGISTERED PROFESSIONAL ENGINEER, 12/04/12

SYM	DATE	REVISION DESCRIPTION	BY

APPROVED AND RELEASED FOR CONSTRUCTION

CHIEF ENGINEER ..... DATE: .....

PROGRAM ..... DATE: .....

0 — 1"
BAR MEASURES ONE INCH ON ORIGINAL DRAWINGS

DESIGNED BY K. ALBINGER
CHECKED BY K. ALBINGER
DRAWN BY H. GIL
DATE 02/2012

KALAMA FALLS HATCHERY

MODROW TRAP MODIFICATIONS

SYMBOLS AND ABBRVIATIONS

PROJECT NO. 1021-008

SHEET 60 OF 63

12/4/12 12:55:05 HGG I:\021\10\1021-008 R2R WDW Kalama Fish Sorting_Drawings\1021-008E01.DWG

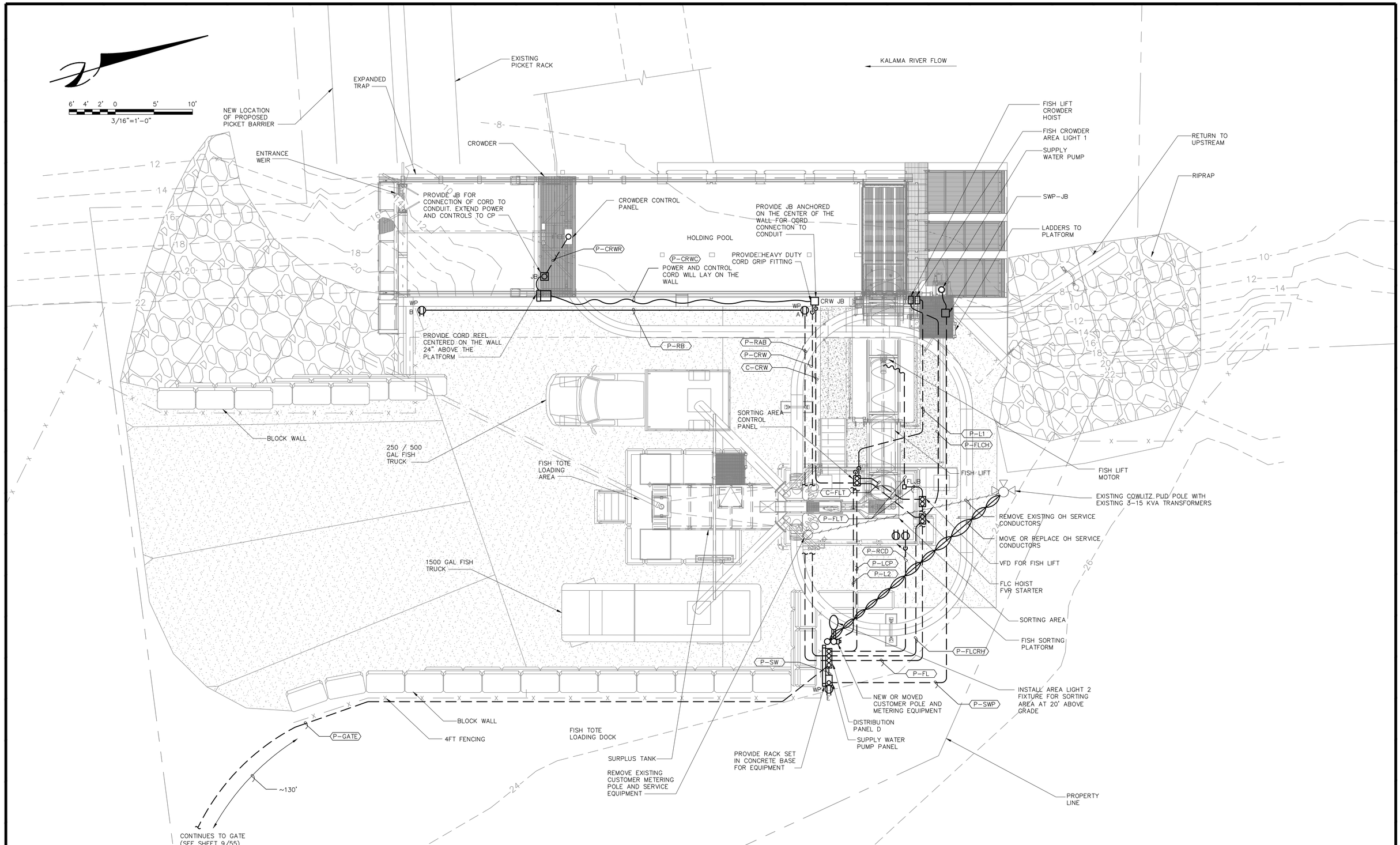

CASNE ENGINEERING, INC.
10604 NE 38th PL., SUITE 205
KIRKLAND, WA 98033
(425) 522-1000

WASHINGTON STATE DEPARTMENT OF FISH AND WILDLIFE

KENNETH L. ALBINGER — STATE OF WASHINGTON — 25469 — REGISTERED PROFESSIONAL ENGINEER — 12/04/12

SYM	DATE	REVISION DESCRIPTION	BY

APPROVED AND RELEASED FOR CONSTRUCTION

CHIEF ENGINEER ..... DATE: .....

PROGRAM ..... DATE: .....

0 — 1"
BAR MEASURES ONE INCH ON ORIGINAL DRAWINGS

DESIGNED BY K. ALBINGER
CHECKED BY K. ALBINGER
DRAWN BY H. GIL
DATE 02/2012

KALAMA FALLS HATCHERY

MODROW TRAP MODIFICATIONS
ELECTRICAL
POWER AND CONTROL PLAN

PROJECT NO. CZ:H28:11-1

SHEET 61 OF 63

I:\02\10\1021-008 R2R WDW Kalama Fish Sorting_Drawings\1021-008E02.dwg
12/4/12 12:54:06 HGG

MODROW TRAP DEMAND CALCULATIONS

LOAD DESCRIPTION	NOTES	HP	KVA	DEMAND DF	DEMAND KVA DEMAND
SUPPLY PUMP	FVNR	7.5	8.5	1.25	10.63
FISH LIFT DRIVE	VFD	5	5.7	1	5.70
FISH LIFT CROWDER HOIST	FVN	1.5	2.2	1	2.2
CROWDER DRIVE & HOIST		1.75	2.5	1	2.50
LIGHTING & RECEPTACLES			1.5	1	1.50
FUTURE LOADS			10	1	10.00
		HP	KVA		KVA
	TOTAL	15.25	29.8		32.6
					AMPS
AMPS AT 230 V 3 PHASE =					82

MODROW TRAP CONDUIT & WIRE SCHEDULE

IDENT	CONDUIT SIZE	CONDUIT TYPE	WIRE	FROM	TO	NOTES
GND	3/4	PVC	BARE #2/0 COPPER	SERVICE ENTRANCE DISCONNECT	STRUCT STEEL, WTR PIPE, GND ROD	BOND PER NEC 240 REQUIREMENTS
P-OHS	NONE			COWLITZ PUD SERVICE POLE	CUSTOMER POLE	
P-SERV	2"	GRS	3 # 2, # 2 N	CUSTOMER POLE WEATHERHEAD AT TOP	SERVICE ENTRANCE DISC/ METER	DISC & METER ON CUSTOMER POLE
P-PNL D	2"	GRS	3 # 2, # 2 N, # 8 G	SERVICE DISCONNECT	PANEL D	
P-CRW	1"		6 # 12, # 12 G	PANEL D	CRW JB	POWER
P-CRW C	NONE	NA	3 # 12, 10 # 14, # 12G	CRW JB	CORD REEL	POWER & CONTROL CORD
P-CRW R	1"	GRC	3 # 12, 10 # 14, # 12G	CORD REEEL JB	CROWDER P&CP	
P-FL	1"	PVC	4 # 12, # 10 G	PANEL D	FISH LIFT VFD	UNDERGROUND
P-FLT	1"	PVC	3 # 12, # 10 G	FISH LIFT VFD	FISH LIFT MOTOR	VIA FL JB
P-FLCH	1"	PVC	4 # 12, # 12 G	PANEL D	FVR STARTER	
P-FLCRH	1"	PVC	6 # 12, # 12 G	FVR STARTER	FISH LIFT CROWDER HOIST	
P-GATE	1"	PVC	2 # 12, # 12 G	PANEL D	SECURITY GATE	
P-SW	1"	PVC	4 # 10 , # 10 G	PANEL D	SUPPLY WATER PUMP PANEL	
P-SWP	1"	PVC	4 # 10 , # 10 G	SUPPLY WATER PUMP PANEL	SUPPLY WATER PUMP	
P-RAB	3/4"		4 # 12, # 12 G	PANEL D	RECEPTACLE A	
P-RB	3/4"		2 # 12, # 12 G	RECEPTACLE A	RECEPTACLE B	
P-RCD	3/4"		4 # 12, # 12 G	PANEL D	RECEPTACLES C & D	
P-RE	3/4"		2 # 12, # 12 G	PANEL D	RECEPTACLE E	
P-LCP	3/4"	PVC	4 # 12, # 12 G	PANEL D	SORTING AREA CONTROL PANEL	
P-L1	3/4"	PVC	2 # 12, # 12 G	SORTING AREA CONTROL PANEL	LIGHT FIXTURE	
P-L2	3/4"	PVC	2 # 12, # 12 G	SORTING AREA CONTROL PANEL	LIGHT FIXTURE	
C-CRW	1"	PVC	10 # 14	CRW JB	SORTING AREA CP	
C-FLT	1"	PVC	10 # 14	FISH LIFT VFD	SORTING AREA CP	
C-FLCRH	1"	PVC	8 # 14	FVR STARTER	SORTING AREA CP	
C-GATE	1"	PVC	12 # 14	SECURITY GATE	GATE CONTROL POST	
S-GATE	3/4"	GRC	1 TSP # 18	SECURITY GATE	EXIT LOOP	

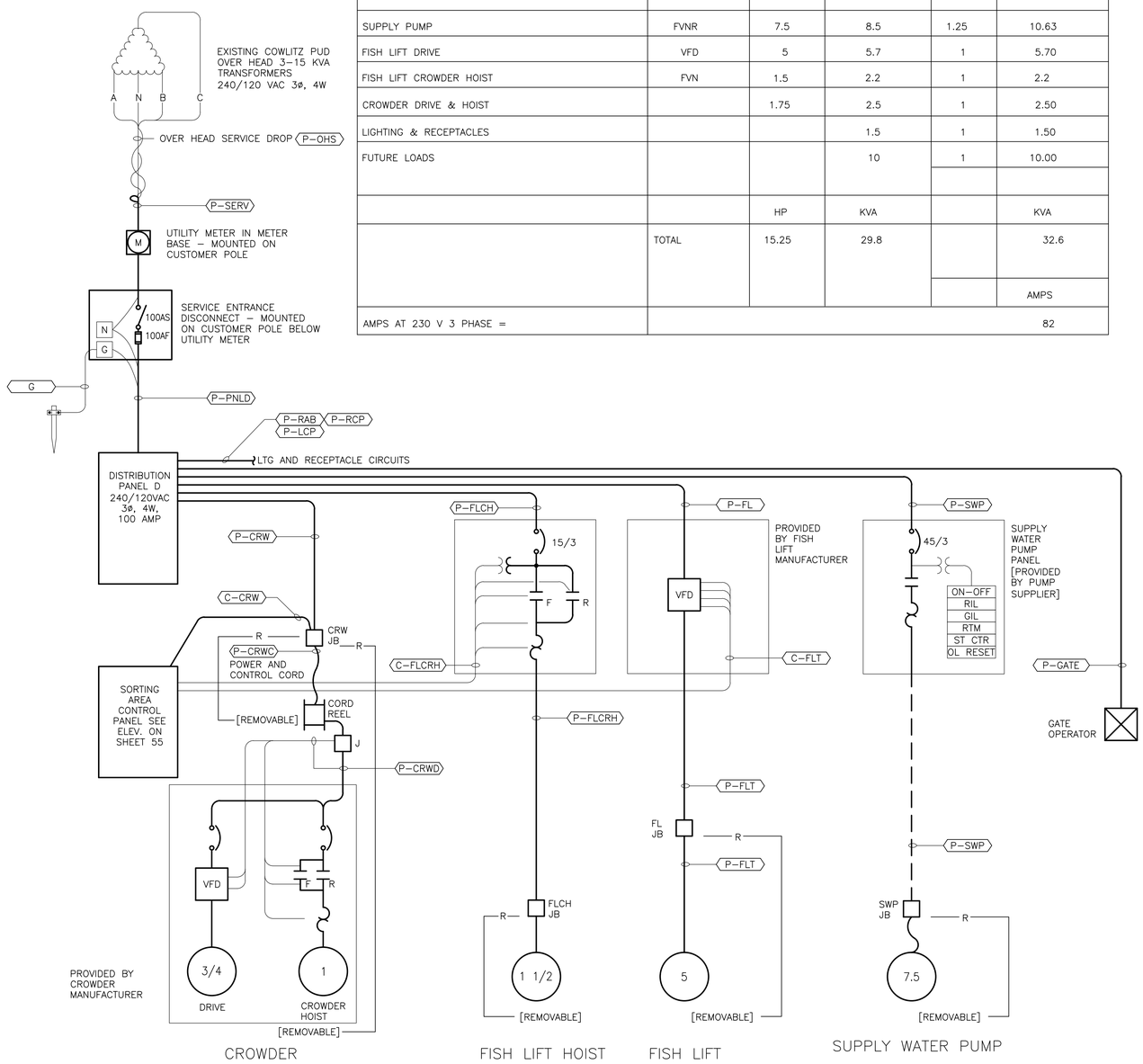

PANEL: D — NEW
VOLT: 230/120 — SURFACE MOUNTED
BUS: AMP 100 — 22,000 KAIC
MAIN LUGS ONLY 100 AMP, 3P — NEMA 3R ENCLOSURE
FED FROM: SERVICE DISCONNECT — JOB NUMBER 1021-008

DESCRIPTION	CKT	LOAD	NUM	KEY	BREAKER AMP	POLE	VA PER PHASE A	B	C	BREAKER POLE	AMP	KEY	NUM	LOAD	CKT	DESCRIPTION
FISH LIFT CROWDER HOIST	1	535		M	15	3	2435			3	30	M		1900	2	FISH LIFT
FISH LIFT CROWDER HOIST	3	535						2435						1900	4	FISH LIFT
FISH LIFT CROWDER HOIST	5	535							2435					1900	6	FISH LIFT
CROWDER	7	835		M	15	3	3670			3	45	M		2835	8	SUPPLY WATER PUMP
CROWDER	9	835						3670						2835	10	SUPPLY WATER PUMP
CROWDER	11	835							3670					2835	12	SUPPLY WATER PUMP
RECEPTACLE A	13	300		R	20	1	955			1	20	M		655	14	SECURITY GATE
RECEPTACLE B	15	300		R	20	1		600		1	15	L		300	16	FISH SORTING LIGHTING
RECEPTACLE C	17	300		R	20	1			600	1	15	L		300	18	CROWDING AREA LIGHTING
RECEPTACLE D	19	300		R	20	1	300			1	15				20	SPARE
SPARE	21				20					1	15				22	SPARE
SPARE	23				20					1	15				24	SPARE
SPARE	25				20	3				1	20				26	SPARE
SPARE	27									1	20				28	SPARE
SPARE	29									1	20				30	SPARE
							7360	6705	6705							

M: MOTOR LOAD — N: NO CALCULATION/ INTERLOCKED
S: SUBFED LOAD — L: LIGHTING LOAD — O: OTHER
R: RECEPTACLE LOAD — K: KITCHEN LOAD

PANEL: LUGGED LOAD
DOWNSTREAM SUBFED AND PANEL LOAD
TOTAL PANEL LOAD 20770

LOAD TYPE	DEMAND FACTOR	CONNECTED	DEMAND	REPORT TOTALS	
L- GENERAL LIGHTING LOAD	125 %	600	750	9.0	% MAX PHASE IMBALANCE
R- RECEPTACLE LOAD (PER NEC ART. 220-13)		900	900	20.8	TOTAL CONNECTED kVA
M- MOTOR LOADS	100 %	18315	18315	51.9	TOTAL CONNECTED AMPS
K- KITCHEN RECEPTACLES AT %	%		2125	4.1	25% OF LARGEST MOTOR AMPS
O- ALL OTHER LOADS	100 %		22090	55.0	TOTAL DEMAND kVA /AMPS

LIGHTING FIXTURE SCHEDULE

TYPE	DESCRIPTION	LAMP TYPE	MOUNTING	CATALOG #
L1	STANCHION MOUNTED STRAIGHT TYPE FIXTURE FOR SUPPORT ON THE 1 1/2" GRS VERTICAL CONDUIT. METAL HALIDE LAMP AND BALLAST FOR OUTDOOR WET LOCATION, NEMA 4. PROVIDE GLOBE AND GUARD AND CONICAL REFLECTOR	175 MH	STANCHION MOUNTING	COPPER CROUSE HINDS VMVMP-175GP-RD70
L2	POLE MOUNTED AREA LIGHT. 400W METAL HALIDE, WITH PULSED START. PROVIDE BRONZE PAINTED HOUSING WITH HARDWARE FOR TREATED WOOD POLE MOUNTING. TYPE IV OR FORWARD THROW LIGHT DISTRIBUTION. POWER AT 240VAC. PROVIDE A HOUSE SHIELD TO SHIELD THE LOCAL RESIDENT.	400W PSMH-PULSED START	WOOD POLE AT 20'-0" ABOVE GRADE	GARDCO G18-1-4XL-400PSMH-240-BRP-HS.

CASNE ENGINEERING, INC.
10604 NE 38th Pl., SUITE 205
KIRKLAND, WA 98033
(425) 522-1000

WASHINGTON STATE
DEPARTMENT OF FISH AND WILDLIFE

KENNETH L. ALBINGER — STATE OF WASHINGTON — 25469 — REGISTERED PROFESSIONAL ENGINEER — 12/04/12

SYM	DATE	REVISION DESCRIPTION	BY

APPROVED AND RELEASED FOR CONSTRUCTION
CHIEF ENGINEER ..... DATE: .....
PROGRAM ..... DATE: .....

0 — 1"
BAR MEASURES ONE INCH ON ORIGINAL DRAWINGS

DESIGNED BY K. ALBINGER
CHECKED BY K. ALBINGER
DRAWN BY H. GIL
DATE 02/2012

KALAMA FALLS HATCHERY
MODROW TRAP MODIFICATIONS
ELECTRICAL
ONE LINE DIAGRAM

PROJECT NO. 1021-008
SHEET 62 OF 63

12/4/12 12:41:33 HGG
I:\D2\10\1021-008 R2R WDW Kalama Fish Sorting_Drawings\1021-008E03.DWG

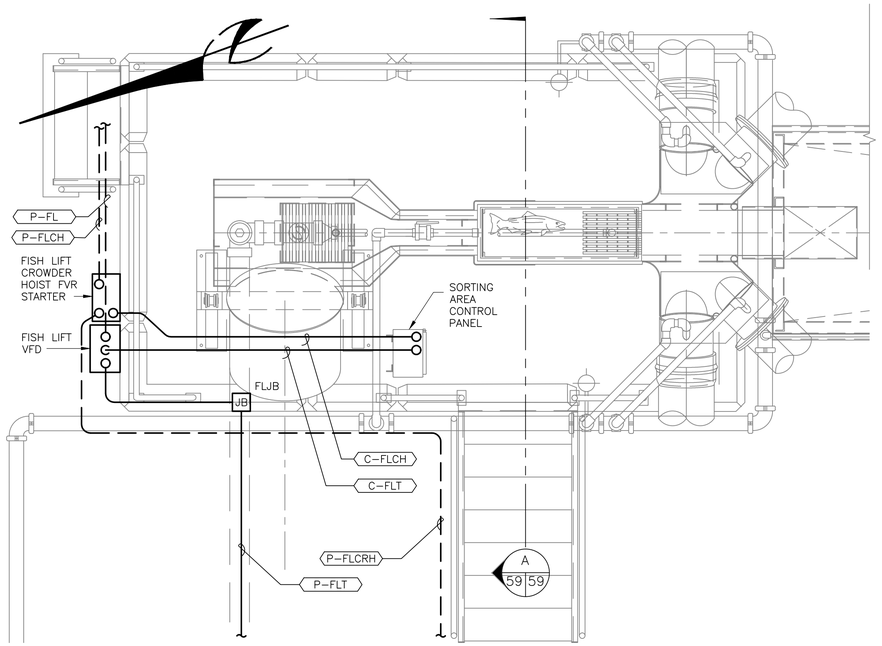

FISH LIFT TRANSITION / EA BASKET / SORTING TABLE PLAN (1 / 58 59)
SCALE: 1/2" = 1'-0"

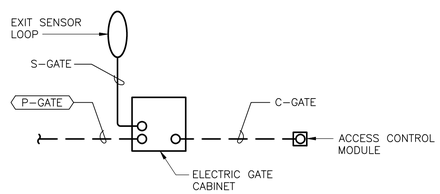

ELECTRIC GATE OPERATOR
SCALE: N.T.S

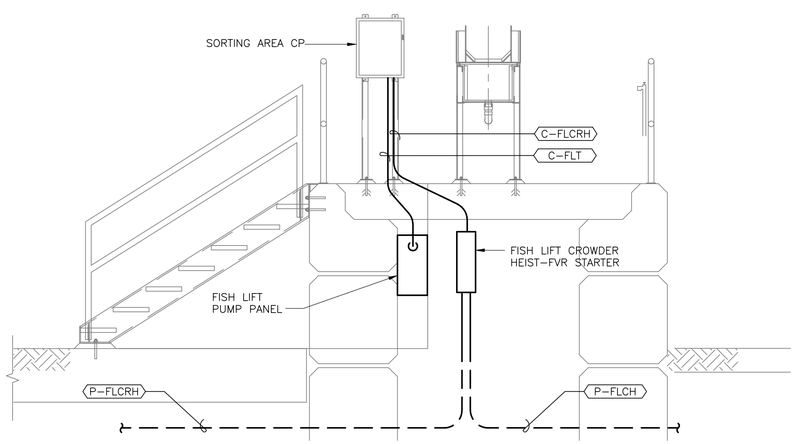

SECTION (A / 59 59)
SCALE: 1/2" = 1'-0"

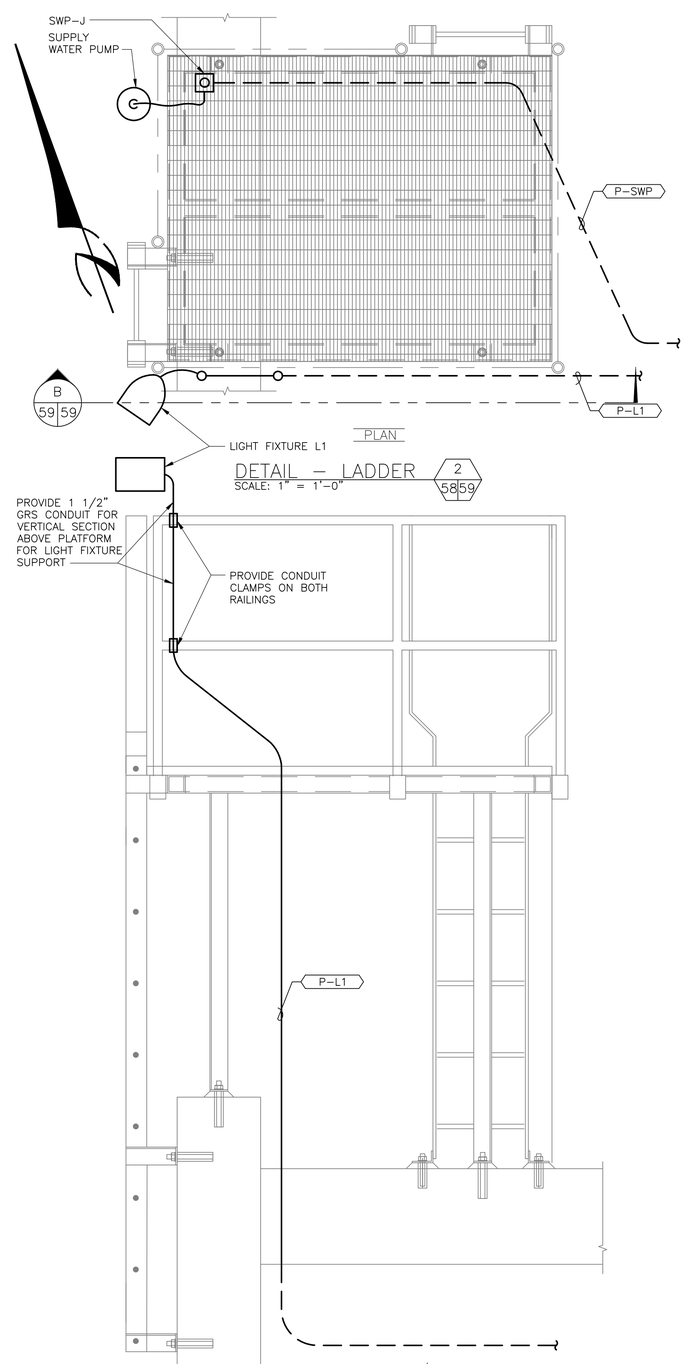

PLAN

DETAIL – LADDER (2 / 58 59)
SCALE: 1" = 1'-0"

SECTION (B / 59 59)
SCALE: 1" = 1'-0"

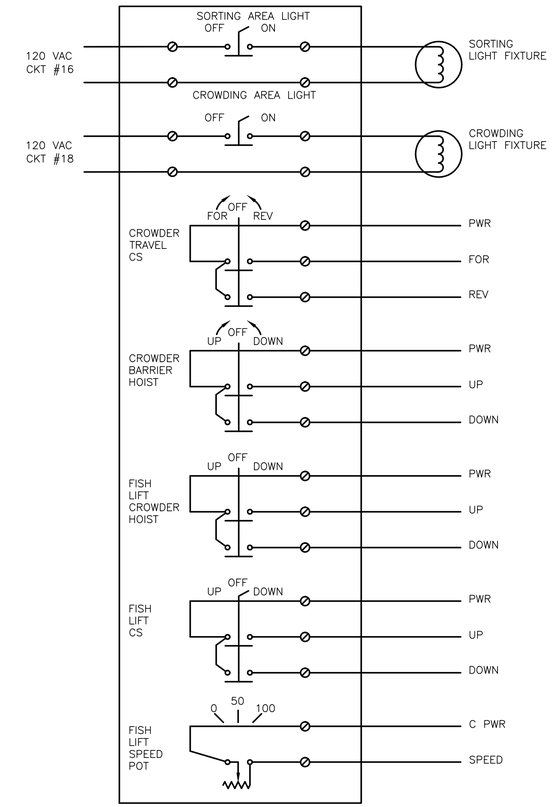

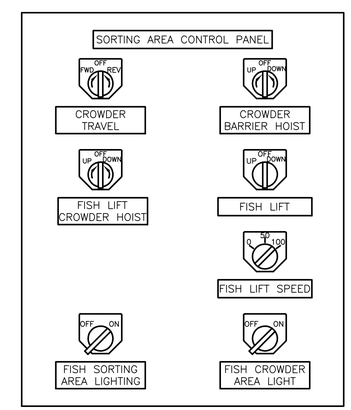

SORTING AREA CP
INNER DOOR ELEVATION
SCALE: 3"=1'-0" (NEMA 4 ENCLOSURE)

I:\D2\10\1021-008 R2R WDW Kalama Fish Sorting_Drawings\1021-008E04.dwg
12/4/12 12:37:16 HGG

CASNE ENGINEERING, INC.
10604 NE 38th PL., SUITE 205
KIRKLAND, WA 98033
(425) 522-1000

WASHINGTON STATE
DEPARTMENT OF FISH AND WILDLIFE

KENNETH L. ALBINGER, STATE OF WASHINGTON, 25469, REGISTERED PROFESSIONAL ENGINEER
12/04/12

SYM	DATE	REVISION DESCRIPTION	BY

APPROVED AND RELEASED FOR CONSTRUCTION
CHIEF ENGINEER ..... DATE: .....
PROGRAM ..... DATE: .....

0 — 1"
BAR MEASURES ONE INCH ON ORIGINAL DRAWINGS

DESIGNED BY K. ALBINGER
CHECKED BY K. ALBINGER
DRAWN BY H. GIL
DATE 02/2012

KALAMA FALLS HATCHERY
MODROW TRAP MODIFICATIONS
ELECTRICAL
DETAILS

PROJECT NO. CZ:H28:11-1
SHEET 63 OF 63