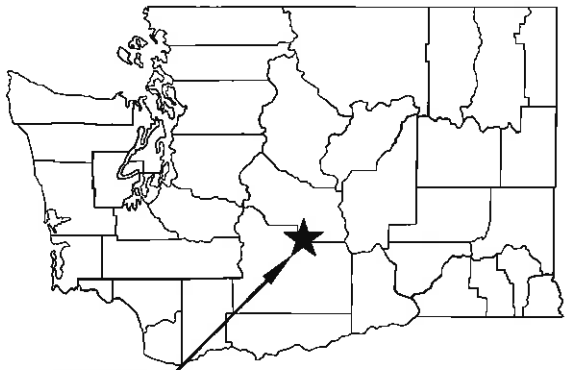

STATE MAP
NOT TO SCALE

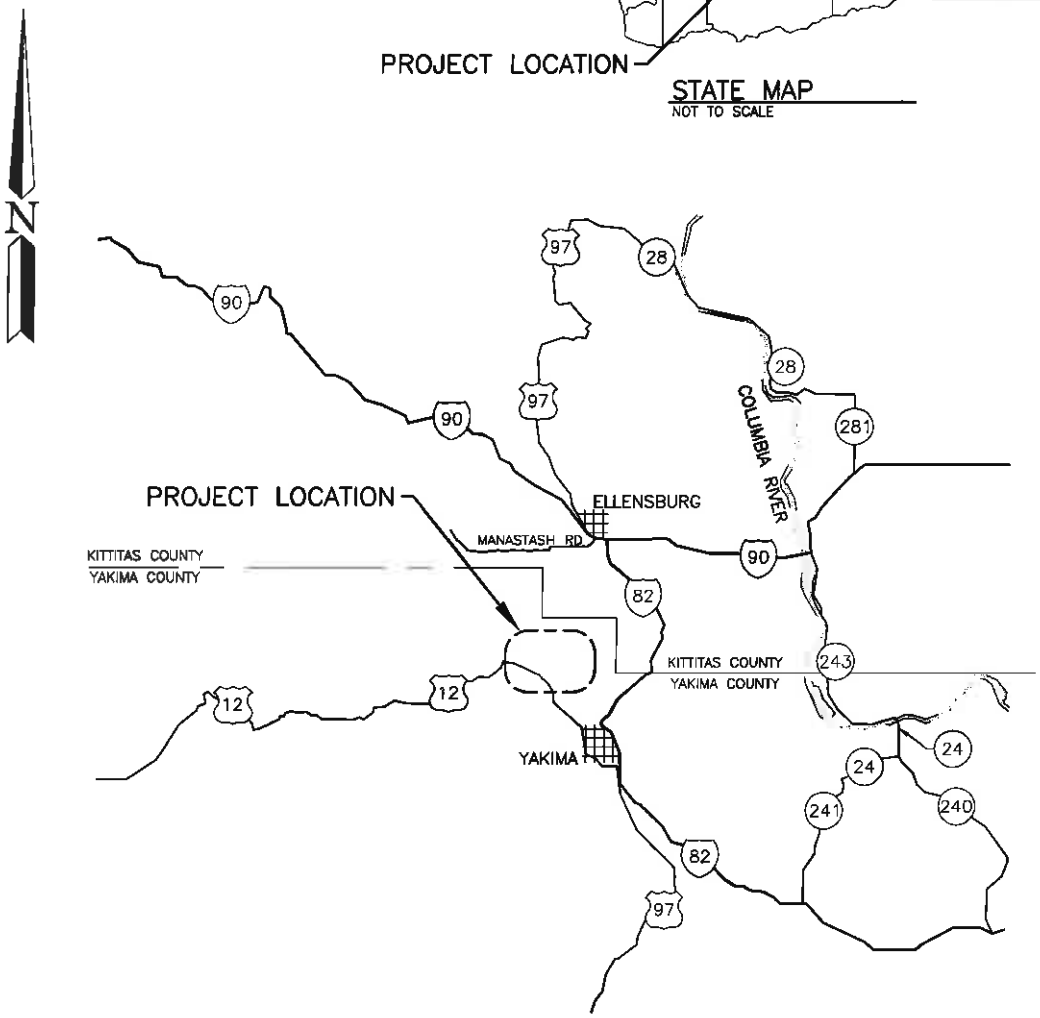

VICINITY MAP
NOT TO SCALE

TOWNSHIP 15, RANGE 17E,
SECTION 1, 2, 3, 11, 12,

TOWNSHIP 15, RANGE 18E,
SECTION 6, 7

TOWNSHIP 16, RANGE 17E,
SECTION 34, 35

WASHINGTON STATE
DEPARTMENT OF FISH AND WILDLIFE

DESIGNED BY R. BERG
DRAWN BY N. WHITE
DATE 11-26-2013
FILE NAME R03131c001.DWG

APPROVED BY

WENAS WILDLIFE AREA

WENAS WLA ELK FENCE REPLACEMENT
STATE AND VICINITY MAP

PROJECT NO.
YA:R3:13-1

SHEET 1 OF 10

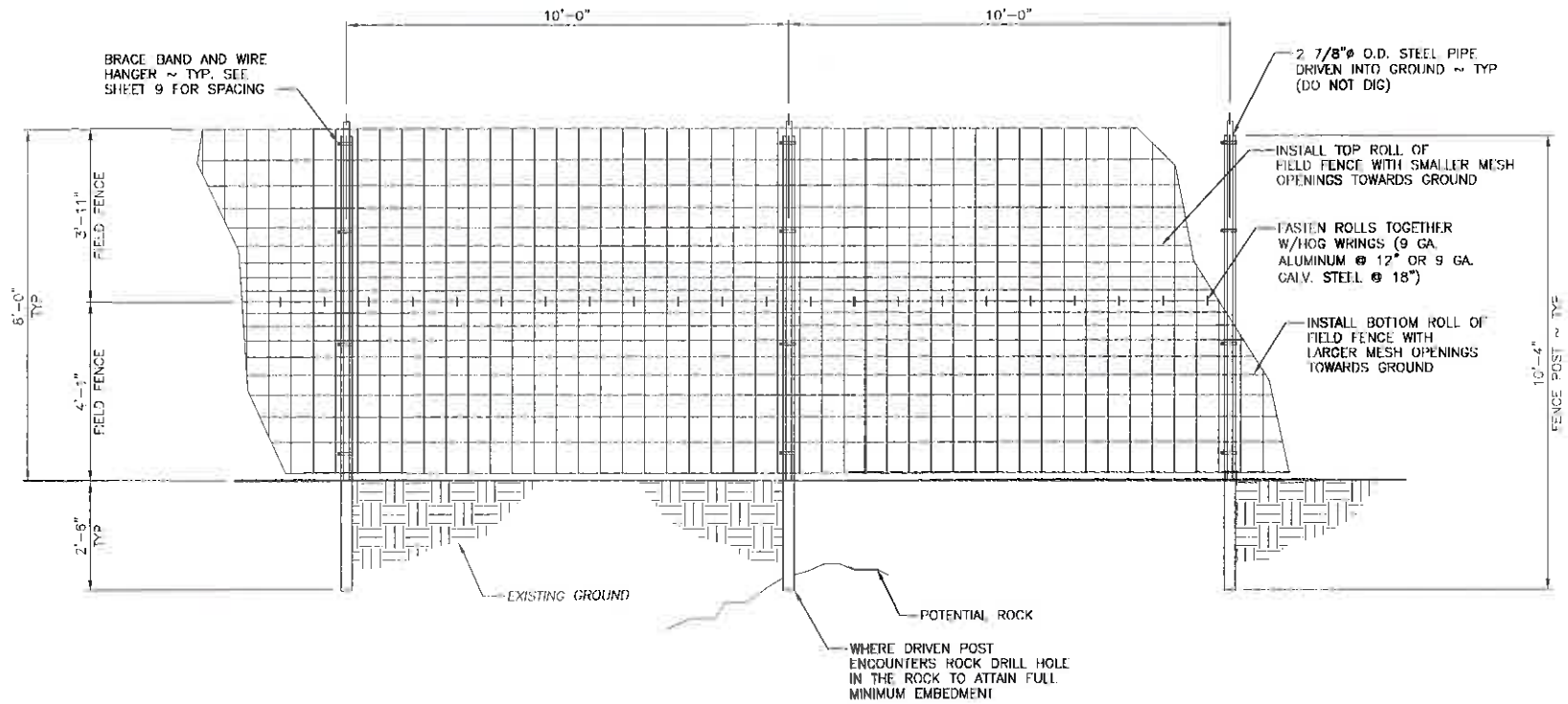

STEEL POST ELK FENCE

SCALE: 1/4" = 1'-0"

WASHINGTON STATE
DEPARTMENT OF FISH AND WILDLIFE

DESIGNED BY R. BERG DRAWN BY N. WHITE DATE 11-26-2013 FILE NAME R03131c002.DWG APPROVED BY	WENAS WILDLIFE AREA WENAS WLA ELK FENCE REPLACEMENT STEEL POST ELK FENCE	PROJECT NO. YA:R3:13-1 SHEET 2 OF 10

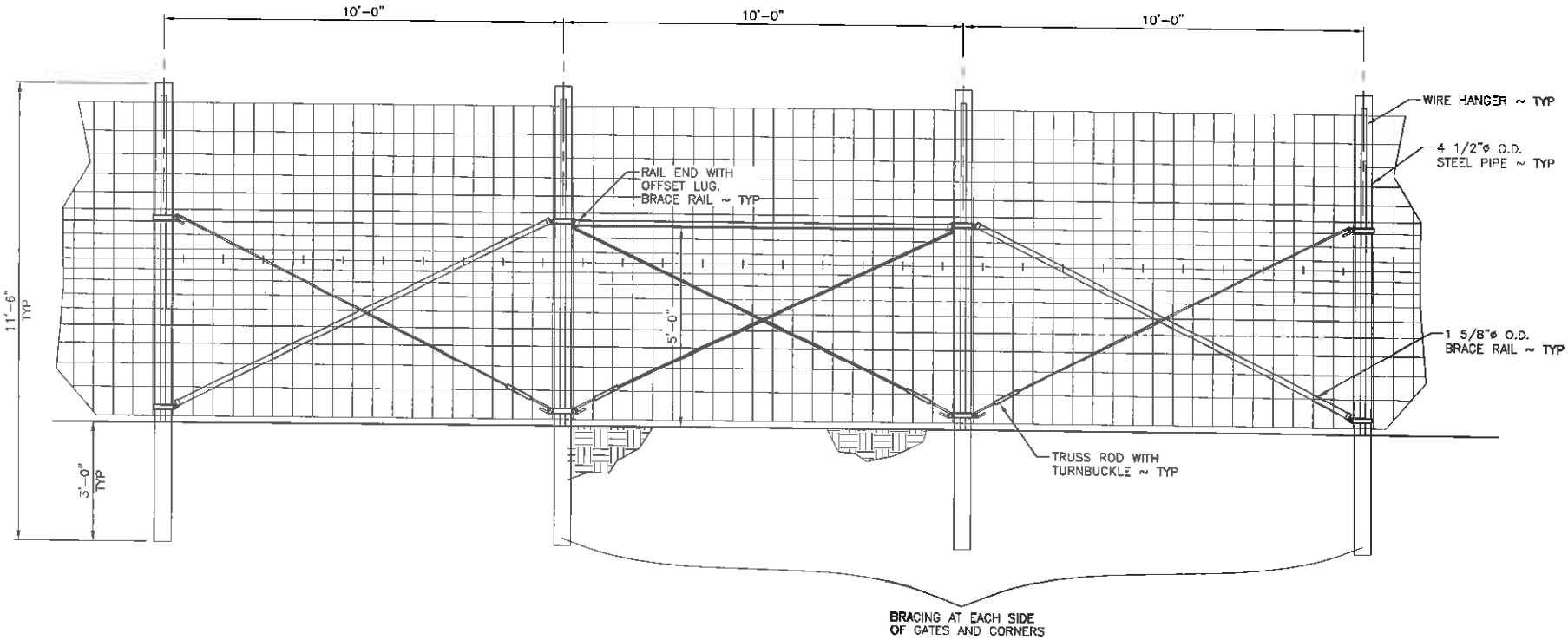

FENCE BRACE

SCALE: 3/8" = 1'-0"

NOTE:

1. BRACE AS SHOWN SHALL BE ERECTED IN FENCE LINE AT 650' SPACING MAXIMUM.

WASHINGTON STATE DEPARTMENT OF FISH AND WILDLIFE

DESIGNED BY R. BERG
DRAWN BY N. WHITE
DATE 11-28-2013
FILE NAME R03131c003.DWG
APPROVED BY

WENAS WILDLIFE AREA

WENAS WLA ELK FENCE REPLACEMENT

FENCE BRACE

PROJECT NO. YA:R3:13-1

SHEET 3 OF 10

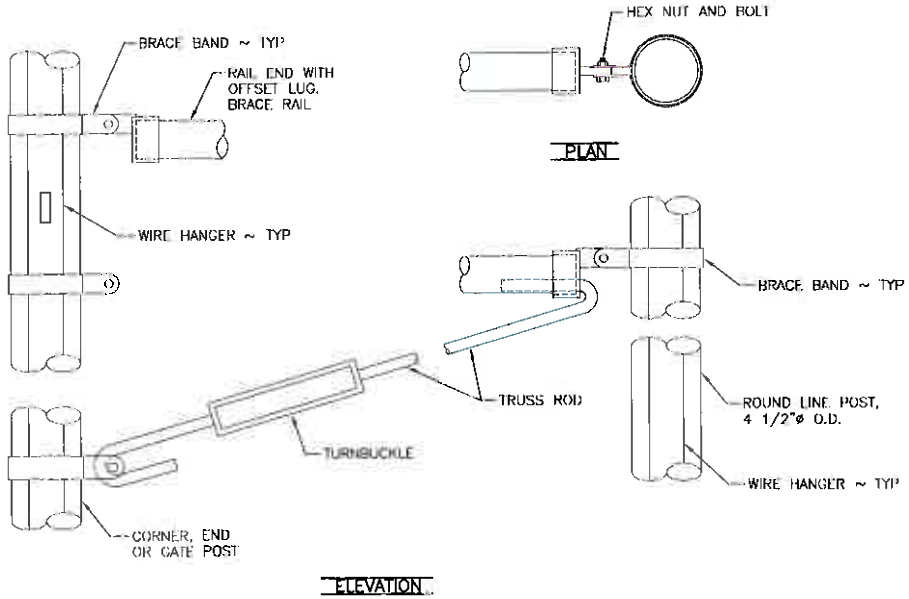

FENCE BRACE DETAILS

NOT TO SCALE

WASHINGTON STATE
DEPARTMENT OF FISH AND WILDLIFE

DESIGNED BY R. BERG DRAWN BY N. WHITE DATE 11-26-2013 FILE NAME R03131c004.DWG APPROVED BY	WENAS WILDLIFE AREA WENAS WLA ELK FENCE REPLACEMENT FENCE BRACE DETAILS	PROJECT NO. YA:R3:13-1 SHEET 4 OF 10

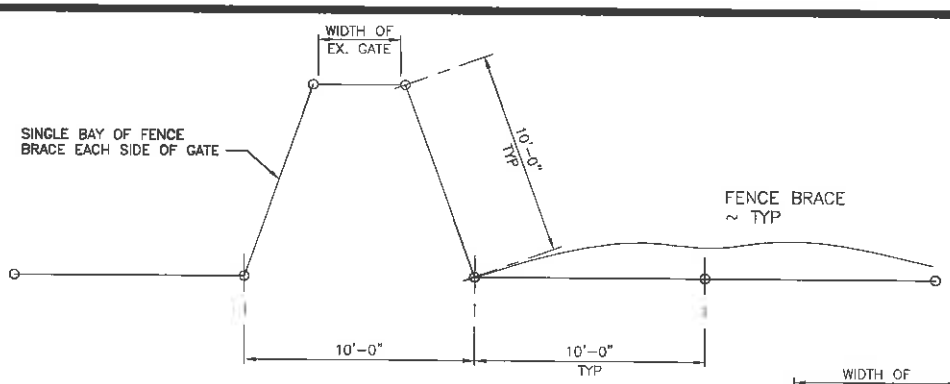

PLAN

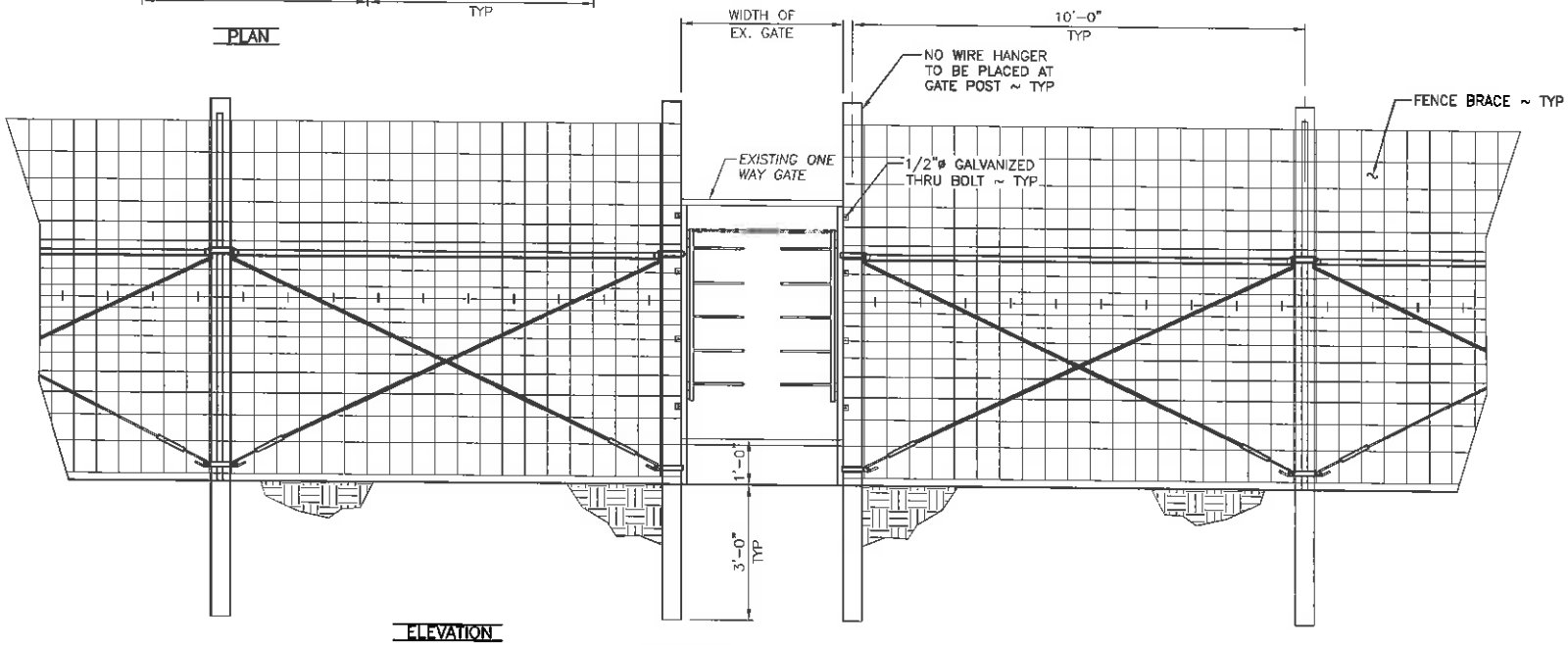

ELEVATION

ONE WAY GATE

SCALE: 3/8" = 1'-0"

WASHINGTON STATE DEPARTMENT OF FISH AND WILDLIFE

DESIGNED BY R. BERG
DRAWN BY N. WHITE
DATE 11-26-2013
FILE NAME R03131c005.DWG
APPROVED BY

WENAS WILDLIFE AREA

WENAS WLA ELK FENCE REPLACEMENT

ONE WAY GATE

PROJECT NO. YA:R3:13-1

SHEET 5 OF 10

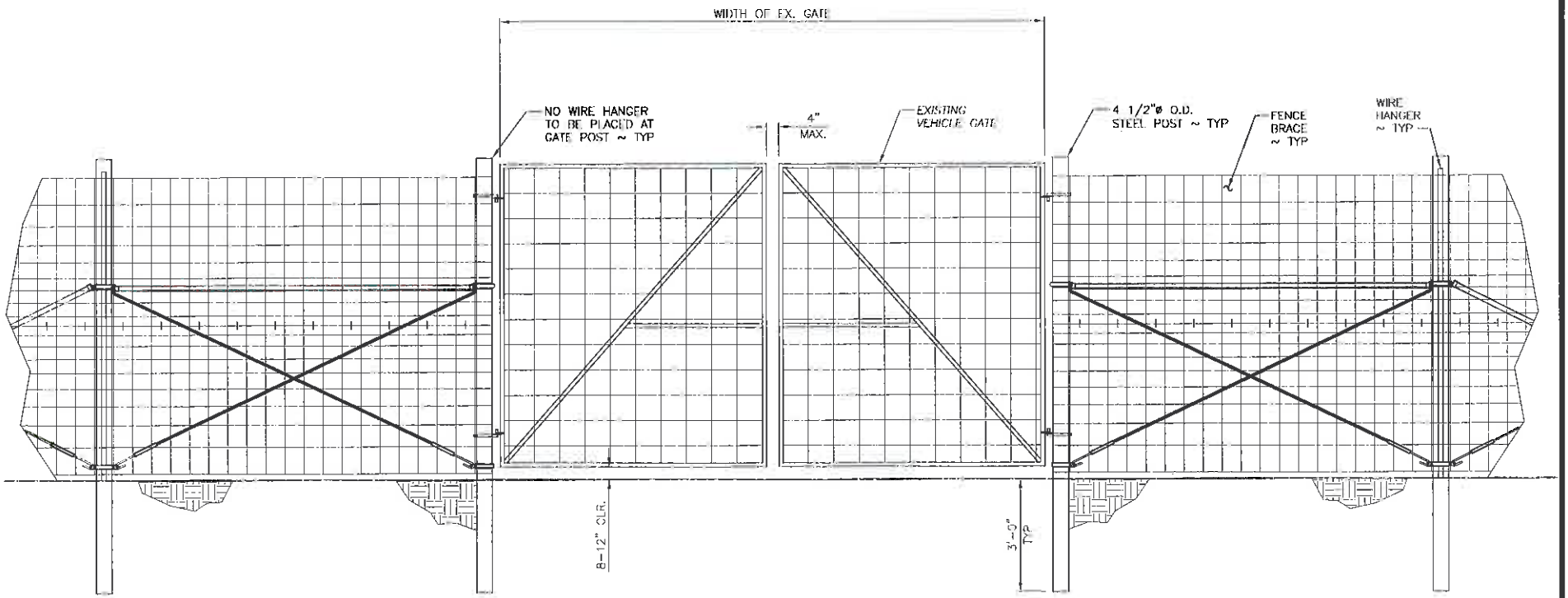

VEHICLE ACCESS GATE
SCALE: 3/8" = 1'-0"

WASHINGTON STATE
DEPARTMENT OF FISH AND WILDLIFE

DESIGNED BY R. BERG
DRAWN BY N. WHITE
DATE 11-26-2013
FILE NAME R003131c06.DWG
APPROVED BY

WENAS WILDLIFE AREA

WENAS WLA ELK FENCE REPLACEMENT

VEHICLE ACCESS GATE

PROJECT NO. YA:R3:13-1

SHEET 6 OF 10

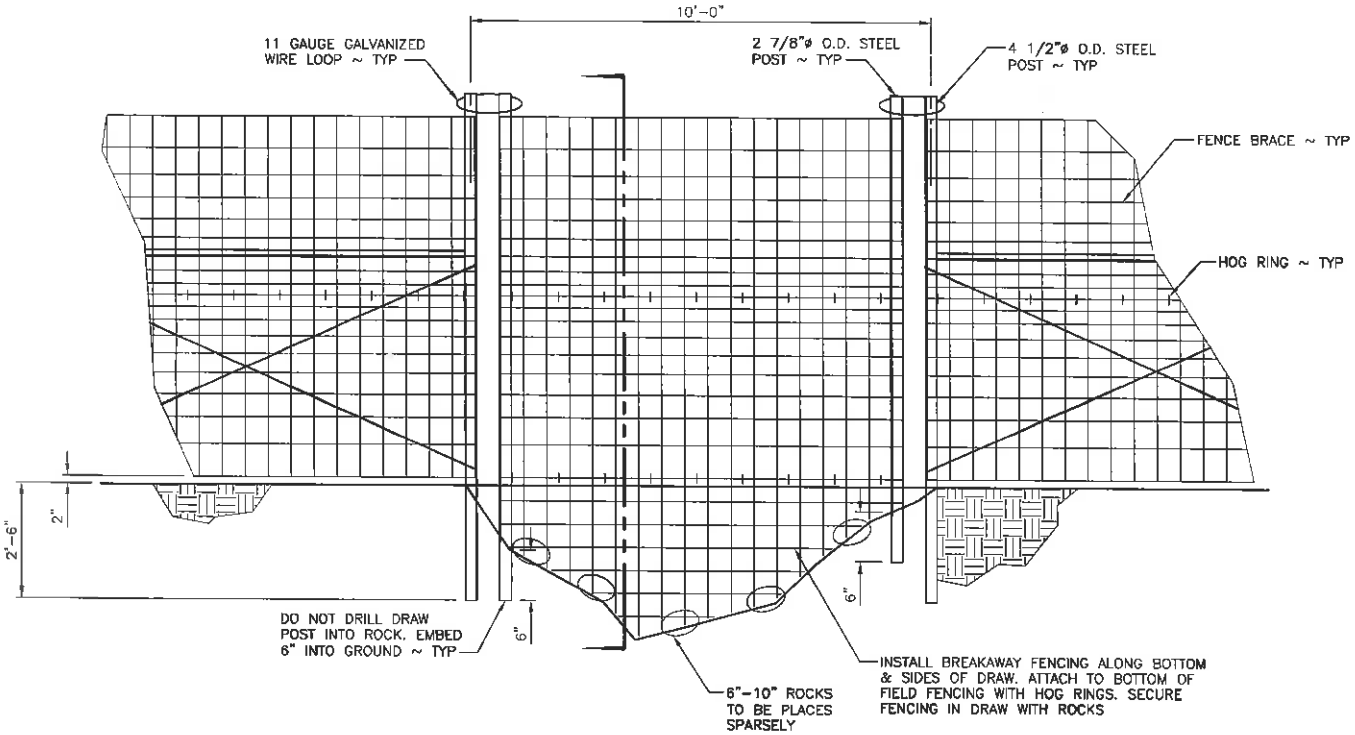

ELEVATION

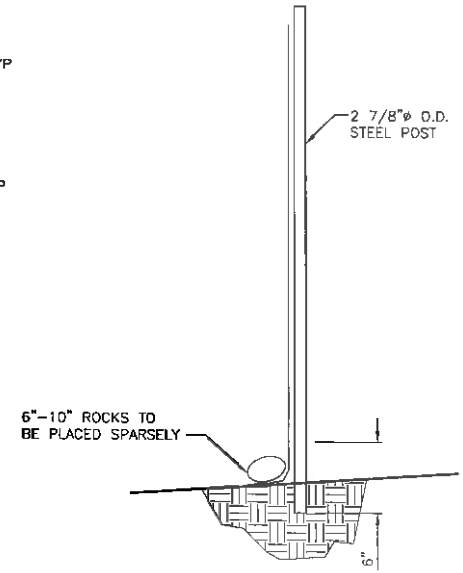

SECTION

SMALL DRAW FENCE

SCALE: 1/4" = 1'-0"

WASHINGTON STATE DEPARTMENT OF FISH AND WILDLIFE

DESIGNED BY R. BERG DRAWN BY N. WHITE DATE 11-26-2013 FILE NAME R03113c007.DWG APPROVED BY	WENAS WILDLIFE AREA WENAS WLA ELK FENCE REPLACEMENT SMALL DRAW CROSSING DRAW LESS THAN 10' ACROSS	PROJECT NO. YA:R3:13-1 SHEET 7 OF 10

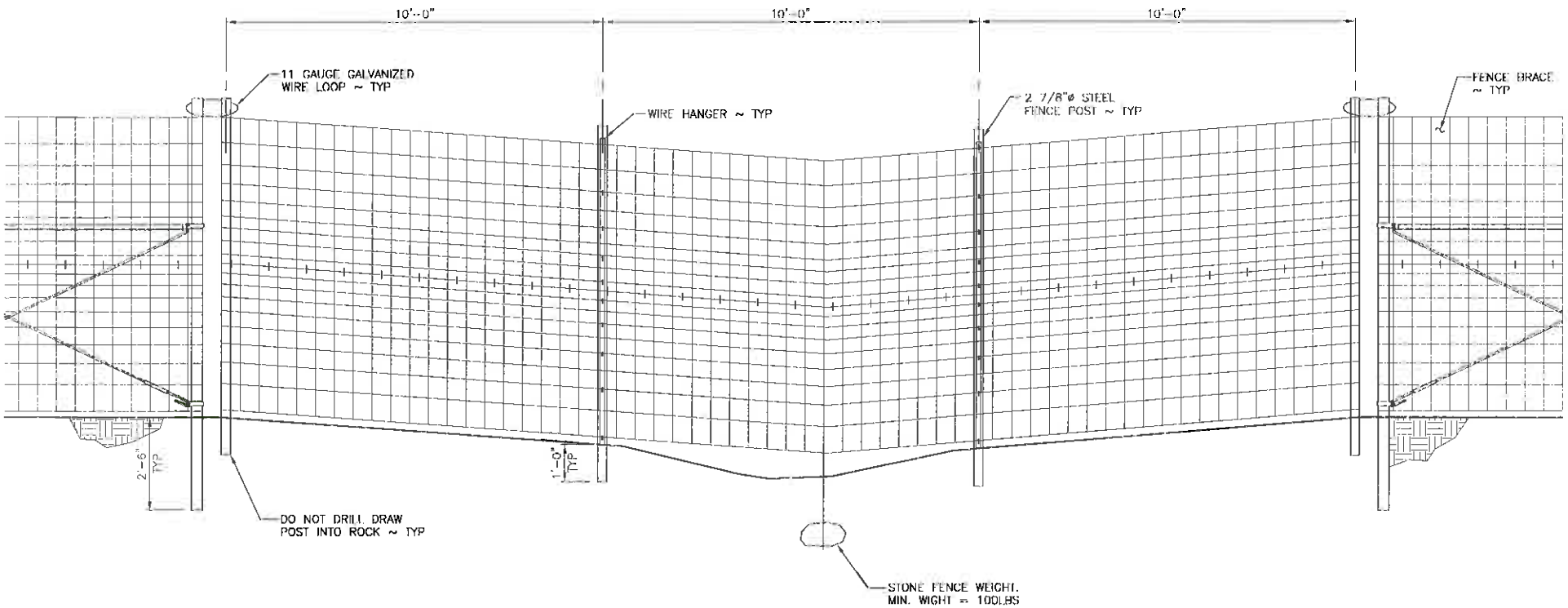

LARGE DRAW FENCE

SCALE: 1/4" = 1'-0"

WASHINGTON STATE DEPARTMENT OF FISH AND WILDLIFE

DESIGNED BY R. BERG DRAWN BY N. WHITE DATE 11-26-2013 FILE NAME R03131c008.DWG APPROVED BY	WENAS WILDLIFE AREA WENAS WLA ELK FENCE REPLACEMENT LARGE DRAW FENCE DRAW MORE THAN 10' ACROSS	PROJECT NO. YA:R3:13-1 SHEET 8 OF 10

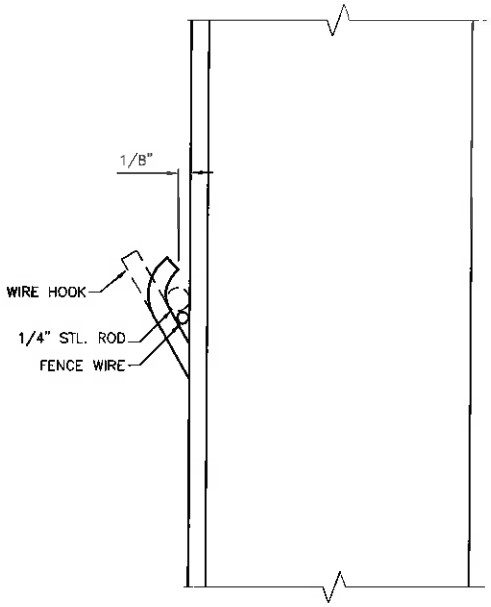

DETAIL 1/9 9
SCALE: 6" = 1'-0"

NOTE:

INSERT 1/4" STEEL ROD BEHIND WIRE HOOK. POUND WIRE HOOK TO ENCLOSE FENCE WIRE. THEN REMOVE ROD.

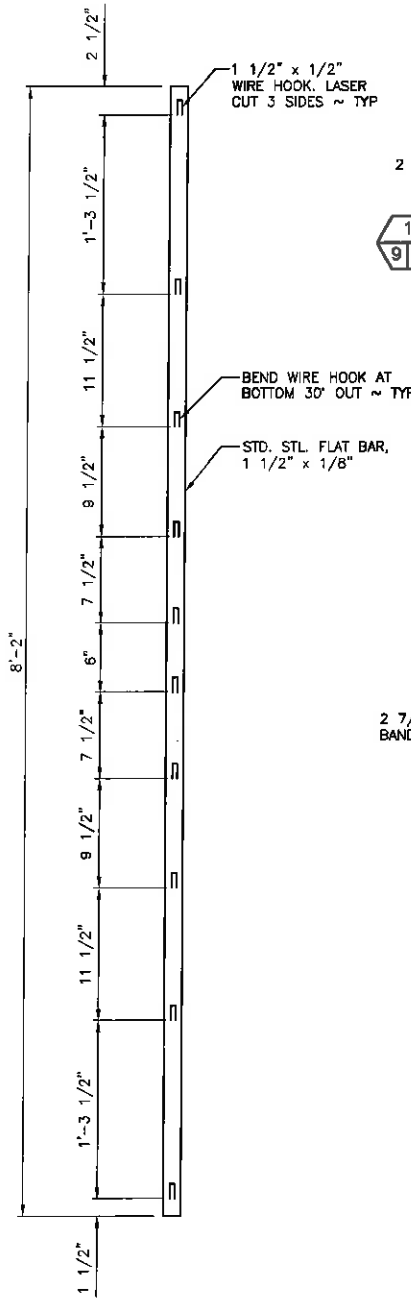

WIRE HANGER
SCALE: 3/4" = 1'-0"

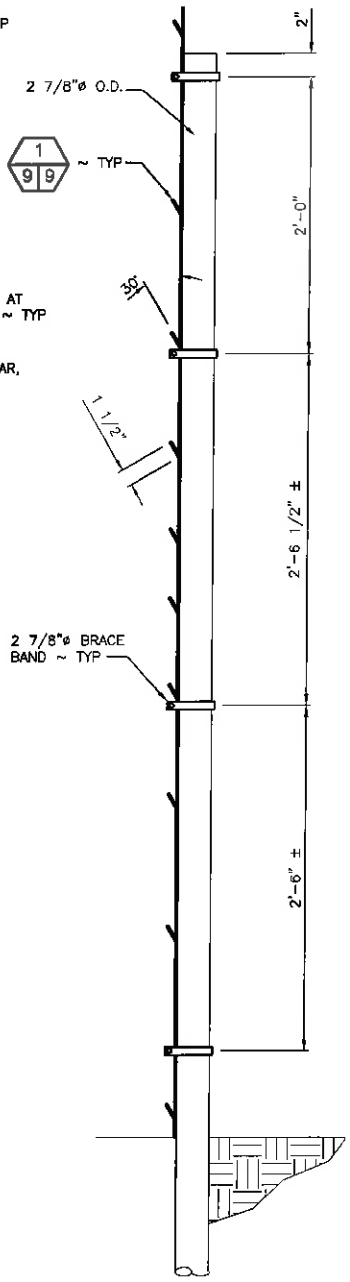

BRACE BAND ASSEMBLY
SCALE: 3/4" = 1'-0"

WASHINGTON STATE
DEPARTMENT OF FISH AND WILDLIFE

DESIGNED BY R. BERG DRAWN BY N. WHITE DATE 11-26-2013 FILE NAME R03131c010.DWG APPROVED BY	WENAS WILDLIFE AREA WENAS WLA ELK FENCE REPLACEMENT FENCE WIRE HANGER DETAILS	PROJECT NO. YA:R3:13-1 SHEET 9 OF 10

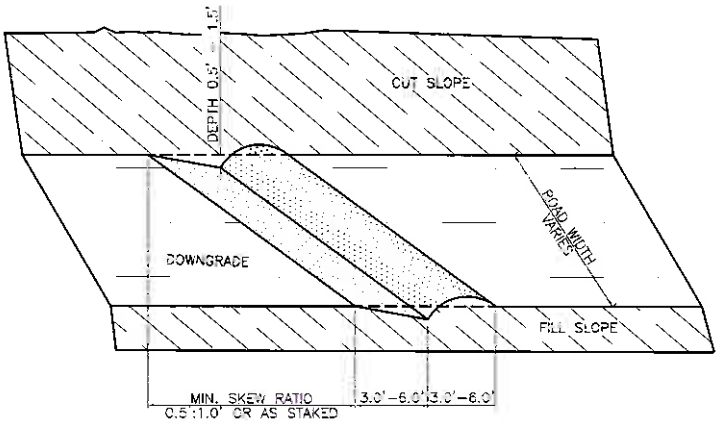

WATER BAR

NOT TO SCALE

WATER BAR NOTES:

1. ALL WATER BARS SHALL BEGIN AT THE INTERSECTION OF THE TRAIL AND CUT SLOPE THEN RUN ACROSS THE ENTIRE WIDTH OF THE TRAIL.
2. ALL WATER BARS SHALL HAVE FREE FLOWING OUTLETS.
3. WHEN STAKES ARE USED, THEY DESIGNATE THE OUTLET LOCATION.
4. WATER BAR SPACING–

   AT LESS THAN 5% SLOPE – 125'
   BETWEEN 5% AND 10% – 80'
   BETWEEN 10% AND 20% – 50'
   GREATER THAN 20% – 30'

5. WATER BARS SHALL BE MINIMUM 3' FROM FENCE POSTS.

WASHINGTON STATE
DEPARTMENT OF FISH AND WILDLIFE

DESIGNED BY R. BERG DRAWN BY N. WHITE DATE 11-26-2013 FILE NAME R03131c010.DWG APPROVED BY	WENAS WILDLIFE AREA WENAS WLA ELK FENCE REPLACEMENT WATER BAR DETAIL	PROJECT NO. YA:R3:13-1 SHEET 10 OF 10

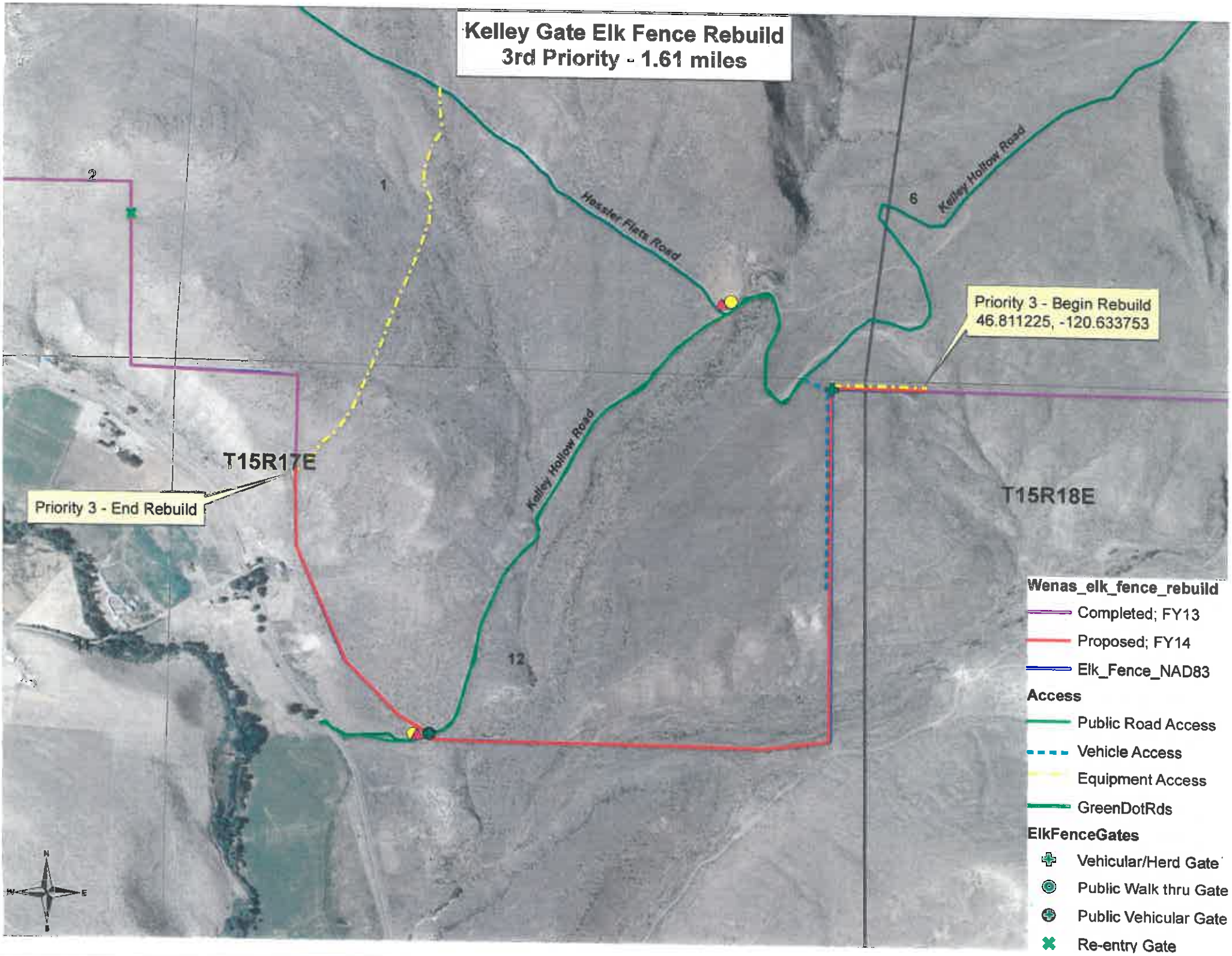
Kelley Gate Elk Fence Rebuild
3rd Priority - 1.61 miles
Hessler Flats Road
Kelley Hollow Road
Kelley Hollow Road
Priority 3 - Begin Rebuild
46.811225, -120.633753
Priority 3 - End Rebuild
T15R17E
T15R18E
1
2
6
12
Wenas_elk_fence_rebuild
Completed; FY13
Proposed; FY14
Elk_Fence_NAD83
Access
Public Road Access
Vehicle Access
Equipment Access
GreenDotRds
ElkFenceGates
Vehicular/Herd Gate
Public Walk thru Gate
Public Vehicular Gate
Re-entry Gate

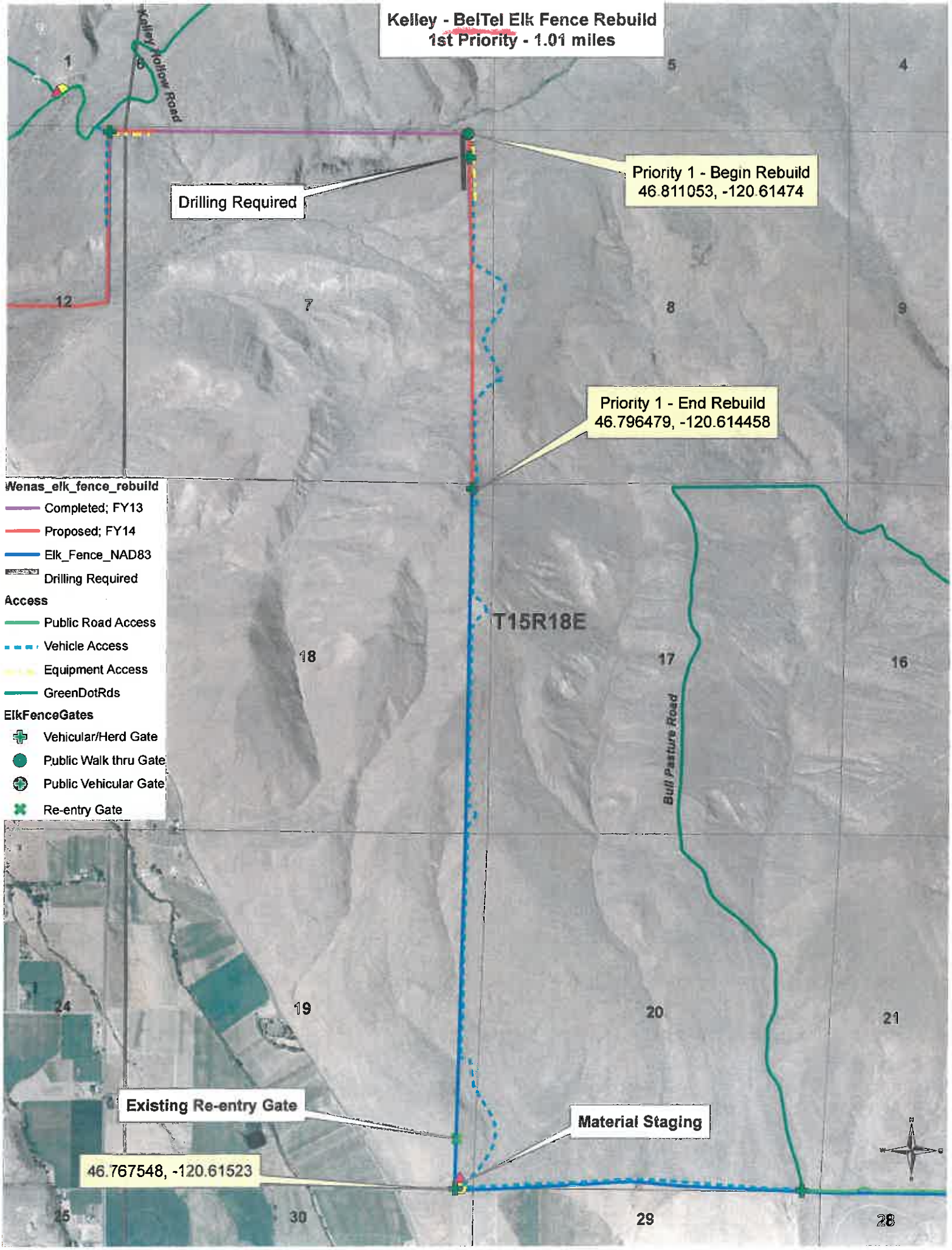
Kelley - BelTel Elk Fence Rebuild
1st Priority - 1.01 miles
Kelley Hollow Road
Drilling Required
Priority 1 - Begin Rebuild
46.811053, -120.61474
Priority 1 - End Rebuild
46.796479, -120.614458
Wenas_elk_fence_rebuild
Completed; FY13
Proposed; FY14
Elk_Fence_NAD83
Drilling Required
Access
Public Road Access
Vehicle Access
Equipment Access
GreenDotRds
ElkFenceGates
Vehicular/Herd Gate
Public Walk thru Gate
Public Vehicular Gate
Re-entry Gate
T15R18E
Bull Pasture Road
Existing Re-entry Gate
Material Staging
46.767548, -120.61523
1
6
5
4
12
7
8
9
18
17
16
24
19
20
21
25
30
29
28

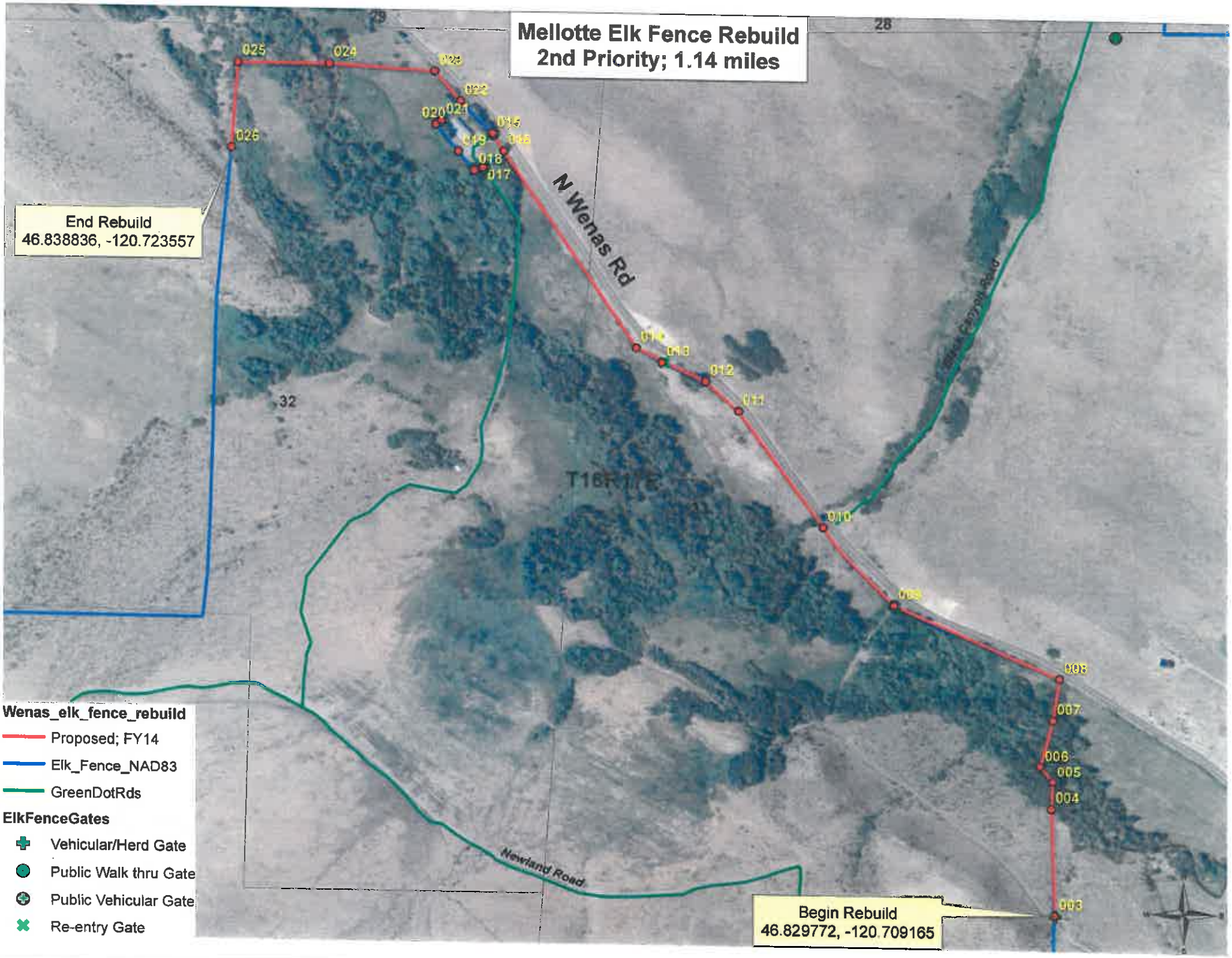

Mellotte Elk Fence Rebuild
2nd Priority; 1.14 miles
End Rebuild
46.838836, -120.723557
Begin Rebuild
46.829772, -120.709165
N Wenas Rd
Newland Road
T16R17E
Wenas_elk_fence_rebuild
Proposed; FY14
Elk_Fence_NAD83
GreenDotRds
ElkFenceGates
Vehicular/Herd Gate
Public Walk thru Gate
Public Vehicular Gate
Re-entry Gate

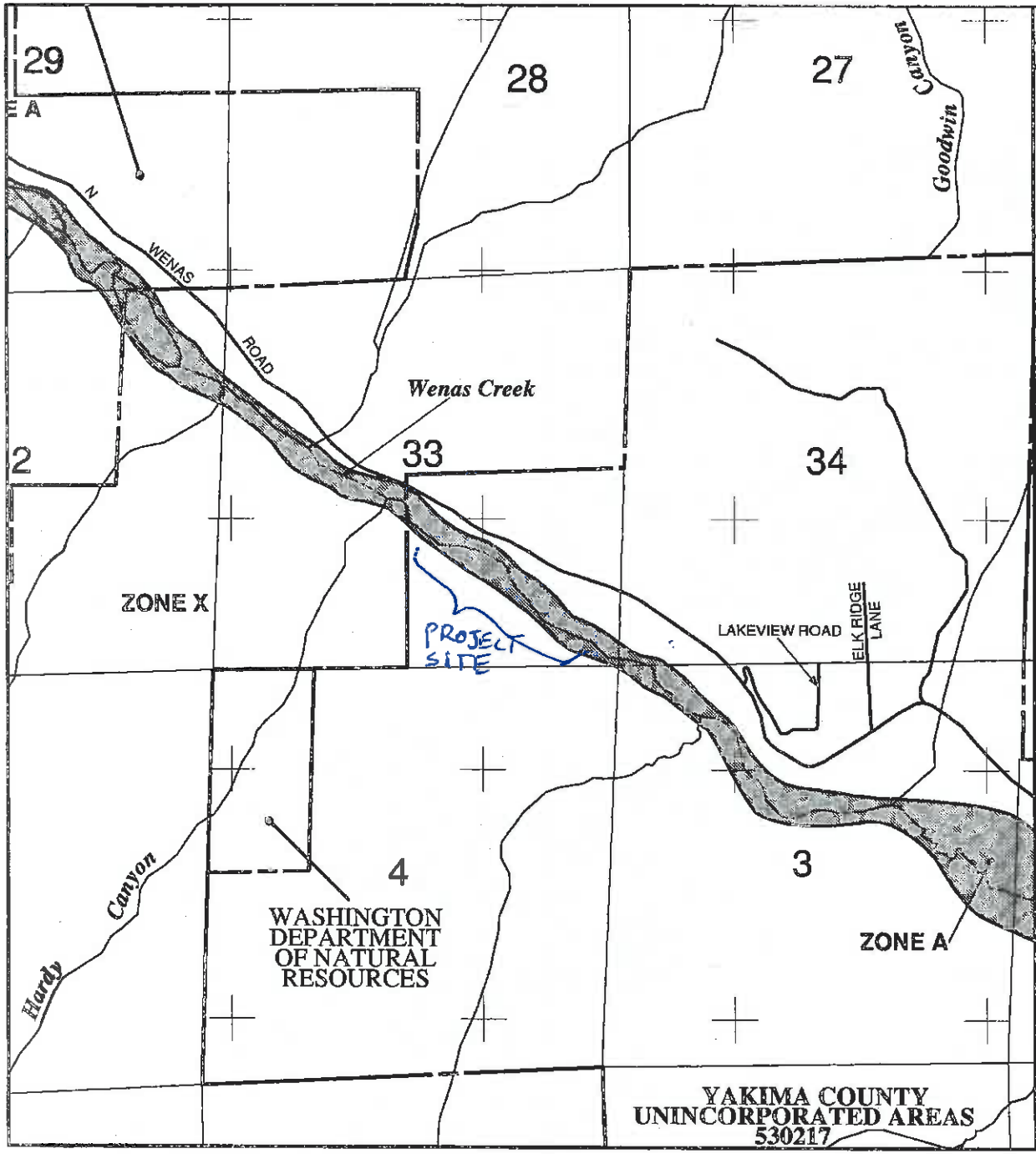

ice is available in this community, contact your insurance
d Insurance Program at 1-800-638-6620.

FLOOD MAP

MAP SCALE 1" = 2000'

MELLOTTE ELK FENCE REBUILD

0 600 1200

NATIONAL FLOOD INSURANCE PROGRAM

PANEL 0500D

FIRM

FLOOD INSURANCE RATE MAP

YAKIMA COUNTY, WASHINGTON

AND INCORPORATED AREAS

PANEL 500 OF 2700

(SEE MAP INDEX FOR FIRM PANEL LAYOUT)

CONTAINS:

COMMUNITY	NUMBER	PANEL	SUFFIX
YAKIMA COUNTY	530217	0500	D

Notice to User: The **Map Number** shown below should be used when placing map orders; the **Community Number** shown above should be used on insurance applications for the subject community.

MAP NUMBER
53077C0500D

EFFECTIVE DATE
NOVEMBER 18, 2009

Federal Emergency Management Agency

This is an official copy of a portion of the above referenced flood map. It was extracted using F-MIT On-Line. This map does not reflect changes or amendments which may have been made subsequent to the date on the title block. For the latest product information about National Flood Insurance Program flood maps check the FEMA Flood Map Store at www.msc.fema.gov