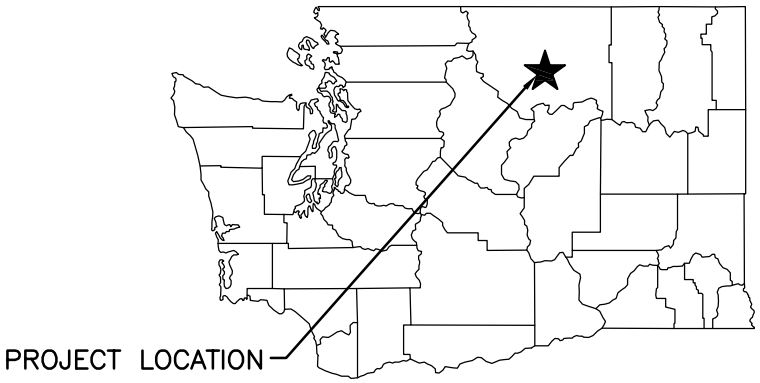

STATE MAP
NOT TO SCALE

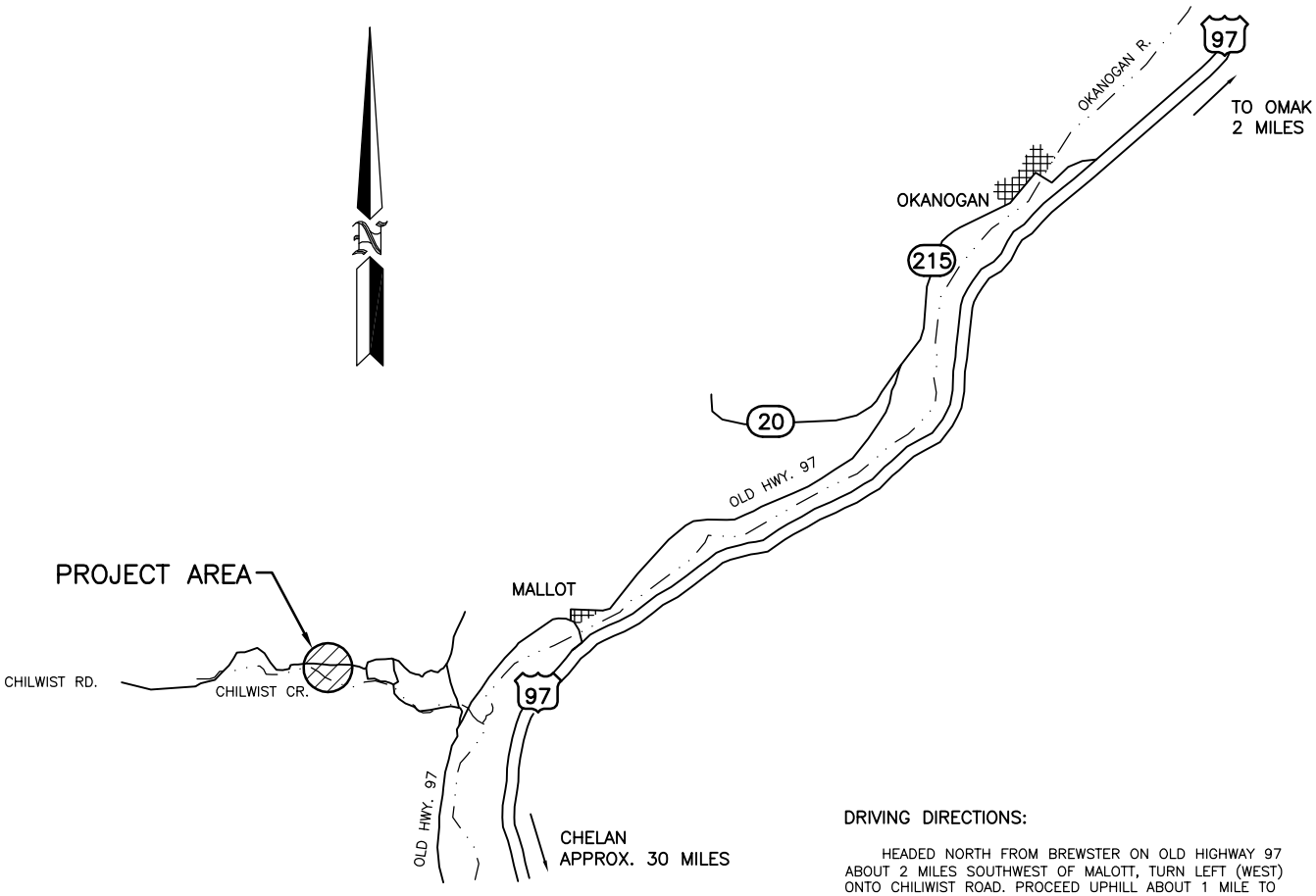

VICINITY MAP
NOT TO SCALE

DRIVING DIRECTIONS:

HEADED NORTH FROM BREWSTER ON OLD HIGHWAY 97 ABOUT 2 MILES SOUTHWEST OF MALOTT, TURN LEFT (WEST) ONTO CHILIWIST ROAD. PROCEED UPHILL ABOUT 1 MILE TO THE CHILIWIST WILDLIFE AREA

HEADED SOUTH FROM MALOTT ON OLD HIGHWAY 97 ABOUT 2 MILES SOUTWEST OF MALOTT, TURN RIGHT (WEST) ONTO CHILIWIST ROAD. PROCEED UPHILL ABOUT 1 MILE TO THE CHILIWIST WILDLIFE AREA.

ENG. PROJECT NO. ON:R2:12-6

PORTION OF: SECT. 13, T 32 N, R 24 E

REFERENCE NUMBER:

APPLICANT:
WASHINGTON DEPT. of FISH & WILDLIFE
600 CAPITOL WAY N.
OLYMPIA, WA 98501-1091

ADJACENT PROPERTY OWNER:
1.
2

PROJECT LOCATION (ADDRESS):
CHILWIST WILDLIFE AREA

LAT/LONG: LAT: 48.2748/LONG: 119.7738
DATUM: NAVD 88
SHEET 1 OF 18 DATE: 11/27/2013

PROPOSED PROJECT:
FISH PASSAGE BARRIER REMOVAL,
STREAM RESTORATION,
& IRRIGATION EFFICIENCIES

IN: CHILIWIST CREEK
NEAR/AT: MALOTT
COUNTY: OKANOGAN
STATE: WA

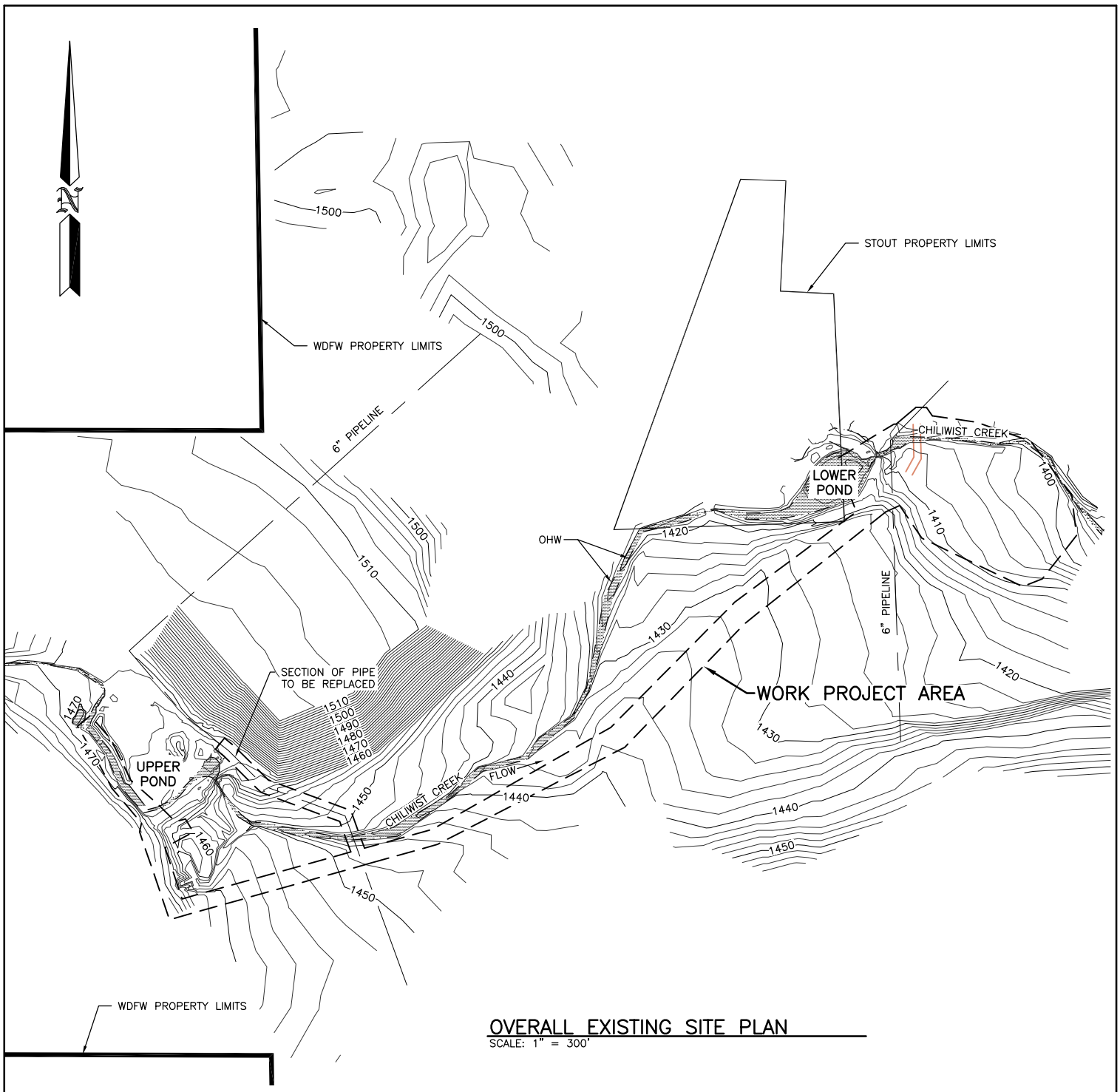

OVERALL EXISTING SITE PLAN

SCALE: 1" = 300'

REFERENCE NUMBER:

APPLICANT NAME: WASHINGTON DEPT. of FISH & WILDLIFE

PROPOSED PROJECT: STREAM RESTORATION

LOCATION: CHILIWIST WILDLIFE AREA

SHEET 2 OF 18 DATE: 11/27/2013

ENG. PROJECT NO. ON:R2:12-6

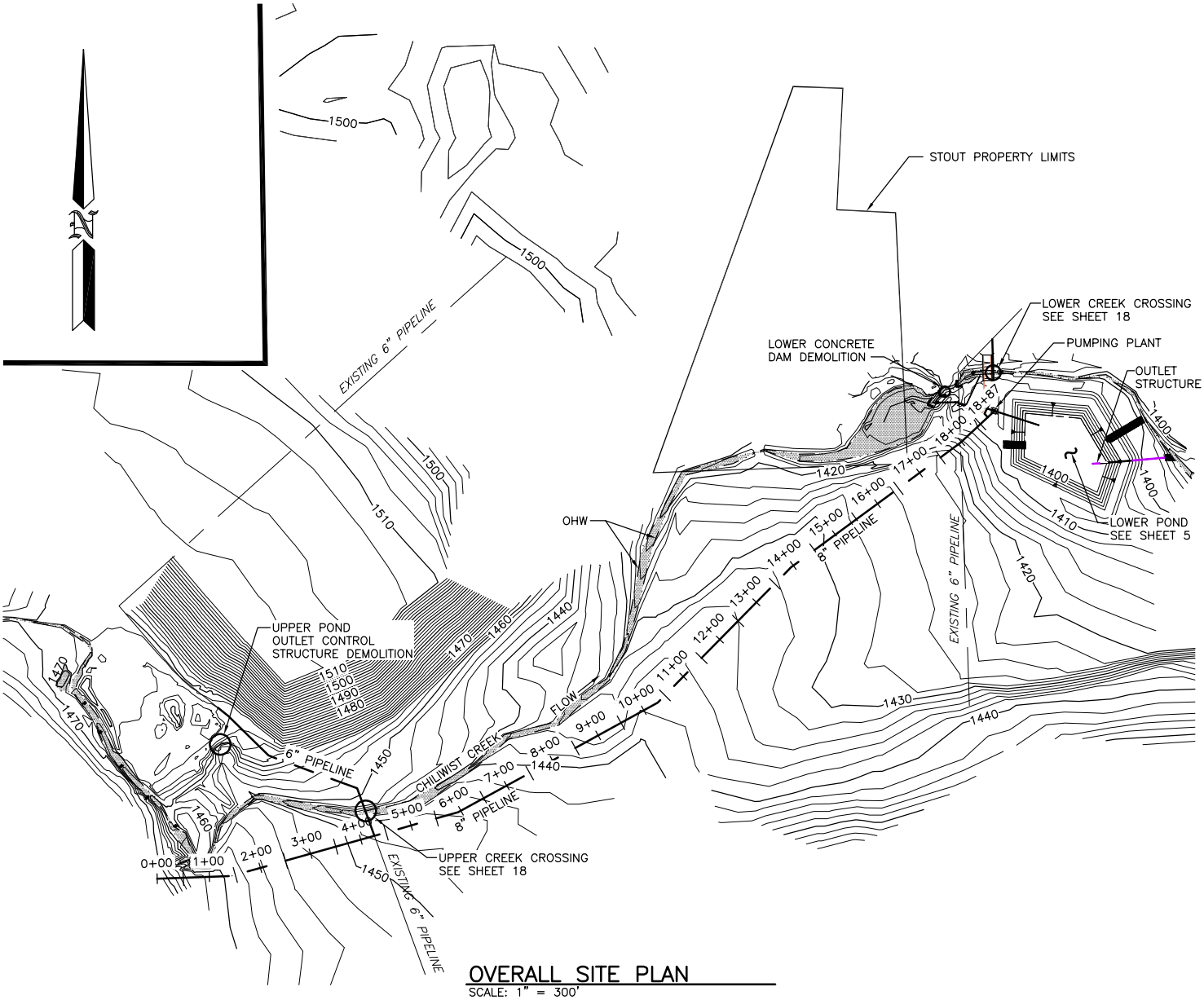

OVERALL SITE PLAN

SCALE: 1" = 300'

MATERIAL QUANTITIES					
		ABOVE OHW		BELOW OHW	
STRUCTURE	AREA	EXCAVATION	FILL	EXCAVATION	FILL
LOWER POND	1.18 ACRES	7100cy	2970cy	–	–
SCOUR PROTECTION	–	3cy	3cy	3cy	*3cy
DIVERSION	–	36cy	36cy	6cy	6cy
STREAM REGRADES	–	397cy	18cy	406cy	20cy
POND SPILLWAYS	–	–	–	8cy	*8cy
STREAMBED GRAVEL (MAXIMUM)	–	–	–	–	50cy
BOULDER CLUSTERS (NATIVE)	–	–	–	–	13cy
POROUS ROCKWEIRS (NATIVE)	–	–	–	10cy	15cy
TOTAL	1.18 ACRES	7536cy	3027cy	433cy	115cy

* = NATIVE COBBLE BELOW ORDINARY HIGH WATER

REFERENCE NUMBER:

APPLICANT NAME:
WASHINGTON DEPT. of FISH & WILDLIFE

PROPOSED PROJECT:
STREAM RESTORATION

LOCATION: CHILIWIST WILDLIFE AREA

SHEET 3 OF 18 DATE: 11/27/2013

ENG. PROJECT NO. ON:R2:12-6

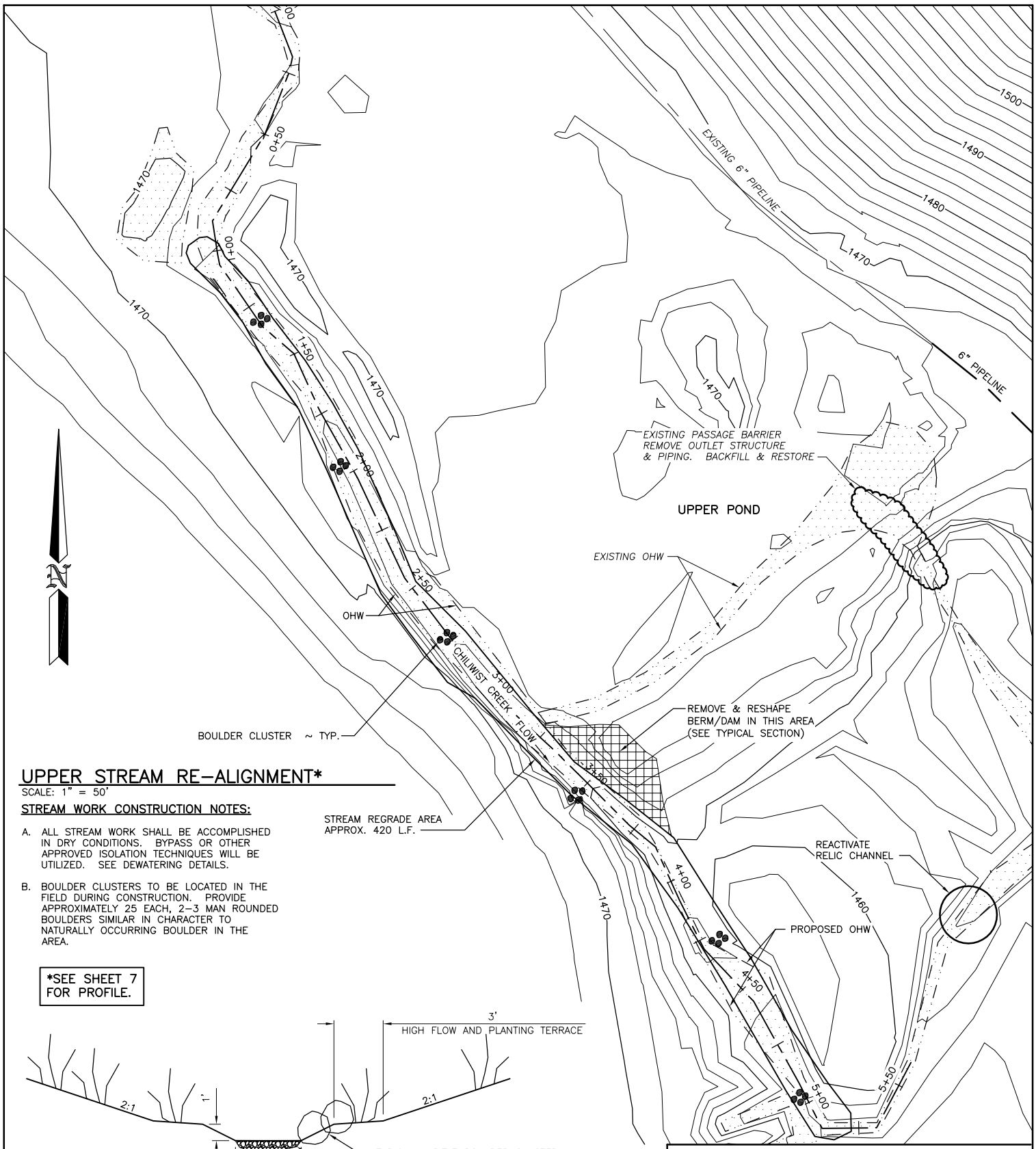

UPPER STREAM RE-ALIGNMENT*

SCALE: 1" = 50'

STREAM WORK CONSTRUCTION NOTES:

A. ALL STREAM WORK SHALL BE ACCOMPLISHED IN DRY CONDITIONS. BYPASS OR OTHER APPROVED ISOLATION TECHNIQUES WILL BE UTILIZED. SEE DEWATERING DETAILS.

B. BOULDER CLUSTERS TO BE LOCATED IN THE FIELD DURING CONSTRUCTION. PROVIDE APPROXIMATELY 25 EACH, 2-3 MAN ROUNDED BOULDERS SIMILAR IN CHARACTER TO NATURALLY OCCURRING BOULDER IN THE AREA.

*SEE SHEET 7 FOR PROFILE.

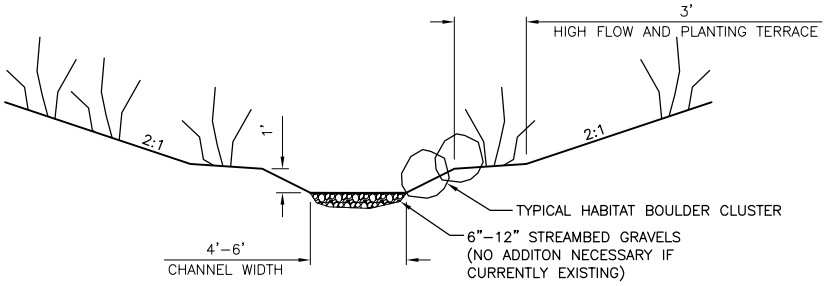

TYPICAL STREAM CHANNEL

NOT TO SCALE

REFERENCE NUMBER:

APPLICANT NAME:
WASHINGTON DEPT. of FISH & WILDLIFE

PROPOSED PROJECT:
STREAM RESTORATION

LOCATION: CHILIWIST WILDLIFE AREA

SHEET 4 OF 18 DATE: 11/27/2013

ENG. PROJECT NO. ON:R2:12-6

POND CONSTRUCTION NOTES:

1. CLEAR AND GRUB FOOTPRINT PRIOR TO CONSTRUCTION.
2. STRIP AND STOCKPILE TOPSOIL IMMEDIATELY ADJACENT TO POND LOCATION.
3. EXCAVATION SHALL BE EVALUATED BY ENGINEER. AFTER STRIPPING ENGINEER SHALL BE PRESENT TO MONITOR CONDITIONS ENCOUNTERED.
4. FILL SHALL BE PLACED IN LIFTS NOT TO EXCEED 6" AND COMPACTED TO 95% OF MAX. DENSITY. ENGINEER SHALL BE PRESENT TO OBSERVE.
5. TOPSOIL SHALL BE PLACED ON INSIDE POND SURFACE. UPON FINAL GRADING, OTHER SEAL TREATMENT MAY BE REQUIRED.
6. WLA PERSONNEL WILL SEED & PLANT DISTURBED AREAS.

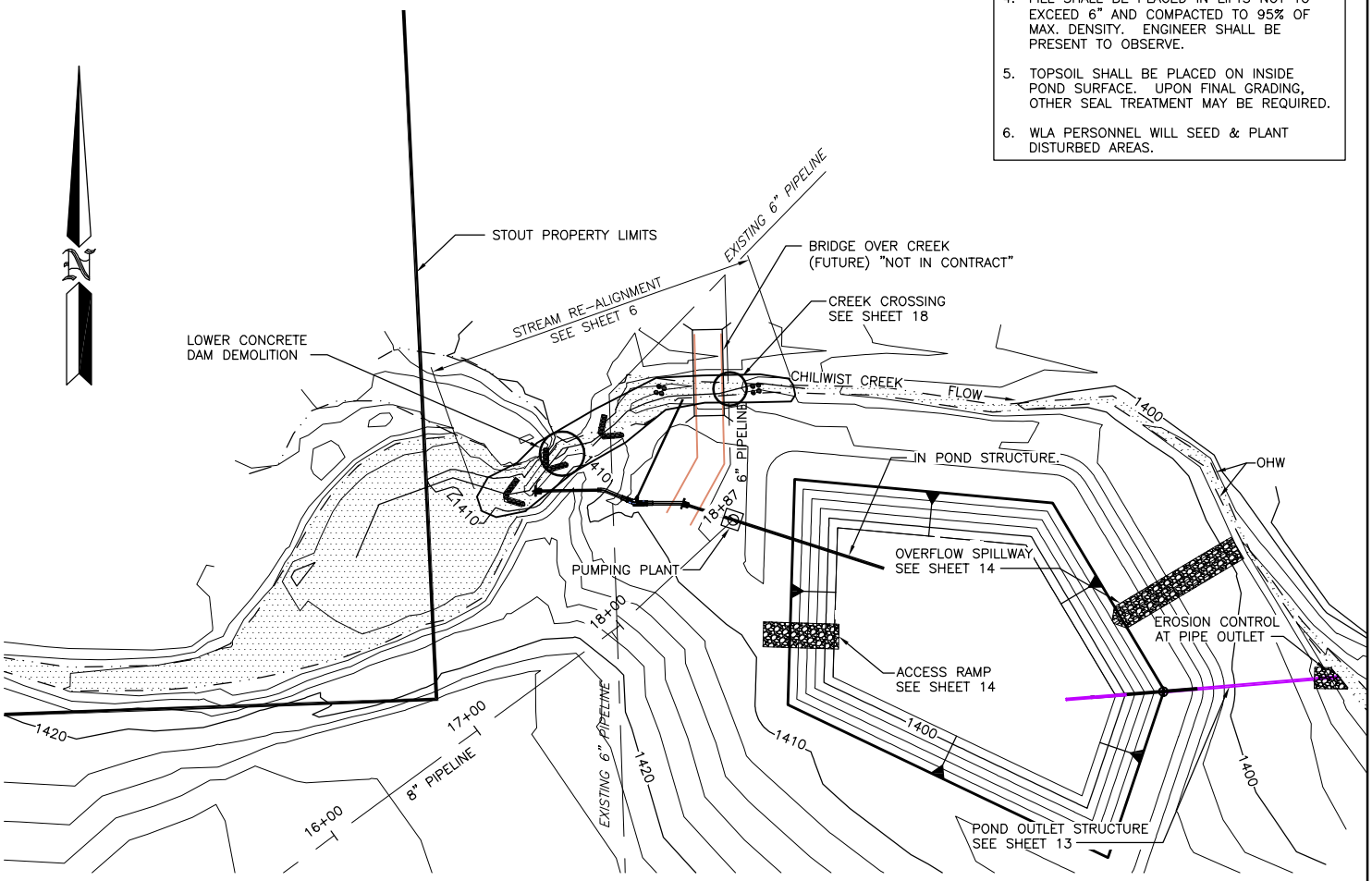

LOWER POND PLAN

SCALE: 1" = 100'

REFERENCE NUMBER:

APPLICANT NAME:
WASHINGTON DEPT. of FISH & WILDLIFE

PROPOSED PROJECT:
STREAM RESTORATION

LOCATION: CHILIWIST WILDLIFE AREA

SHEET 5 OF 18 DATE: 11/27/2013

ENG. PROJECT NO. ON:R2:12-6

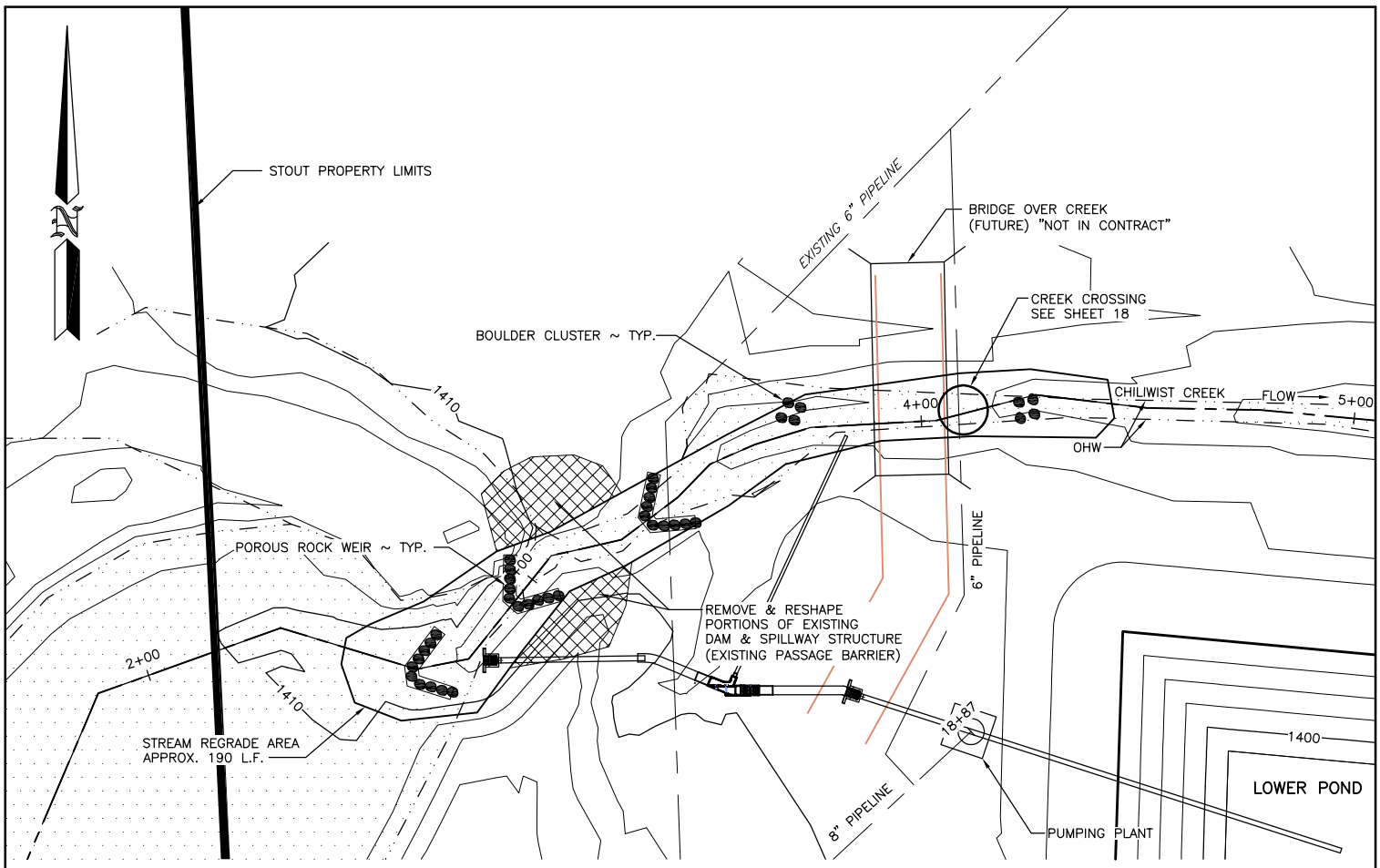

LOWER STREAM RE-ALIGNMENT*

SCALE: 1" = 40'

STREAM WORK CONSTRUCTION NOTES:

A. ALL STREAM WORK SHALL BE ACCOMPLISHED IN DRY CONDITIONS. BYPASS OR OTHER APPROVED ISOLATION TECHNIQUES WILL BE UTILIZED. SEE DEWATERING DETAILS.

B. POROUS ROCK WEIRS SHALL BE CONSTRUCTED IN ACCORDANCE WITH WDFW INTEGRATED STREAM PROTECTION GUIDEINES. THE WEIRS SHALL BE CONSTRUCTED SUCH THAT VERTICAL DROP SIN THE STREAMBED SHALL NOT EXCEED 0.8 FEET AND SHALL BE PASSABLE TO FISH. CONSTRUCTION SHALL BE MONITORED BY THE ENGINEER AND SHALL BE SUBJECT TO THE APPROVAL OF THE HABITAT BIOLOGIST.

C. BOULDER CLUSTERS TO BE LOCATED IN THE FIELD DURING CONSTRUCTION. PROVIDE APPROXIMATELY 8 EACH, 2-3 MAN ROUNDED BOULDERS SIMILAR IN CHARACTER TO NATURALLY OCCURRING BOULDER IN THE AREA.

D. WEIRS WILL BE CONSTRUCTED USING APPROXIMATELY 5 CUBIC YARDS OF SEMI-ANGULAR ROCK, WITH THE FOLLOWING GRADATION:

D_{100} = 24"
D_{85} = 18"
D_{50} = 12"
D_{15} = 6"

*SEE SHEET 8 FOR PROFILE.

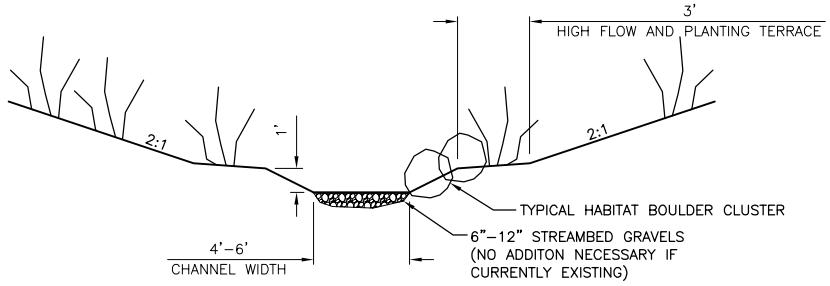

TYPICAL STREAM CHANNEL

NOT TO SCALE

REFERENCE NUMBER:

APPLICANT NAME: WASHINGTON DEPT. of FISH & WILDLIFE

PROPOSED PROJECT: STREAM RESTORATION

LOCATION: CHILIWIST WILDLIFE AREA

SHEET 6 OF 18 DATE: 11/27/2013

ENG. PROJECT NO. ON:R2:12-6

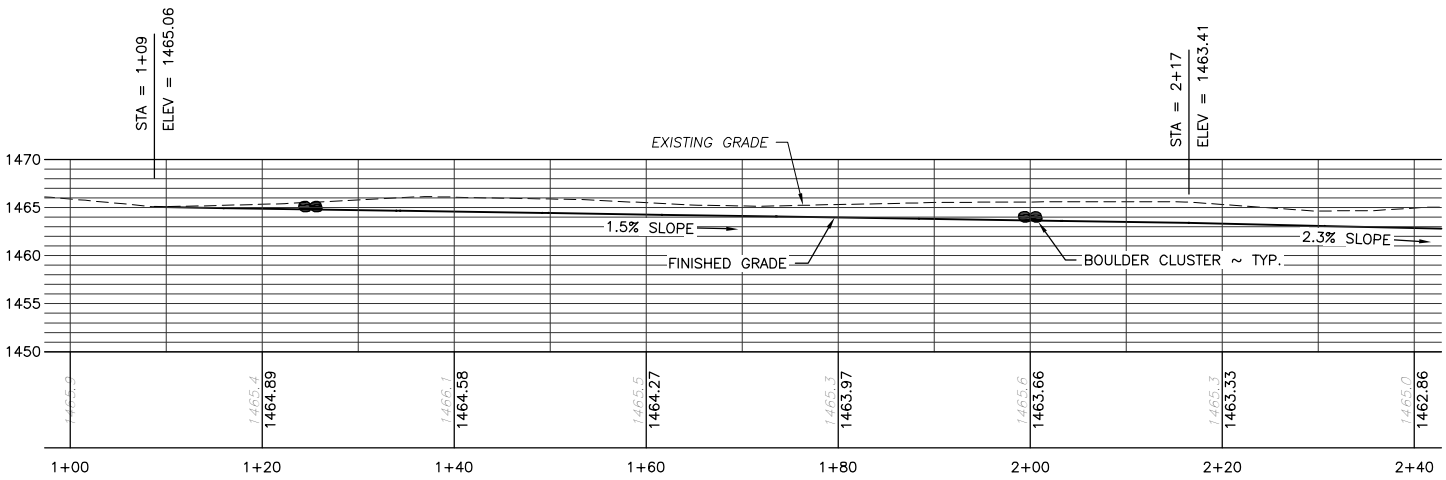

STA. 1+00 – 2+40

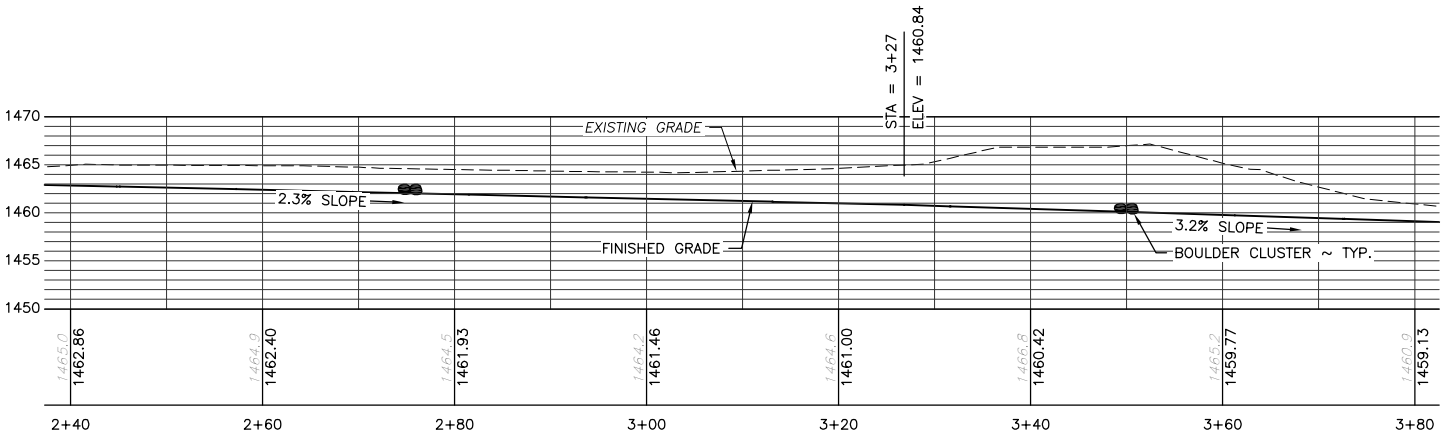

STA. 2+40 – 3+80

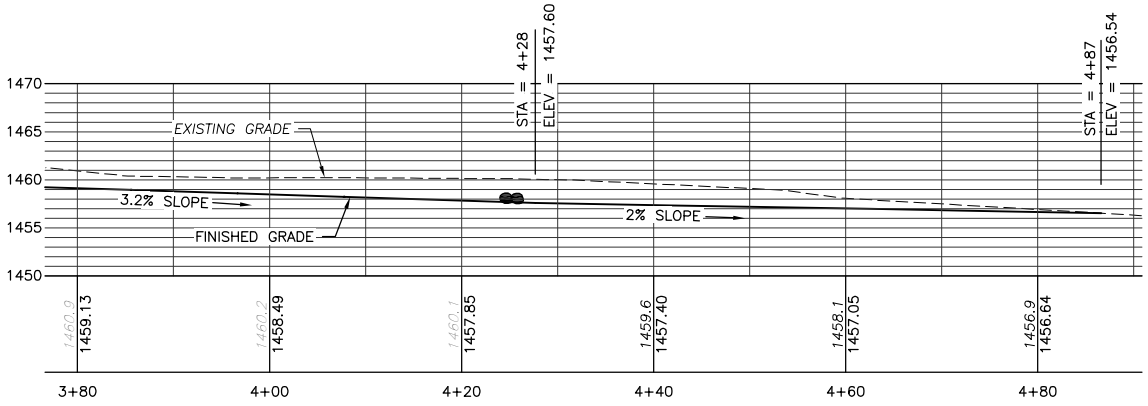

STA. 3+80 – 4+90

UPPER STREAM PROFILE

SCALE: 1" = 20'

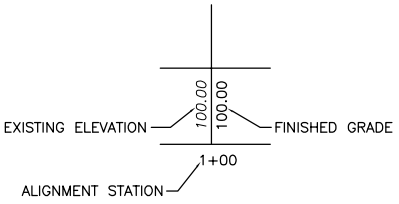

PROFILE LEGEND

REFERENCE NUMBER:

APPLICANT NAME: WASHINGTON DEPT. of FISH & WILDLIFE

PROPOSED PROJECT: STREAM RESTORATION

LOCATION: CHILIWIST WILDLIFE AREA

SHEET 7 OF 18 DATE: 11/27/2013

ENG. PROJECT NO. ON:R2:12–6

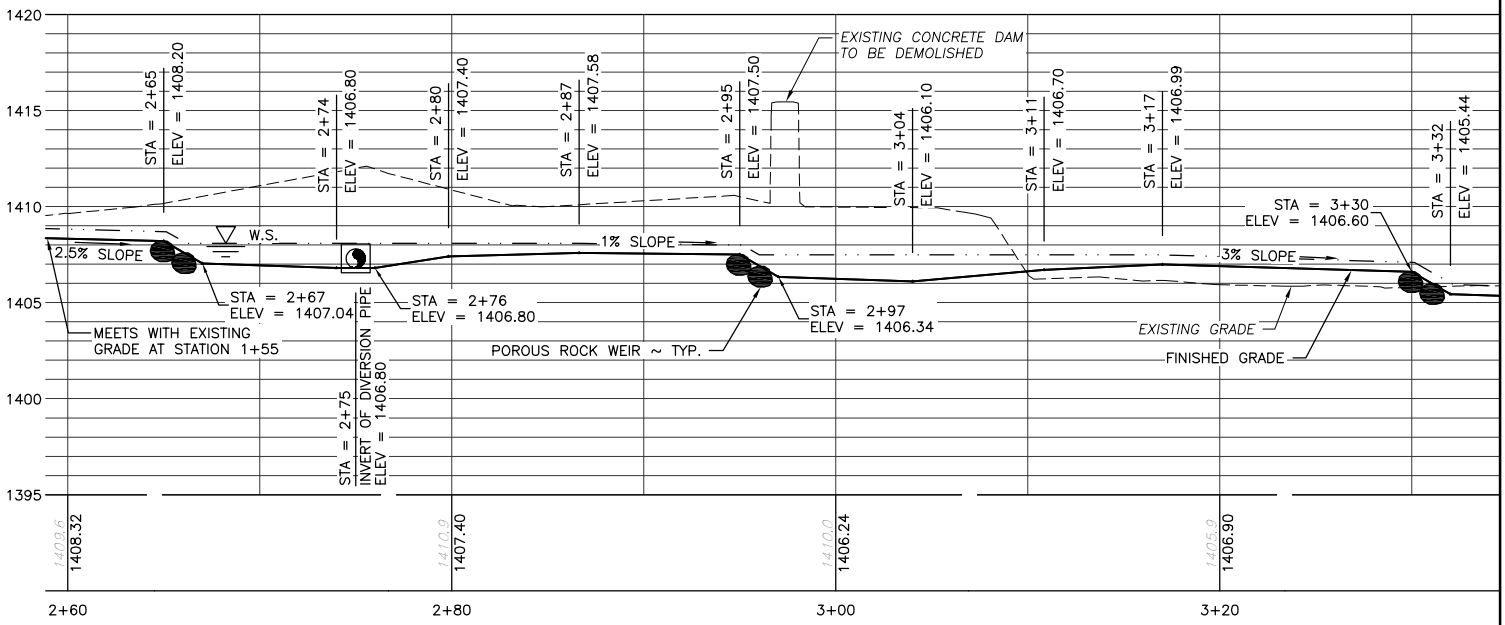

STA. 2+60 – 3+25

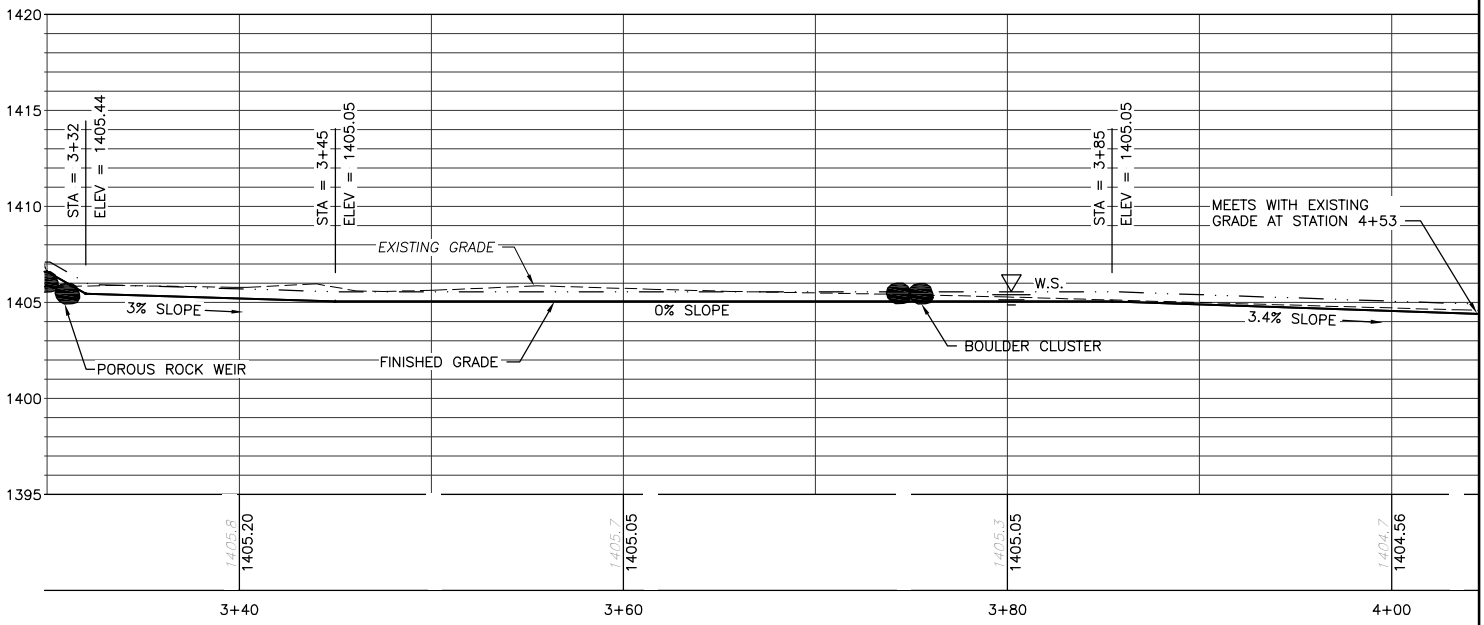

STA. 3+45 – 4+00

LOWER STREAM PROFILE

SCALE: 1" = 10'

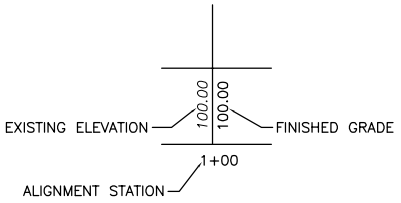

PROFILE LEGEND

REFERENCE NUMBER:

APPLICANT NAME:
WASHINGTON DEPT. of FISH & WILDLIFE

PROPOSED PROJECT:
STREAM RESTORATION

LOCATION: CHILIWIST WILDLIFE AREA

SHEET 8 OF 18 DATE: 11/27/2013

ENG. PROJECT NO. ON:R2:12–6

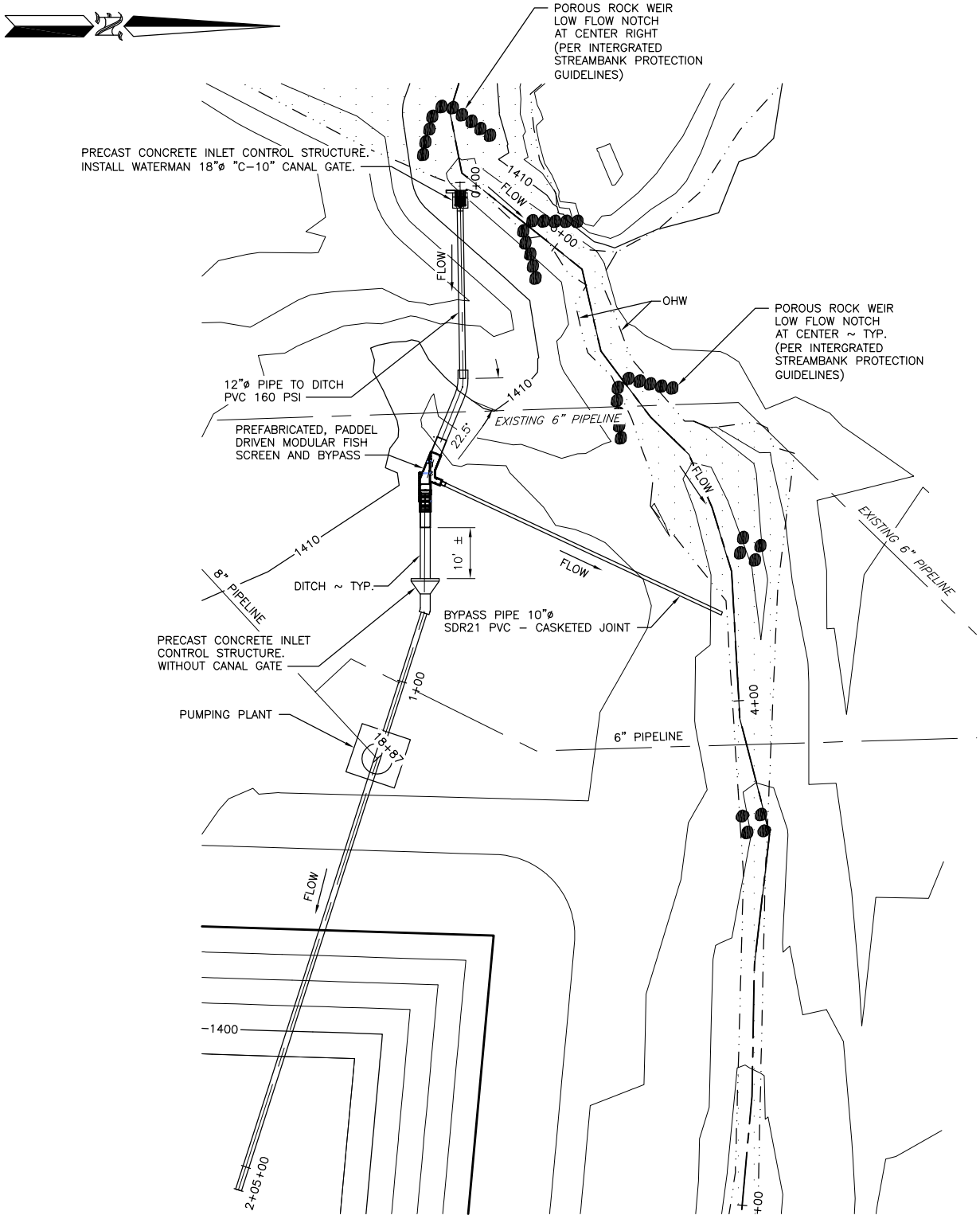

STREAM DIVERSION DETAIL

SCALE: 1" = 30'

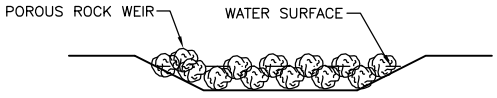

TYPICAL ROCK WIER SECTION

NOT TO SCALE

REFERENCE NUMBER:

APPLICANT NAME:
WASHINGTON DEPT. of FISH & WILDLIFE

PROPOSED PROJECT:
STREAM RESTORATION

LOCATION: CHILIWIST WILDLIFE AREA

SHEET 9 OF 18 DATE: 11/27/2013

ENG. PROJECT NO. ON:R2:12-6

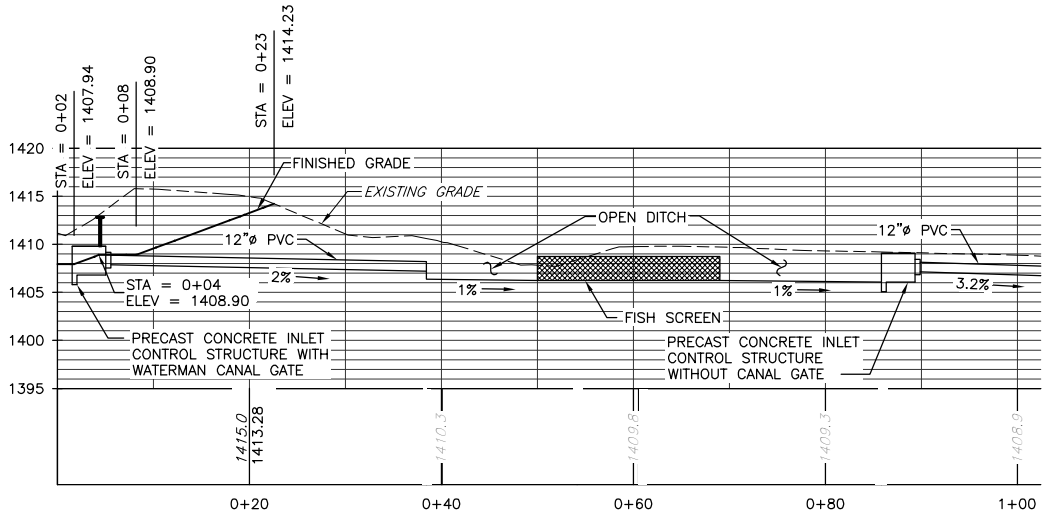

STA. 0+00 – 1+00

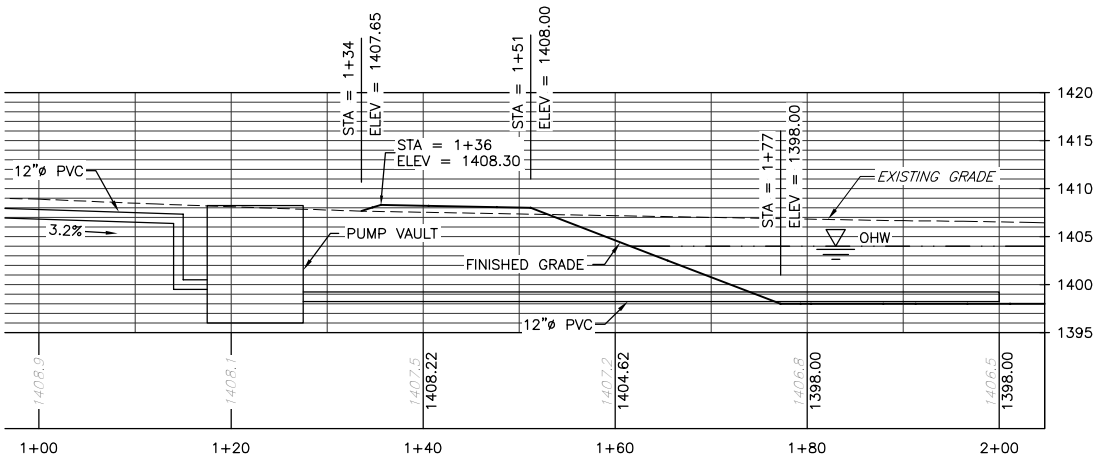

STA. 1+00 – 2+00

DIVERSION PROFILE

SCALE: 1" = 20'

REFERENCE NUMBER:

APPLICANT NAME:
WASHINGTON DEPT. of FISH & WILDLIFE

PROPOSED PROJECT:
STREAM RESTORATION

LOCATION: CHILIWIST WILDLIFE AREA

SHEET 10 OF 18 DATE: 11/27/2013

ENG. PROJECT NO. ON:R2:12–6

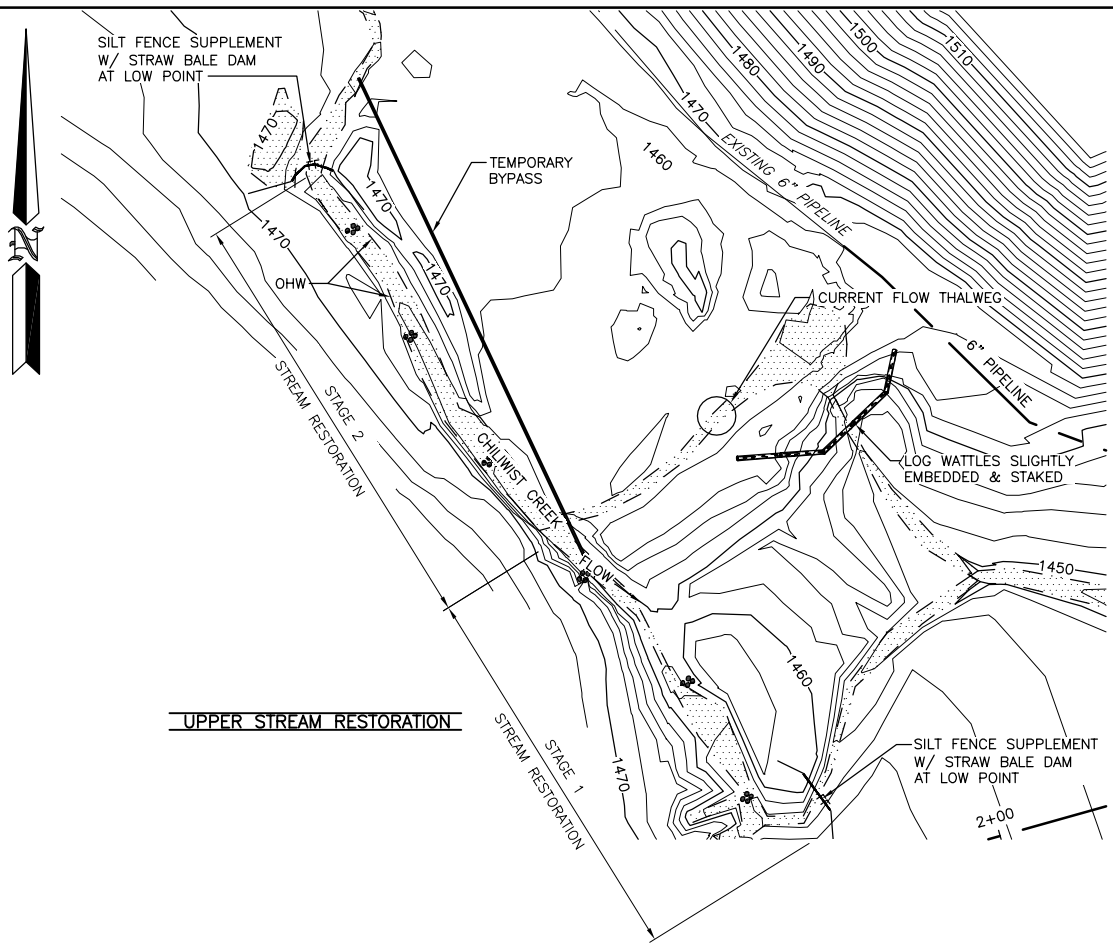

UPPER STREAM RESTORATION

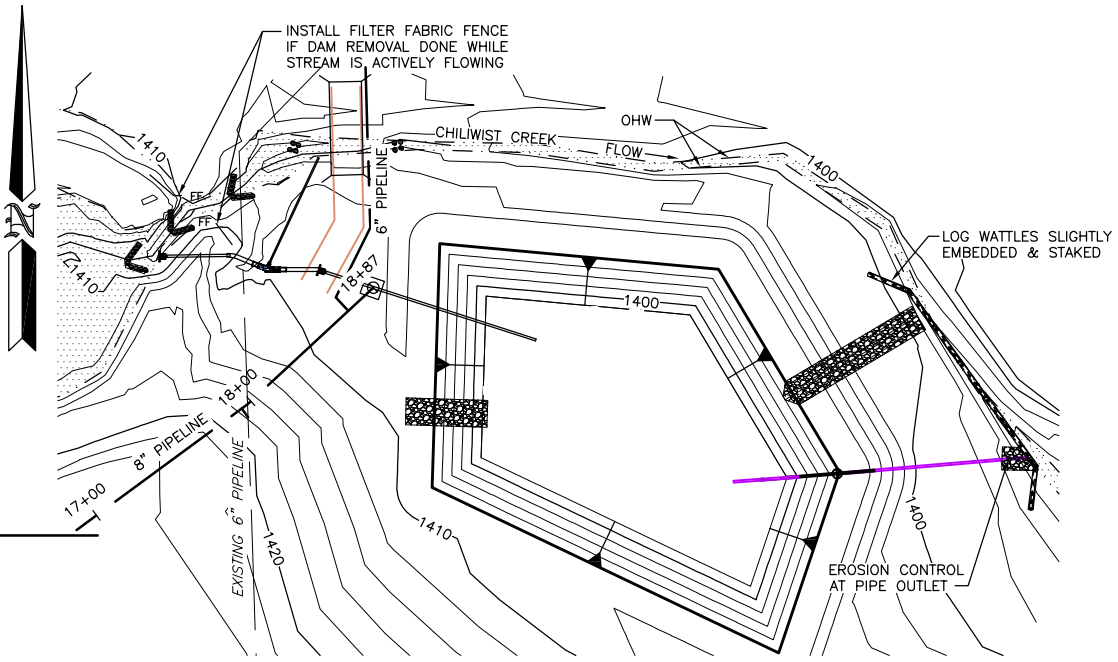

LOWER POND

EROSION CONTROL PLANS

SCALE: 1" = 100'

EROSION CONTROL NOTES:

1. INSTALL LOG WATTLES BEFORE GRUBBING.
2. IMPLEMENT STREAM DEWATERING SYSTEM.
3. COVER DISTURBED SOIL WITH SEED & WEED FREE STRAW (1"–2" THICK).
4. PLANT DESIGNATED AREAS IN ACCORDANCE WITH MITIGATION PLANTING PLAN.
5. REMOVE DEWATERING SYSTEM & RESTORE THOSE AREAS IN LIKE MANNER.
6. REMOVE EROSION CONTROL MEASURES AFTER VEGITATION IS ESTABLISHED. (6 MONTHS – 12 MONTHS)

NOTES:

1. CREEK WORK BE DONE AFTER IMPLEMENTING DEWATERING TECHNIQUE.
2. BE PREPARED TO PUMP SILT LADEN WATER FROM BEHIND BYPASS SYSTEM, IN CASE OF STORM EVENTS.

REFERENCE NUMBER:

APPLICANT NAME: WASHINGTON DEPT. of FISH & WILDLIFE

PROPOSED PROJECT: STREAM RESTORATION

LOCATION: CHILIWIST WILDLIFE AREA

SHEET 11 OF 18 DATE: 11/27/2013

ENG. PROJECT NO. ON:R2:12–6

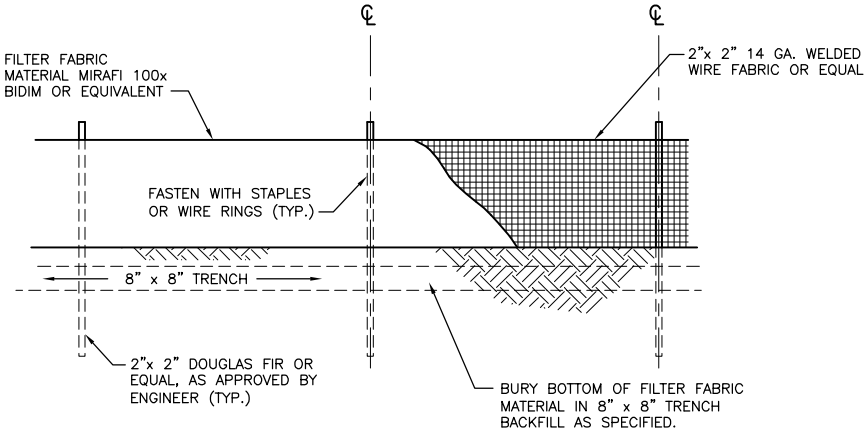

FILTER FABRIC FENCE

NOT TO SCALE

FILTER FABRIC NOTES:

1. FILTER FABRIC SHALL BE PURCHASED CONTINUOUS ROLL CUT TO LENGTH OF BARRIER AS NEEDED. IF JOINTS ARE NECESSARY FABRIC SHALL BE SPLICED TOGETHER ONLY AT SUPPORT POSTS WITH A MINIMUM OF (6) INCH OVERLAP. BOTH ENDS SHALL BE SECURED AS REQUIRED.
2. FILTER FABRIC SHALL BE INSTALLED TO FOLLOW CONTOURS. FENCE POSTS SHALL BE SPACED A MAXIMUM OF EIGHT (8) FEET APART UNLESS OTHERWISE SHOWN HEREIN. ALL POSTS SHALL BE DRIVEN INTO THE GROUND A MINIMUM OF 30 INCHES.
3. A TRENCH SHALL BE EXCAVATED, ROUGHLY EIGHT (8) INCHES WIDE BY EIGHT (8) INCHES DEEP UP SLOPE AND ADJACENT TO THE POST TO ALLOW THE FILTER FABRIC TO BE BURIED.
4. WHEN STANDARD STRENGTH FILTER FABRIC IS UTILIZED, A WIRE SINGLE SPACE MESH SUPPORT FENCE SHALL BE FASTENED TO THE UPSLOPE (OR UPSTREAM) SIDE OF THE POSTS USING ONE (1) INCH MINIMUM LENGTH WIRE STAPLES, TIE WIRE OR APPROVED HOG RINGS. ALL WIRE SUPPORT SHALL EXTEND INTO THE TRENCH A MINIMUM OF FOUR (4) INCHES AND SHALL NOT EXTEND MORE THAN 36 INCHES ABOVE ORIGINAL GRADE.
5. ALL FILTER FABRIC SHALL BE STAPLED OR WIRED TO SUPPORT FENCING AND A MINIMUM OF 20 INCHES OF FABRIC SHALL BE EXTENDED INTO THE TRENCH. FILTER FABRIC SHALL NOT BE STAPLED OR FASTENED TO EXISTING TREES OF STRUCTURES UNLESS OTHERWISE APPROVED BY THE ENGINEER.
6. IF HIGH STRENGTH FILTER FABRIC AND CLOSER SPACING ARE USED, THE WIRE SUPPORT FENCING MAY BE ELIMINATED. HIGH STRENGTH FABRIC SHALL BE STAPLED OR WIRED DIRECTLY TO POSTS AS REQUIRED BY THE ENGINEER.
7. CUTOFF TRENCH SHALL BE BACKFILLED WITH 3/4 INCH MINIMUM DIAMETER WASHED GRAVEL OR OTHER SIMILAR SOURCE AS APPROVED BY THE ENGINEER.
8. FILTER FENCING SHALL BE INSTALLED WHERE SHOWN ON THE PLAN, OR AS MARKED IN THE FIELD BY THE ENGINEER, PRIOR TO COMMENCEMENT OF WORK. ALL FENCING SHALL BE INSPECTED DAILY DURING CONSTRUCTION AND AFTER EACH SIGNIFICANT RAINFALL EVENT UNTIL SITE HAS BEEN PERMANENTLY STABILIZED. ANY REQUIRED REPAIRS SHALL BE MADE IMMEDIATELY.
9. REMOVAL OF TRAPPED SEDIMENT SHALL BE PERFORMED WHEN AMOUNTS REACH APPROXIMATELY 1/3 HEIGHT OF THE FENCE.
10. FILTER FENCING SHALL REMAIN IN-PLACE UNTIL SITE HAS BEEN REVEGETATED TO ORIGINAL CONDITION OR DIRECTED BY THE ENGINEER.

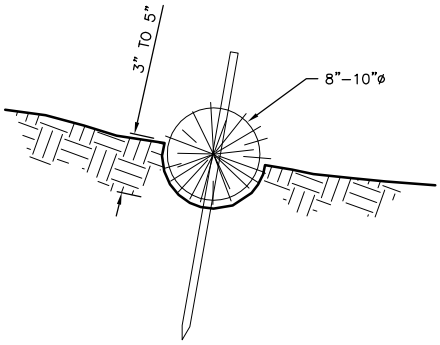

1" X 1" STAKE

STRAW WATTLE DETAIL

NOT TO SCALE

CONSTRUCTION SPECIFICATIONS:

1. PREPARE THE SLOPE BEFORE THE WATTLING PROCEDURE IS STARTED.
2. SHALLOW GULLIES SHOULD BE SMOOTHED AS WORK PROGRESSES.
3. DIG SMALL TRENCHES ACROSS THE SLOPE ON CONTOUR, TO PLACE ROLLS IN. THE TRENCH SHOULD BE DEEP ENOUGH TO ACCOMMODATE HALF THE THICKNESS OF THE ROLL. WHEN THE SOIL IS LOOSE AND UNCOMPACTED, THE TRENCH SHOULD BE DEEP ENOUGH TO BURY THE ROLL 2/3 OF ITS THICKNESS BECAUSE THE GROUND WILL SETTLE.
4. IT IS CRITICAL THAT ROLLS ARE INSTALLED PERPENDICULAR TO WATER MOVEMENT, PARALLEL TO THE SLOPE CONTOUR.
5. START BUILDING TRENCHES AND INSTALL ROLLS FROM THE BOTTOM OF THE SLOPE AND WORK UP.
6. CONSTRUCT TRENCHES AT CONTOUR INTERVALS OF 3-12 FEET APART DEPENDING ON STEEPNESS OF SLOPE. THE STEEPER THE SLOPE, THE CLOSER TOGETHER THE TRENCHES. 1:1=10' 3:1=30'
7. 2:1=20' 4:1=40'
8. LAY THE ROLL ALONG THE TRENCHES FITTING IT SNUGLY AGAINST THE SOIL. MAKE SURE NO GAPS EXIST BETWEEN THE SOIL AND THE STRAW WATTLE.
9. USE A STRAIGHT BAR TO DRIVE HOLES THROUGH THE WATTLE AND INTO THE SOIL FOR THE WILLOW OR WOODEN STAKES.
10. DRIVE THE STAKE THROUGH PREPARED HOLE INTO SOIL. LEAVE ONLY 1 OR 2 INCHES OF STAKE EXPOSED ABOVE ROLL.
11. IF USING WILLOW STAKES REFER TO LIVE STAKING BMP.
12. INSTALL STAKES AT LEAST EVERY 4 FEET APART THROUGH THE WATTLE. ADDITIONAL STAKES MAY BE DRIVEN ON THE DOWNSLOPE SIDE OF THE TRENCHES ON HIGHLY EROSIVE OR VERY STEEP SLOPES.
13. INSPECT THE STRAW ROLLS AND THE SLOPES AFTER SIGNIFICANT STORMS. MAKE SURE THE ROLLS ARE IN CONTACT WITH THE SOIL.
14. REPAIR ANY RILLS OR GULLYS PROMPTLY.
15. RESEED OR REPLANT VEGETATION IF NECESSARY UNTIL THE SLOPE IS STABILIZED.

REFERENCE NUMBER:

APPLICANT NAME:
WASHINGTON DEPT. of FISH & WILDLIFE

PROPOSED PROJECT:
STREAM RESTORATION

LOCATION: CHILIWIST WILDLIFE AREA

SHEET 12 OF 18 DATE: 11/27/2013

ENG. PROJECT NO. ON:R2:12-6

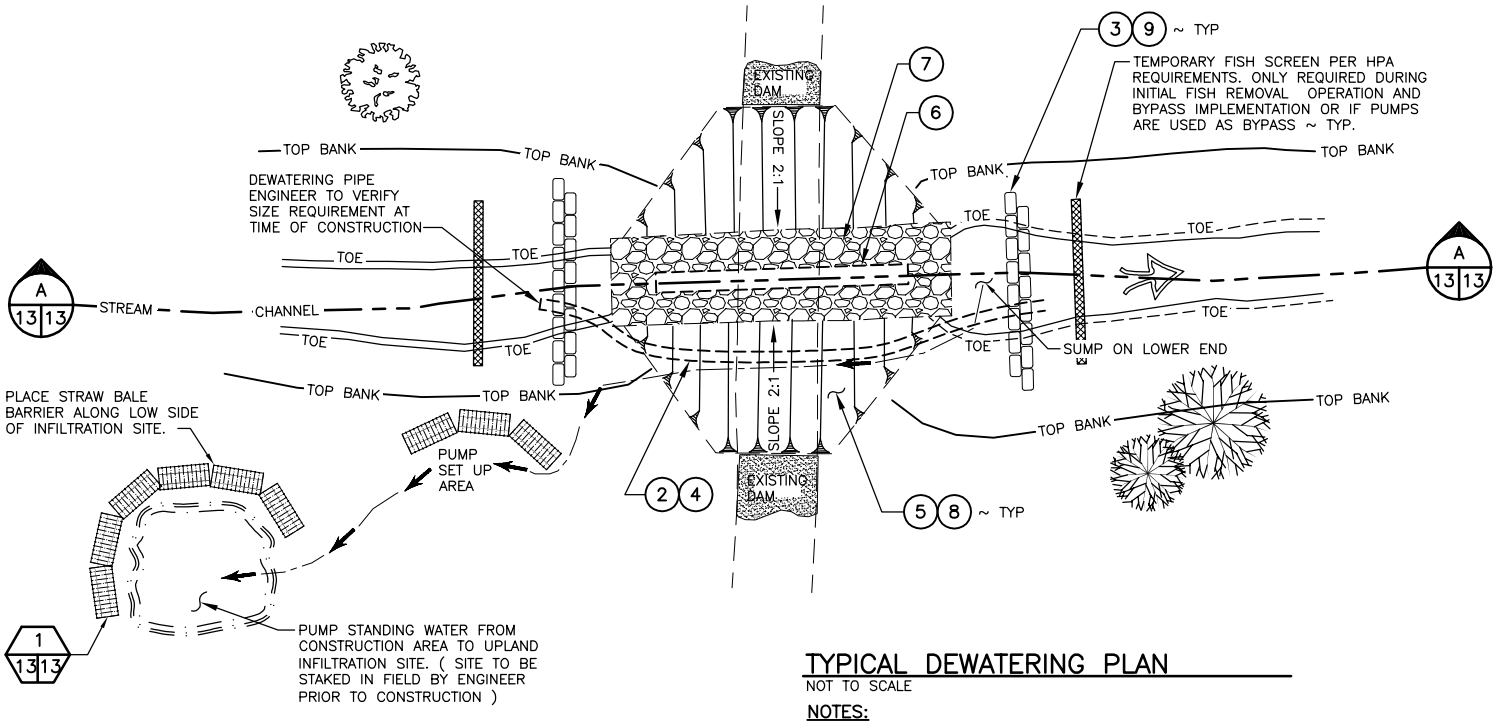

TYPICAL DEWATERING PLAN

NOT TO SCALE

NOTES:

1. ALL WORK SHALL BE IN ACCORDANCE WITH HPA.
2. DURING CONSTRUCTION (IF WATER IS PRESENT) STREAM FLOW SHALL BE DIVERTED THROUGH BYPASS PIPE. IF HIGH FLOW, (2) DIVERSION PIPES MAY BE NEEDED OR BY USE OF PUMP.
3. PLACE BAGS FILLED WITH PEA GRAVEL TO SEAL BYPASS INLET AND OUTLET
4. DIVERSION SHALL BE APPROVED BY INSPECTOR PRIOR TO EXCAVATION.
5. EXCAVATE EXISTING FILL.
6. COMPLETE IN CHANNEL WORK.
7. PLACE NEW BED MATERIAL MIX AND REMOVE BYPASS PIPE/PUMP.
8. COVER ALL EXPOSED SOIL WITH STRAW MULCH AND GRASS SEED. (SEE SITE RESTORATION PLAN)
9. REMOVE DIVERSION BAGS AND FISH SCREENS BY HAND.

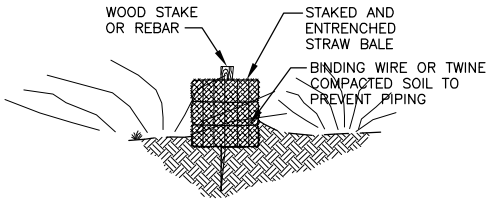

DETAIL

NOT TO SCALE

1
13 13

NOTES:

1. BALES SHALL BE PLACED IN A SINGLE ROW, LENGTHWISE ON THE CONTOUR, WITH ENDS OF ADJACENT BALES TIGHTLY ABUTTING ONE ANOTHER.
2. THE BARRIER SHALL BE ENTRENCHED AND BACKFILLED. A TRENCH SHALL BE A MINIMUM OF 4 INCHES. BACKFILL SOIL SHALL CONFORM TO THE GROUND LEVEL ON THE DOWNHILL SIDE AND SHALL BE BUILT UP 4 INCHES AGAINST THE UPHILL SIDE OF THE BARRIER. EACH BALE SHALL BE SECURELY ANCHORED BY AT LEAST 2 STAKES OR REBAR DRIVEN THROUGH THE BALE.
3. THE GAP BETWEEN THE BALES SHALL BE CHINKED (FILLED BY WEDGING) WITH STRAW TO PREVENT WATER FROM ESCAPING BETWEEN THE BALES.

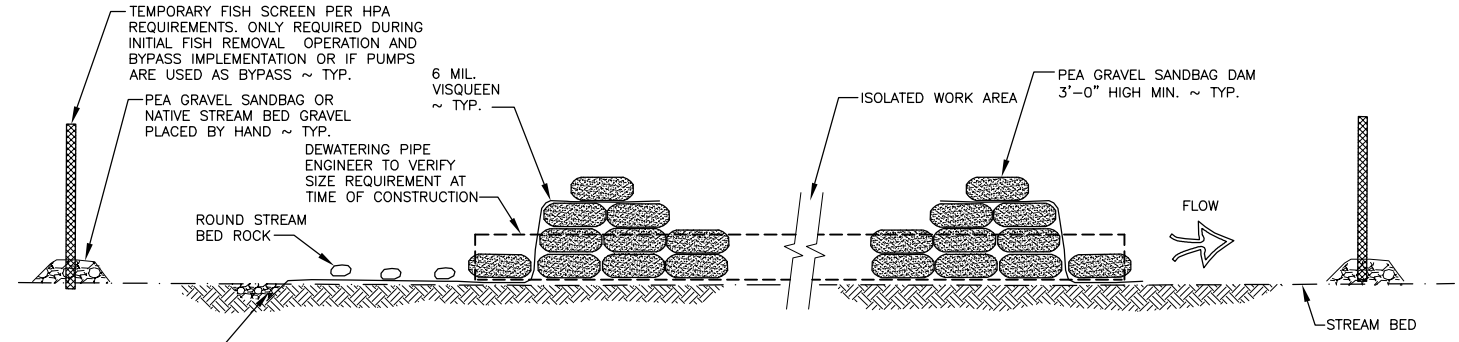

SECTION

NOT TO SCALE

A
13 13

REFERENCE NUMBER:

APPLICANT NAME:
WASHINGTON DEPT. of FISH & WILDLIFE

PROPOSED PROJECT:
STREAM RESTORATION

LOCATION: CHILIWIST WILDLIFE AREA

SHEET 13 OF 18 DATE: 11/27/2013

ENG. PROJECT NO. ON:R2:12-6

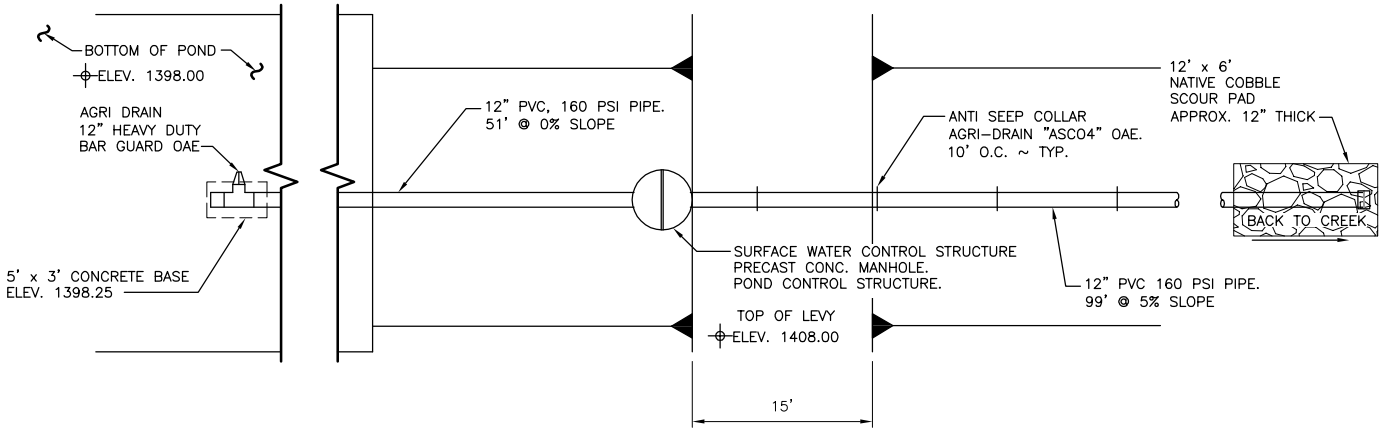

PLAN

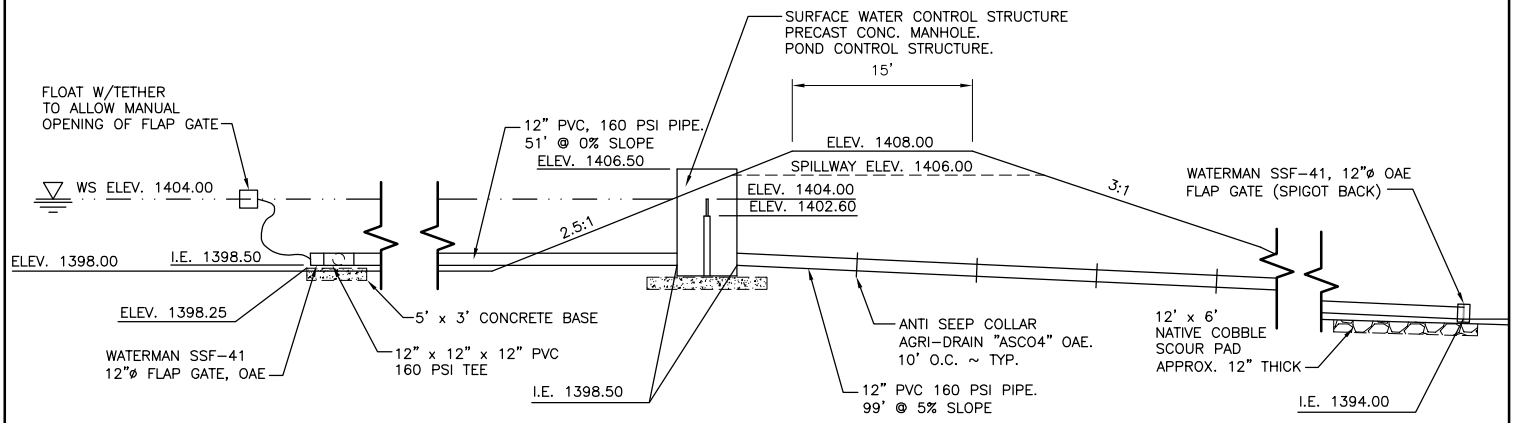

ELEVATION

POND OUTLET DETAIL (LOWER POND)

SCALE: 1" = 16'

REFERENCE NUMBER:

APPLICANT NAME:
WASHINGTON DEPT. of FISH & WILDLIFE

PROPOSED PROJECT:
STREAM RESTORATION

LOCATION: CHILIWIST WILDLIFE AREA

SHEET 14 OF 18 DATE: 11/27/2013

ENG. PROJECT NO. ON:R2:12-6

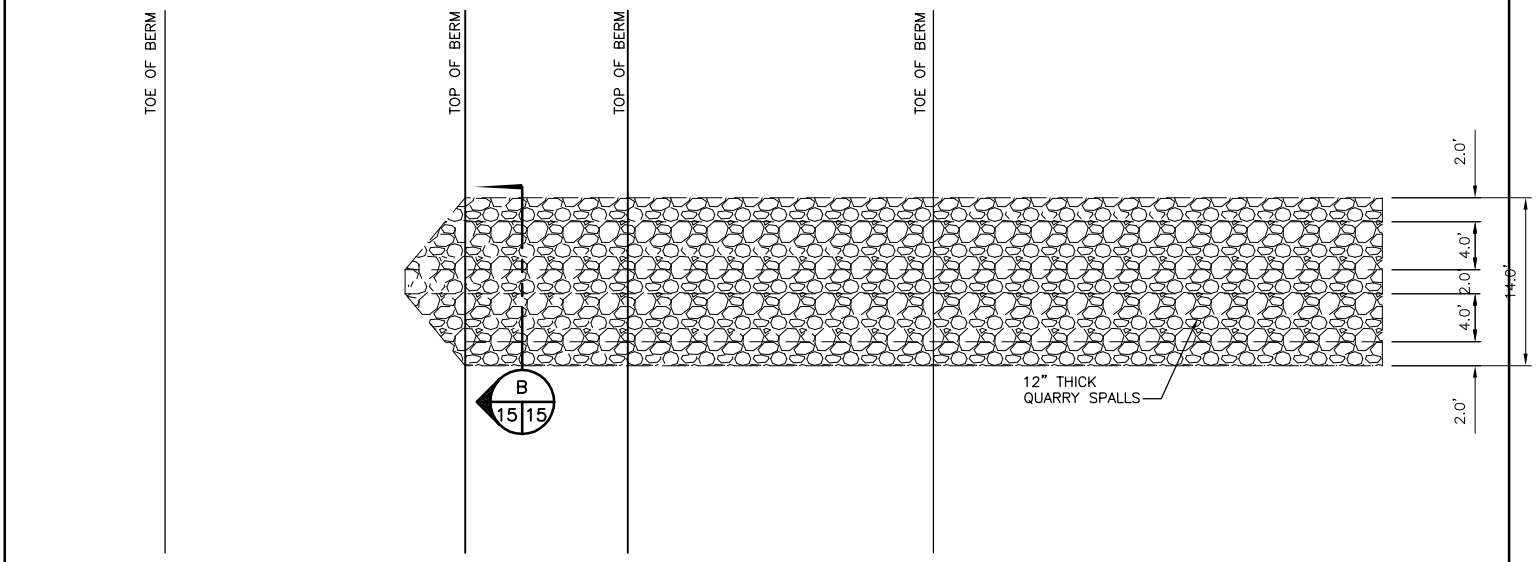

PLAN

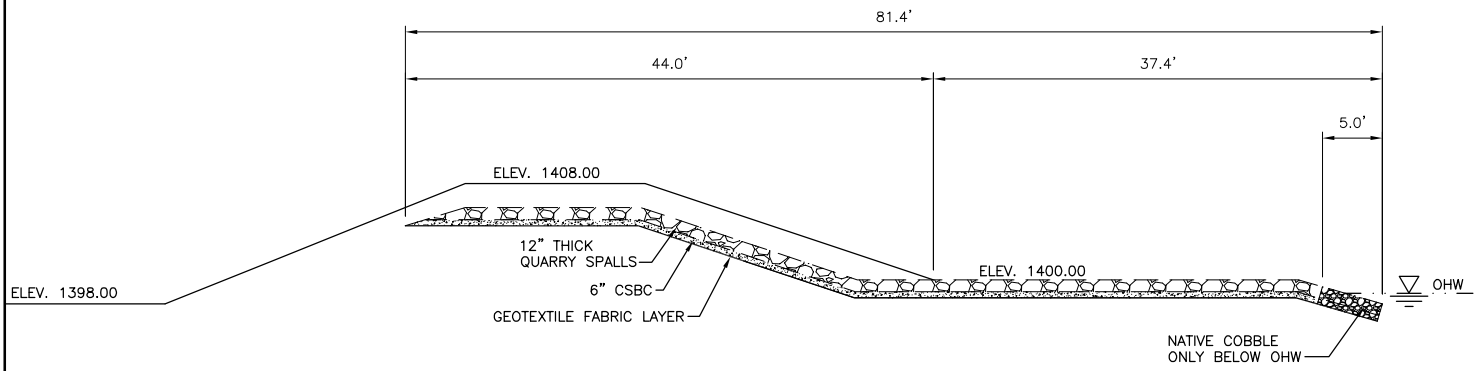

ELEVATION

TYPICAL POND SPILLWAY

SCALE: 1" = 16'

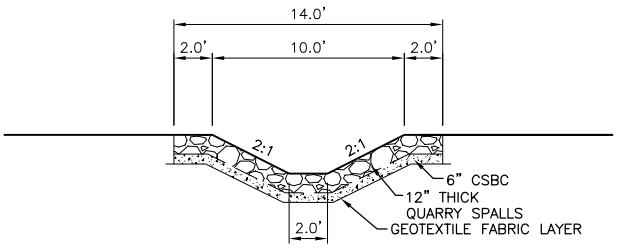

SECTION

SCALE: 1" = 10'

B
15 15

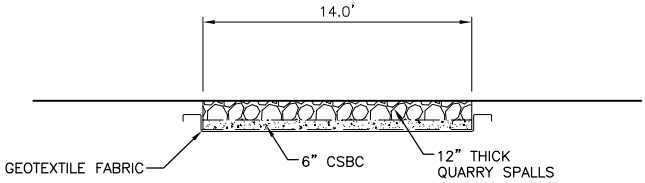

TYPICAL ACCESS RAMP SECTION

SCALE: 1" = 10'

REFERENCE NUMBER:

APPLICANT NAME:
WASHINGTON DEPT. of FISH & WILDLIFE

PROPOSED PROJECT:
STREAM RESTORATION

LOCATION: CHILIWIST WILDLIFE AREA

SHEET 15 OF 18 DATE: 11/27/2013

ENG. PROJECT NO. ON:R2:12-6

MITIGATION AREA 1 (UPPER STREAM)

SCALE: 1" = 80'

PLANTING SCHEDULE – MITIGATION AREA 1				
COMMON NAME	SCIENTIFIC NAME	QUANTITY	SPACING	REMARKS
STREAM (4270 SF)				
COYOTE WILLOW	SALIX EXIGUA	140	3 FEET ON CENTER	CUTTINGS (LIVE STAKE)
RED–OSIER DOGWOOD	CORNUS STOLONIFERA	140	3 FEET ON CENTER	CUTTINGS (LIVE STAKE)
MOCK ORANGE	PHILADELPHUS LEISII	40	4 FEET ON CENTER	1 GALLON CONTAINERS
SERVICEBERRY	AMELANCHIER ALNIFOLIA	40	4 FEET ON CENTER	1 GALLON CONTAINERS

REFERENCE NUMBER:

APPLICANT NAME:
WASHINGTON DEPT. of FISH & WILDLIFE

PROPOSED PROJECT:
STREAM RESTORATION

LOCATION: CHILIWIST WILDLIFE AREA

SHEET 16 OF 18 DATE: 11/27/2013

ENG. PROJECT NO. ON:R2:12–6

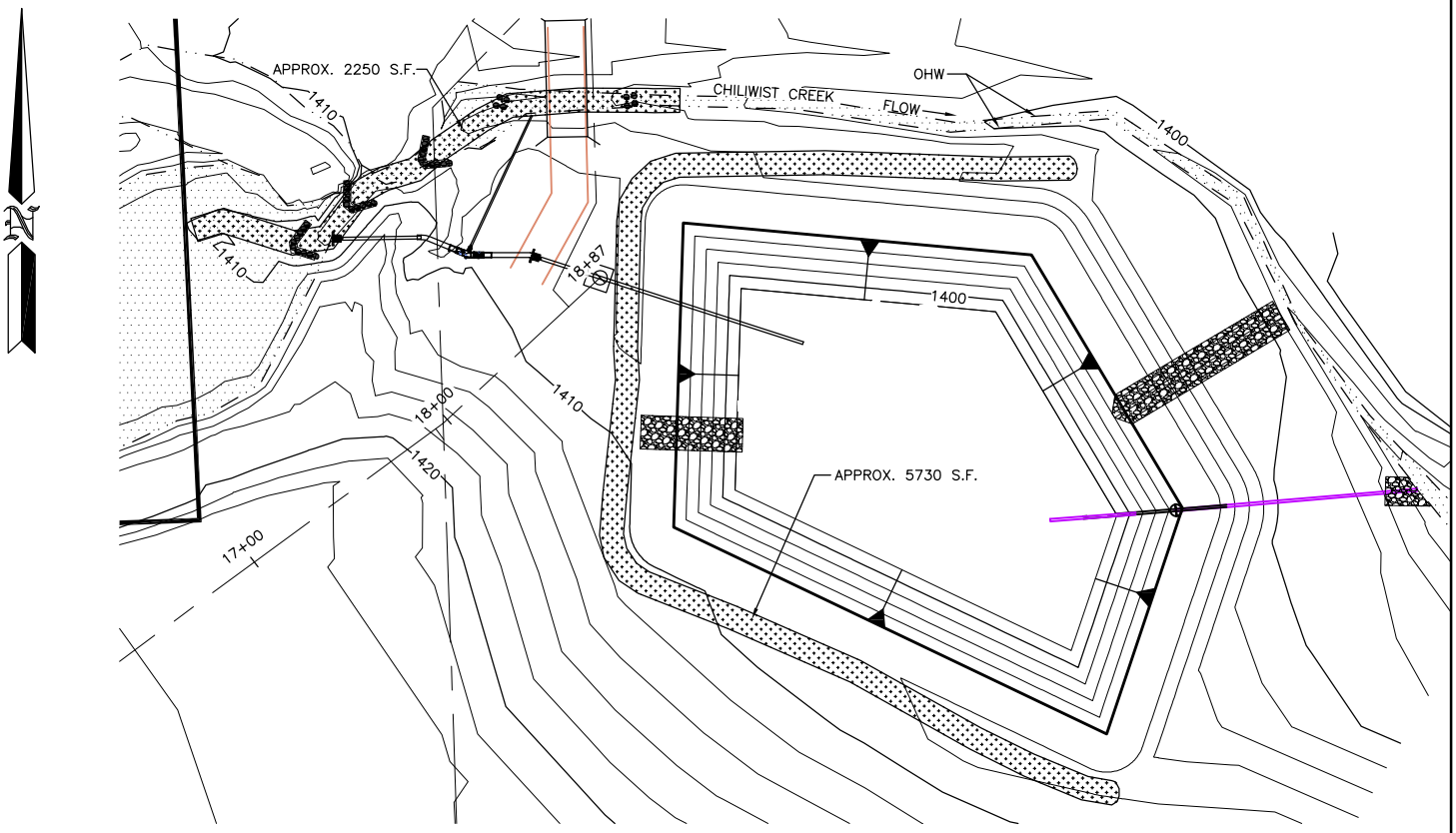

MITIGATION AREA 2 (LOWER POND)

SCALE: 1" = 80'

PLANTING SCHEDULE – MITIGATION AREA 2 (9320 SF)				
POND (5730 SF)				
COMMON NAME	SCIENTIFIC NAME	QUANTITY	SPACING	REMARKS
COYOTE WILLOW	SALIX EXIGUA	300	3 FEET ON CENTER	CUTTINGS (LIVE STAKE)
RED–OSIER DOGWOOD	CORNUS STOLONIFERA	300	3 FEET ON CENTER	CUTTINGS (LIVE STAKE)
STREAM (2250 SF)				
COYOTE WILLOW	SALIX EXIGUA	80	3 FEET ON CENTER	CUTTINGS (LIVE STAKE)
RED–OSIER DOGWOOD	CORNUS STOLONIFERA	80	3 FEET ON CENTER	CUTTINGS (LIVE STAKE)
MOCK ORANGE	PHILADELPHUS LEISII	30	4 FEET ON CENTER	1 GALLON CONTAINERS
SERVICEBERRY	AMELANCHIER ALNIFOLIA	30	4 FEET ON CENTER	1 GALLON CONTAINERS

REFERENCE NUMBER:

APPLICANT NAME:
WASHINGTON DEPT. of FISH & WILDLIFE

PROPOSED PROJECT:
STREAM RESTORATION

LOCATION: CHILIWIST WILDLIFE AREA

SHEET 17 OF 18 DATE: 11/27/2013

ENG. PROJECT NO. ON:R2:12–6

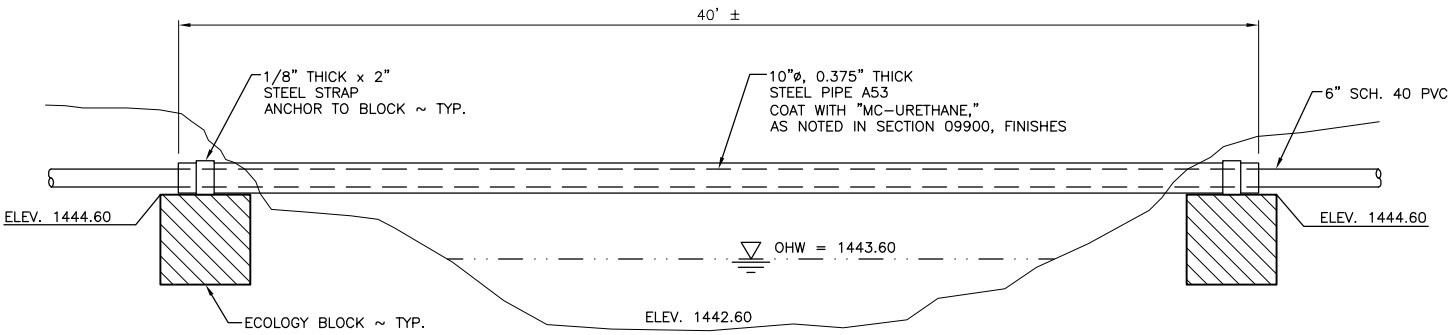

UPPER CREEK CROSSING DETAIL

NOT TO SCALE

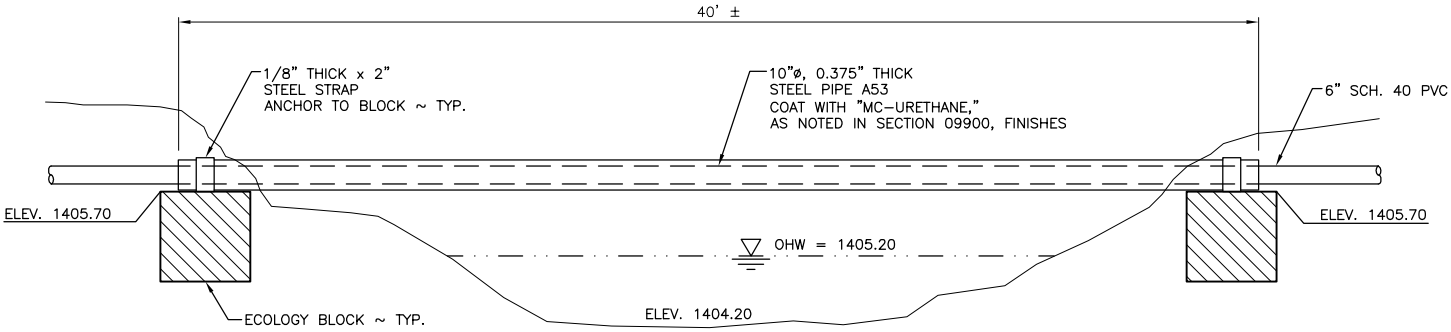

LOWER CREEK CROSSING DETAIL

NOT TO SCALE

REFERENCE NUMBER:

APPLICANT NAME:
WASHINGTON DEPT. of FISH & WILDLIFE

PROPOSED PROJECT:
STREAM RESTORATION

LOCATION: CHILIWIST WILDLIFE AREA

SHEET 18 OF 18 DATE: 11/27/2013

ENG. PROJECT NO. ON:R2:12-6