STATE MAP
NOT TO SCALE

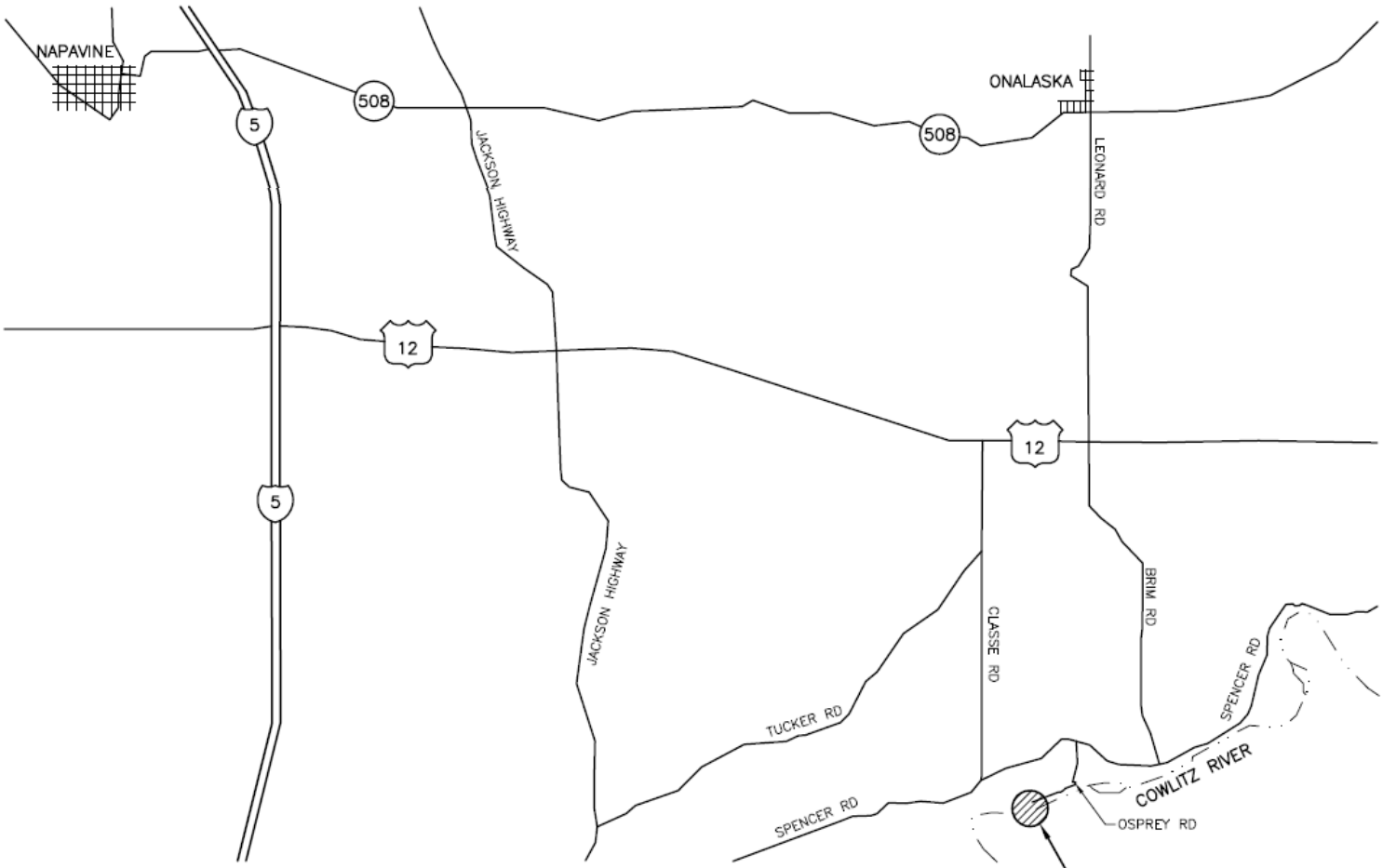

VICINITY MAP
NOT TO SCALE

ENG. PROJECT NO. LS:H129:14-1

PORTION OF: SECT. 31, T 12 N, R 1 E

REFERENCE NUMBER:

APPLICANT:
WASHINGTON DEPT. of FISH & WILDLIFE
600 CAPITOL WAY N.
OLYMPIA, WA 98501-1091

ADJACENT PROPERTY OWNER:
1.
2

PROJECT LOCATION (ADDRESS):
COWLITZ TROUT HATCHERY
165 OSPREY LANE
TOLEDO, WA

LAT/LONG: N 46°71'01"/W 122°43'47"
DATUM:
SHEET 1 OF 7 DATE: 3/12/2014

PROPOSED PROJECT:
ACCESSIBLE FISHING RENOVATION

IN: COWLITZ RIVER
NEAR/AT: ONALASKA
COUNTY: LEWIS
STATE: WA

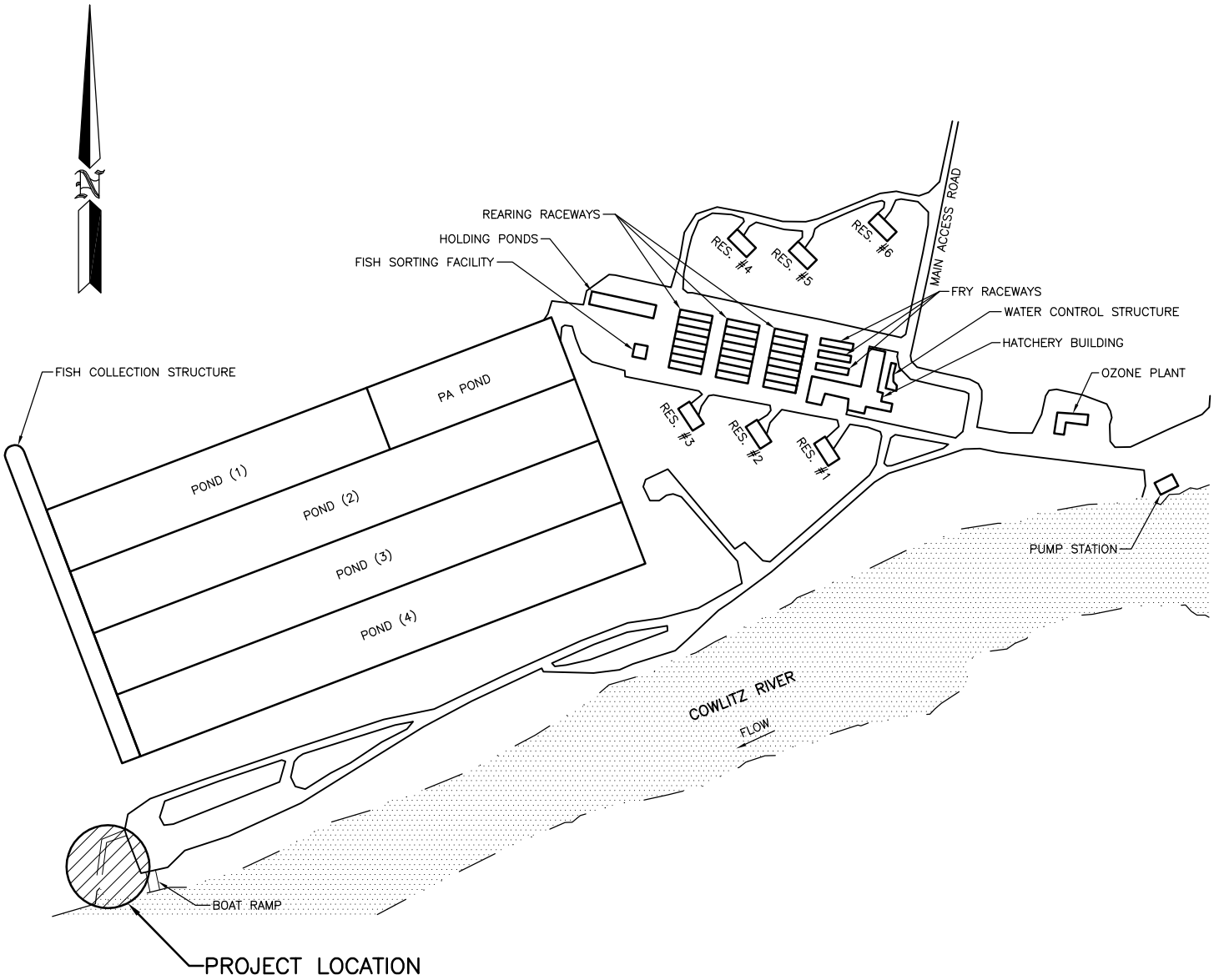

OVERALL SITE PLAN
NOT TO SCALE

REFERENCE NUMBER:
APPLICANT NAME:
WASHINGTON DEPT. of FISH & WILDLIFE
PROPOSED PROJECT:
ACCESSIBLE FISHING RENOVATION
LOCATION: COWLITZ TROUT HATCHERY
SHEET 2 OF 7 DATE: 3/12/2014

ENG. PROJECT NO. LS:H129:14-1

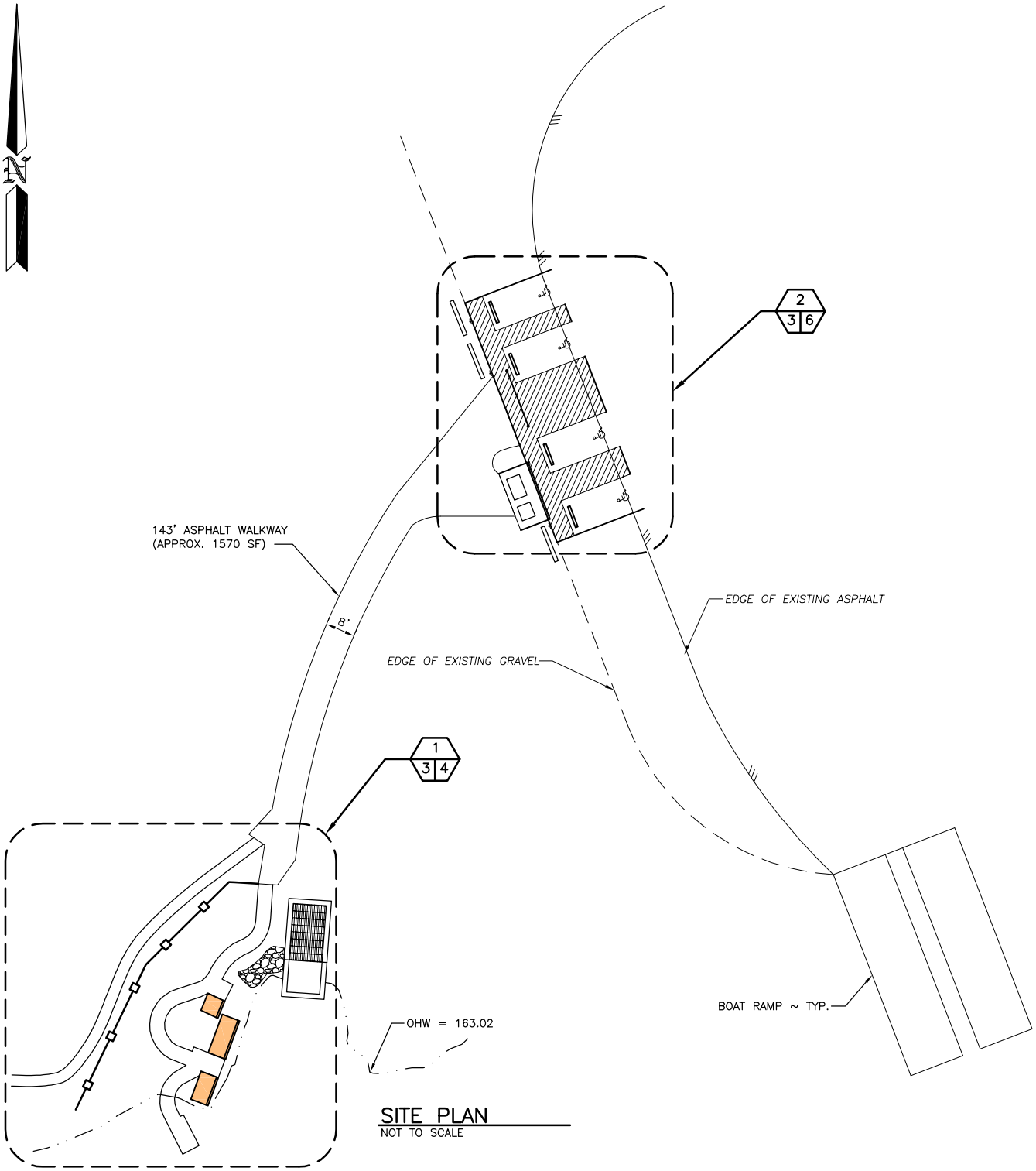

SITE PLAN
NOT TO SCALE

REFERENCE NUMBER:

APPLICANT NAME:
WASHINGTON DEPT. of FISH & WILDLIFE

PROPOSED PROJECT:
ACCESSIBLE FISHING RENOVATION

LOCATION: COWLITZ TROUT HATCHERY

SHEET 3 OF 7 DATE: 3/12/2014

ENG. PROJECT NO. LS:H129:14-1

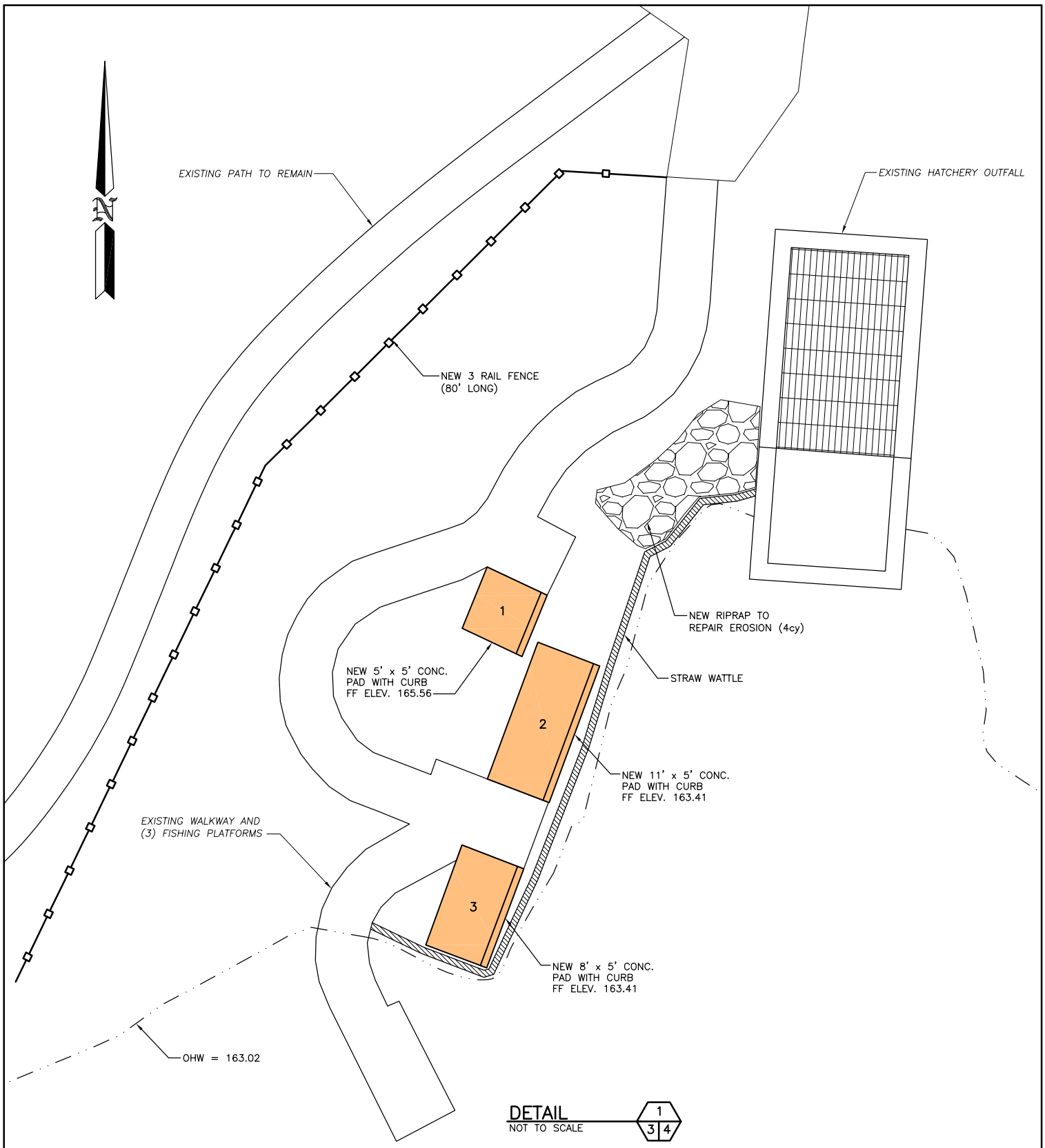

DETAIL 1/3 4
NOT TO SCALE

REFERENCE NUMBER:

APPLICANT NAME:
WASHINGTON DEPT. of FISH & WILDLIFE

PROPOSED PROJECT:
ACCESSIBLE FISHING RENOVATION

LOCATION: COWLITZ TROUT HATCHERY

SHEET 4 OF 7 DATE: 3/12/2014

ENG. PROJECT NO. LS:H129:14-1

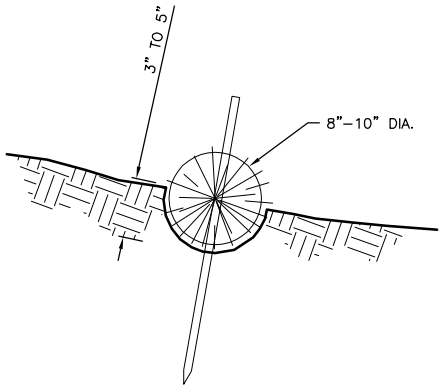

1" X 1" STAKE

STRAW WATTLE DETAIL

NOT TO SCALE

CONSTRUCTION SPECIFICATIONS:

1. PREPARE THE SLOPE BEFORE THE WATTLING PROCEDURE IS STARTED.
2. SHALLOW GULLIES SHOULD BE SMOOTHED AS WORK PROGRESSES.
3. DIG SMALL TRENCHES ACROSS THE SLOPE ON CONTOUR, TO PLACE ROLLS IN. THE TRENCH SHOULD BE DEEP ENOUGH TO ACCOMMODATE HALF THE THICKNESS OF THE ROLL. WHEN THE SOIL IS LOOSE AND UNCOMPACTED, THE TRENCH SHOULD BE DEEP ENOUGH TO BURY THE ROLL 2/3 OF ITS THICKNESS BECAUSE THE GROUND WILL SETTLE.
4. IT IS CRITICAL THAT ROLLS ARE INSTALLED PERPENDICULAR TO WATER MOVEMENT, PARALLEL TO THE SLOPE CONTOUR.
5. START BUILDING TRENCHES AND INSTALL ROLLS FROM THE BOTTOM OF THE SLOPE AND WORK UP.
6. CONSTRUCT TRENCHES AT CONTOUR INTERVALS OF 3–12 FEET APART DEPENDING ON STEEPNESS OF SLOPE. THE STEEPER THE SLOPE, THE CLOSER TOGETHER THE TRENCHES. 1:1=10' 3:1=30'
7. 2:1=20' 4:1=40'
8. LAY THE ROLL ALONG THE TRENCHES FITTING IT SNUGLY AGAINST THE SOIL. MAKE SURE NO GAPS EXIST BETWEEN THE SOIL AND THE STRAW WATTLE.
9. USE A STRAIGHT BAR TO DRIVE HOLES THROUGH THE WATTLE AND INTO THE SOIL FOR THE WILLOW OR WOODEN STAKES.
10. DRIVE THE STAKE THROUGH PREPARED HOLE INTO SOIL. LEAVE ONLY 1 OR 2 INCHES OF STAKE EXPOSED ABOVE ROLL.
11. IF USING WILLOW STAKES REFER TO LIVE STAKING BMP.
12. INSTALL STAKES AT LEAST EVERY 4 FEET APART THROUGH THE WATTLE. ADDITIONAL STAKES MAY BE DRIVEN ON THE DOWNSLOPE SIDE OF THE TRENCHES ON HIGHLY EROSIVE OR VERY STEEP SLOPES.
13. INSPECT THE STRAW ROLLS AND THE SLOPES AFTER SIGNIFICANT STORMS. MAKE SURE THE ROLLS ARE IN CONTACT WITH THE SOIL.
14. REPAIR ANY RILLS OR GULLYS PROMPTLY.
15. RESEED OR REPLANT VEGETATION IF NECESSARY UNTIL THE SLOPE IS STABILIZED.

GENERAL EROSION AND SEDIMENTATION CONTROL NOTES

A. THE FOLLOWING EROSION AND SEDIMENTATION CONTROL NOTES APPLY TO ALL CONSTRUCTION SITE ACTIVITIES AT ALL TIMES, UNLESS OTHERWISE SPECIFIED ON THESE PLANS:

B. APPROVAL OF THIS EROSION AND SEDIMENTATION CONTROL PLAN DOES NOT CONSTITUTE AN ACCEPTANCE OF THE PERMANENT ROAD OR DRAINAGE DESIGN.

C. THE OWNER AND HIS/HER CONTRACTOR SHALL BE RESPONSIBLE AT ALL TIMES FOR PREVENTING SILT–LADEN RUNOFF FROM DISCHARGING FROM THE PROJECT SITE. FAILURE BY THE OWNER AND/OR CONTRACTOR CAN RESULT IN A FINE. THE DESIGNATED TEMPORARY CONTACT PERSON NOTED ON THIS PLAN MUST BE AVAILABLE FOR CONTACT BY TELEPHONE ON A 24 HOUR BASIS THROUGHOUT CONSTRUCTION AND UNTIL THE PROJECT HAS BEEN COMPLETED AND ACCEPTED BY THE COUNTY.

D. THE IMPLEMENTATION OF THESE ESC PLANS AND THE CONSTRUCTION, MAINTENANCE, REPLACEMENT AND UPGRADING OF THESE FACILITIES IS THE RESPONSIBILITY OF THE OWNER AND/OR CONTRACTOR FROM THE BEGINNING OF CONSTRUCTION UNTIL ALL CONSTRUCTION IS COMPLETED AND ACCEPTED AND ACCEPTED BY THE COUNTY AND THE SITE IS STABILIZED.

E. PRIOR TO BEGINNING ANY WORK ON THE PROJECT SITE, A PRECONSTRUCTION CONFERENCE MUST BE HELD, AND SHALL BE ATTENDED BY THE GENERAL CONTRACTOR, THE PROJECT ENGINEER, REPRESENTATIVES FROM AFFECTED UTILITIES, AND A REPRESENTATIVE OF KITSAP COUNTY.

F. THE EROSION AND SEDIMENTATION CONTROL FACILITIES SHOWN ON THIS PLAN ARE TO BE CONSIDERED ADEQUATE BASIC REQUIREMENTS FOR THE ANTICIPATED SITE CONDITIONS. DURING CONSTRUCTION, DEVIATIONS FROM THIS PLAN MAY BE NECESSARY IN ORDER TO MAINTAIN WATER QUALITY. MINOR DEPARTURES FROM THIS PLAN ARE PERMITTED SUBJECT TO THE APPROVAL OF THE COUNTY INSPECTOR. HOWEVER, EXCEPT FOR EMERGENCY SITUATIONS, ALL OTHER DEVIATIONS FROM THIS PLAN MUST BE DESIGNED BY THE PROJECT ENGINEER AND APPROVED BY KITSAP COUNTY PRIOR TO INSTALLATION.

G. ALL EROSION AND SEDIMENTATION CONTROL MEASURES SHALL BE INSPECTED BY THE OWNER AND/OR CONTRACTOR ON A FREQUENT BASIS AND IMMEDIATELY AFTER EACH RAINFALL, AND MAINTAINED AS NECESSARY TO INSURE THEIR CONTINUED FUNCTIONING. ALL SEDIMENT MUST BE REMOVED FROM SILT FENCES, STRAW BALES, SEDIMENT PONDS, ETC. PRIOR TO THE SEDIMENT REACHING 2 ITS MAXIMUM POTENTIAL DEPTH.

H. AT NO TIME SHALL CONCRETE, CONCRETE BY–PRODUCTS, VEHICLE FLUIDS, PAINT, CHEMICALS, OR OTHER POLLUTING MATTER BE PERMITTED TO DISCHARGE TO THE TEMPORARY OR PERMANENT DRAINAGE SYSTEM, OR TO DISCHARGE FROM THE PROJECT SITE.

I. PERMANENT DETENTION/RETENTION PONDS, PIPES, TANKS OR VAULTS MAY ONLY BE USED FOR SEDIMENT CONTAINMENT WHEN SPECIFICALLY INDICATED ON THESE PLANS.

J. ALL EXPOSED SURFACES SHALL BE REVEGETATED WITHIN 30 DAYS OF AREA COMPLETION. COMPLETION INCLUDES ALL SLOPES TO FINISH CONTOUR AND ALL CLEARED AREAS, NOT GRAVELED, SMOOTH, AND CLEAR OF DEBRIS TO THE SATISFACTION OF THE ENGINEER.

K. REVEGETATION SHALL MEAN BROADCAST SEEDING, HYDRO–SEEDING, OR SODDING AND SHALL CONFORM TO STANDARDS SET FORTH IN THE SPECIFICATIONS.

L. REVEGETATE WITH PLANT TYPES LISTED ON DRAWINGS.

M. MULCHING AND MATTING SHALL BE UTILIZED DURING PERIODS OF CONSTRUCTION DELAYS OR WINTER DOWNTIME FOR TEMPORARILY PROTECTING EXPOSED SOILS.

N. FILTER FENCING SHALL BE INSTALLED WHERE SHOWN ON THE PLAN OR AS DIRECTED BY THE ENGINEER PRIOR TO COMMENCEMENT OF WORK. ALL FENCING SHALL BE INSPECTED DAILY DURING CONSTRUCTION AND AFTER EACH SIGNIFICANT RAINFALL EVENT UNTIL SITE HAS BEEN PERMANENTLY STABILIZED. ANY REQUIRED REPAIRS SHALL BE MADE IMMEDIATELY.

O. FILTER FABRIC SHALL BE INSTALLED TO FOLLOW CONTOURS. FENCE POSTS SHALL BE SPACED A MAXIMUM OF EIGHT (8) FEET APART UNLESS OTHERWISE SHOWN HEREIN. ALL POSTS SHALL BE DRIVEN INTO THE GROUND A MINIMUM OF 30 INCHES.

REFERENCE NUMBER:

APPLICANT NAME:
WASHINGTON DEPT. of FISH & WILDLIFE

PROPOSED PROJECT:
ACCESSIBLE FISHING RENOVATION

LOCATION: COWLITZ TROUT HATCHERY

SHEET 5 OF 7 DATE: 3/12/2014

ENG. PROJECT NO. LS:H129:14–1

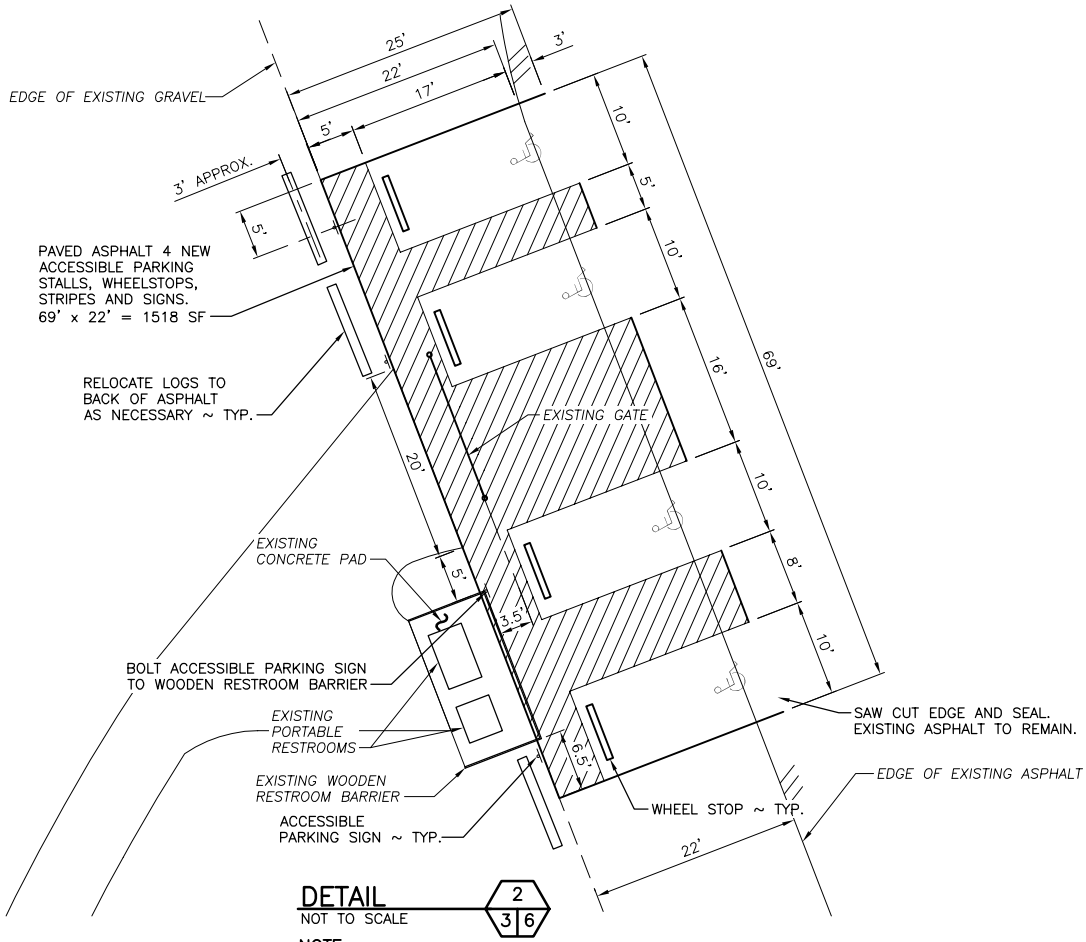

DETAIL 2/3 6

NOT TO SCALE

NOTE:

REMOVE AND DISPOSE OF EXISTING PARKING SIGNS

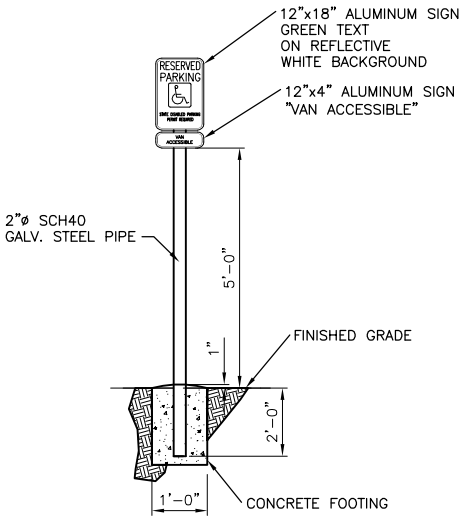

ACCESSIBLE PARKING SIGN

NOT TO SCALE

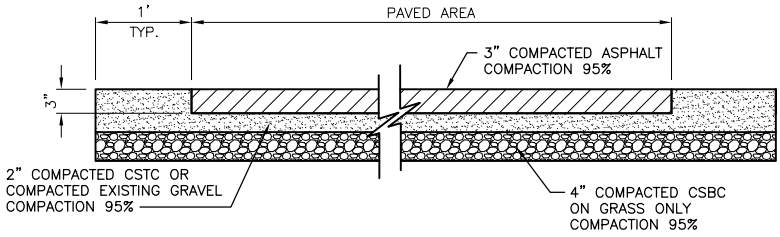

PAVEMENT SECTION

NOT TO SCALE

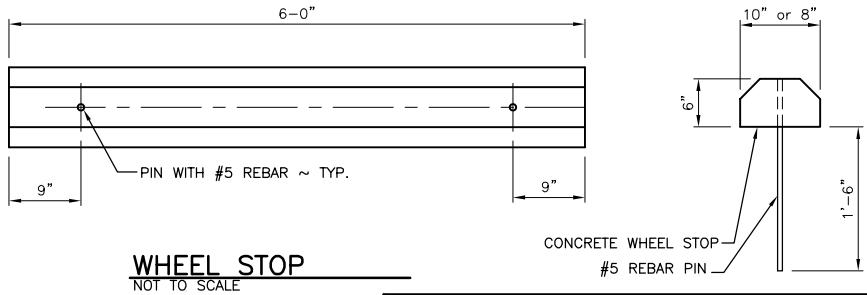

WHEEL STOP

NOT TO SCALE

REFERENCE NUMBER:

APPLICANT NAME:
WASHINGTON DEPT. of FISH & WILDLIFE

PROPOSED PROJECT:
ACCESSIBLE FISHING RENOVATION

LOCATION: COWLITZ TROUT HATCHERY

SHEET 6 OF 7 DATE: 3/12/2014

ENG. PROJECT NO. LS:H129:14-1

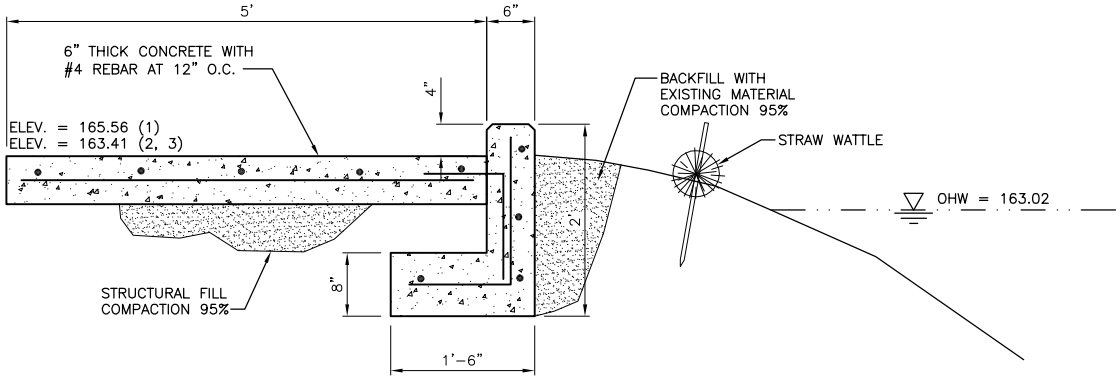

TYPICAL FISHING PAD SECTION

SCALE: 1" = 2'

REFERENCE NUMBER:

APPLICANT NAME:
WASHINGTON DEPT. of FISH & WILDLIFE

PROPOSED PROJECT:
ACCESSIBLE FISHING RENOVATION

LOCATION: COWLITZ TROUT HATCHERY

SHEET 7 OF 7 DATE: 3/12/2014

ENG. PROJECT NO. LS:H129:14-1