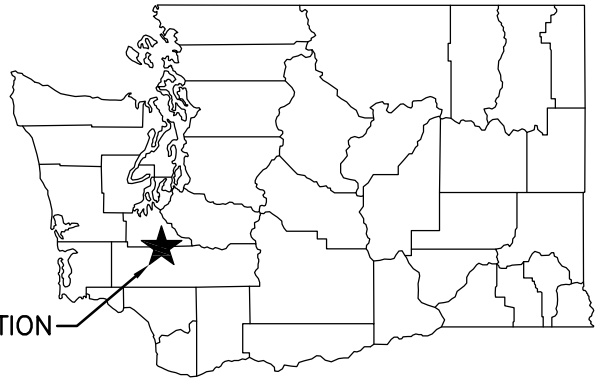

STATE MAP
NOT TO SCALE

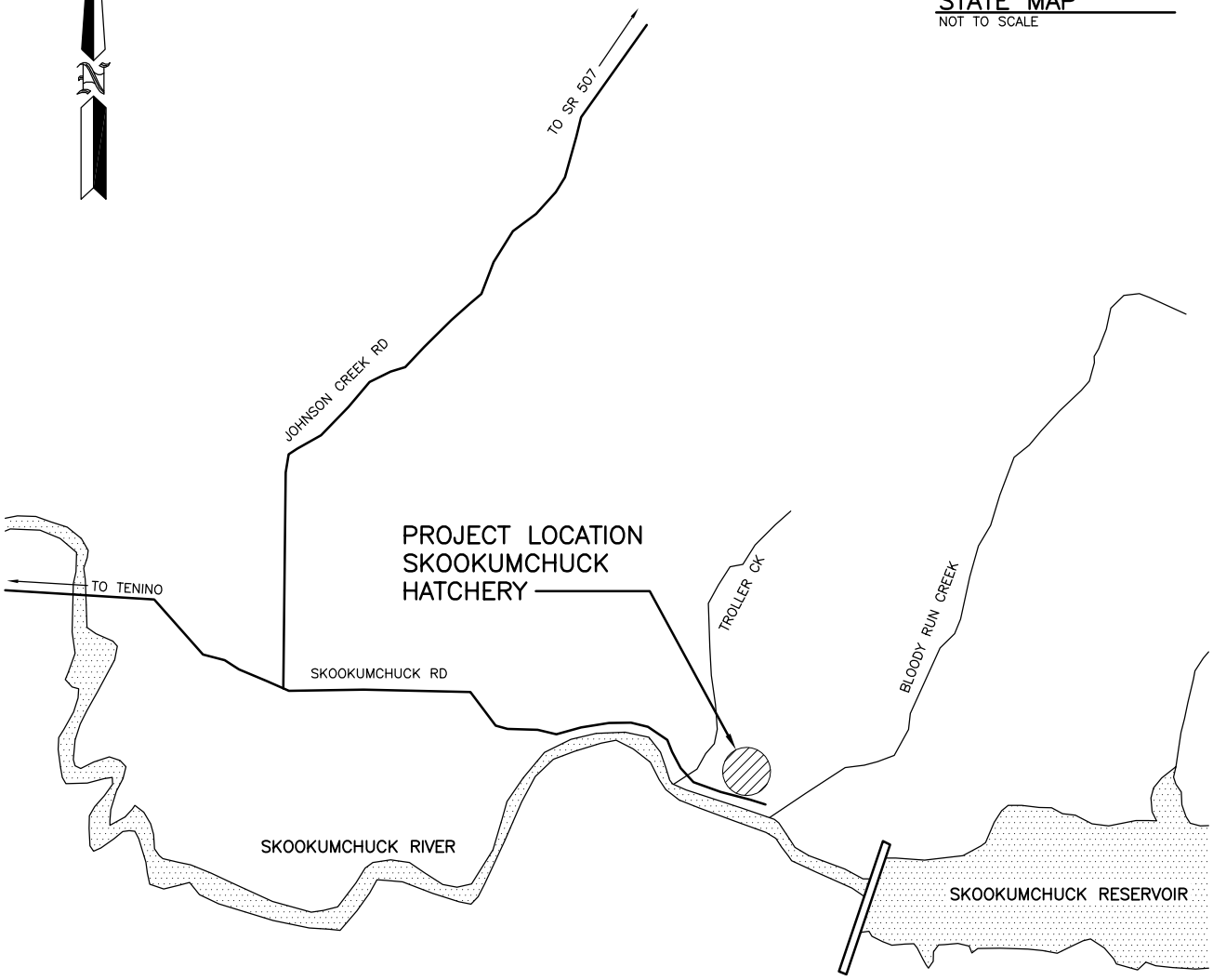

VICINITY MAP
NOT TO SCALE

ENG. PROJECT NO. TN:H41:14–1

PORTION OF: SECT. 18, T 15 N, R 1 E

REFERENCE NUMBER:

APPLICANT:
WASHINGTON DEPT. of FISH & WILDLIFE
600 CAPITOL WAY N.
OLYMPIA, WA 98501–1091

ADJACENT PROPERTY OWNER:
1.
2

PROJECT LOCATION (ADDRESS):
SKOOKUMCHUCK HATCHERY
P.O. BOX 149
TENINO, WA 98589

LAT/LONG: 46.7901/–122.7246
DATUM: NGVD 29
SHEET 1 OF 14 DATE: 5/9/2014

PROPOSED PROJECT:
CULVERT REPLACEMENT

IN: SKOOKUMCHUCK RIVER
NEAR/AT: TENINO
COUNTY: THURSTON
STATE: WA

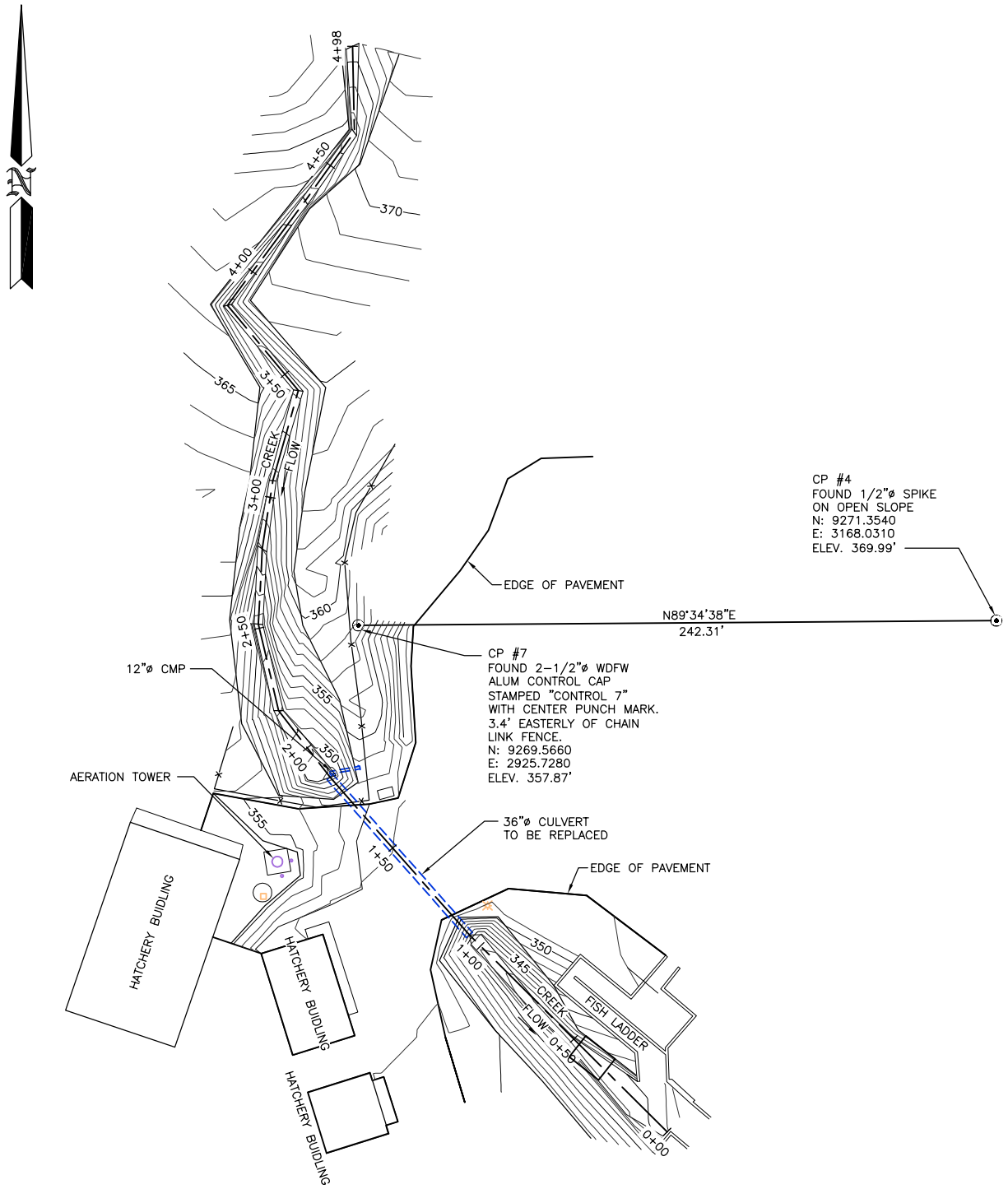

EXISTING SITE PLAN

SCALE: 1" = 60'

REFERENCE NUMBER:

APPLICANT NAME:
WASHINGTON DEPT. of FISH & WILDLIFE

PROPOSED PROJECT:
CULVERT REPLACEMENT

LOCATION: SKOOKUMCHUCK HATCHERY

SHEET 2 OF 14 DATE: 5/9/2014

ENG. PROJECT NO. TN:H41:14-1

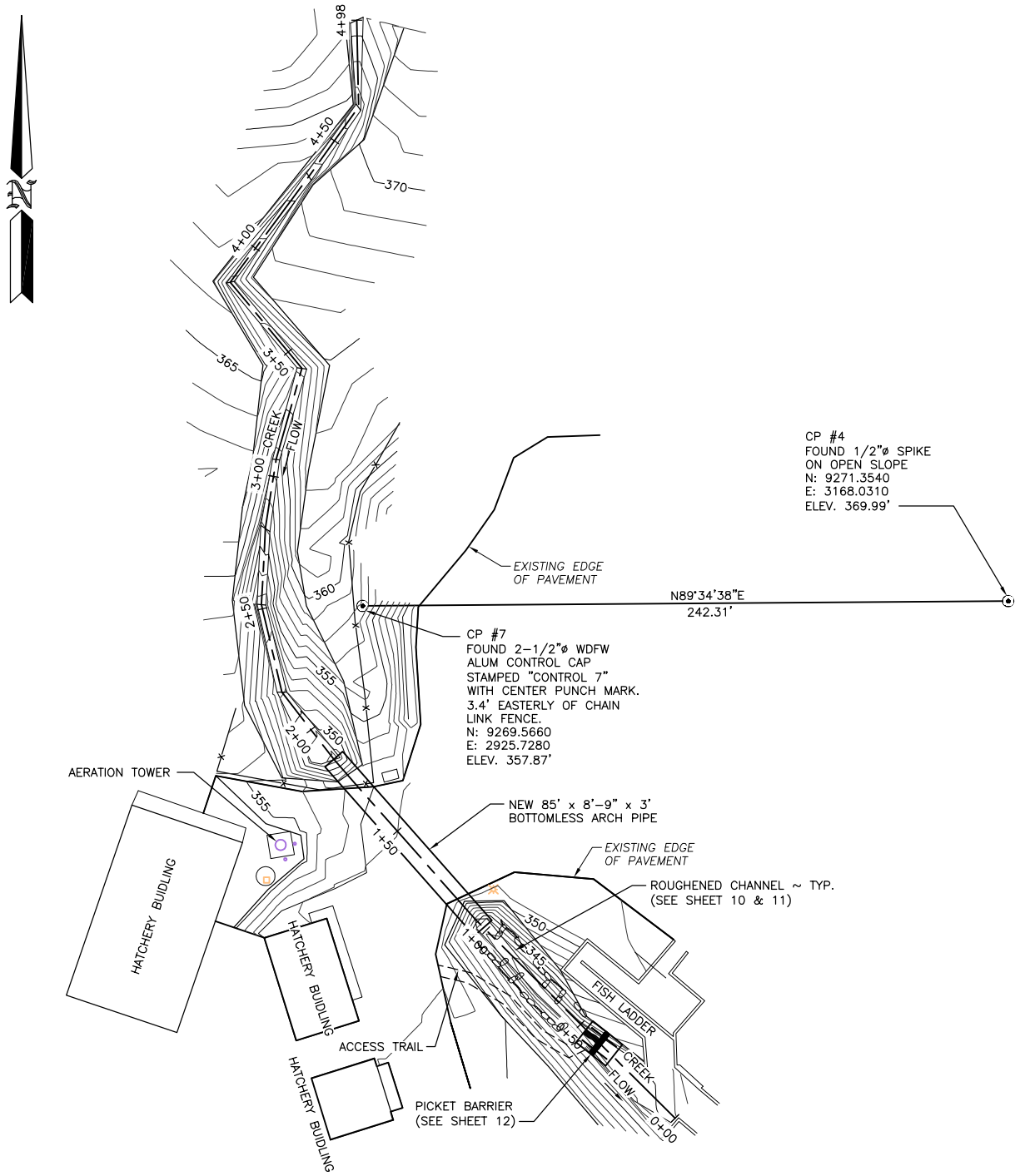

PROPOSED SITE PLAN

SCALE: 1" = 60'

REFERENCE NUMBER:

APPLICANT NAME:
WASHINGTON DEPT. of FISH & WILDLIFE

PROPOSED PROJECT:
CULVERT REPLACEMENT

LOCATION: SKOOKUMCHUCK HATCHERY

SHEET 3 OF 14 DATE: 5/9/2014

ENG. PROJECT NO. TN:H41:14-1

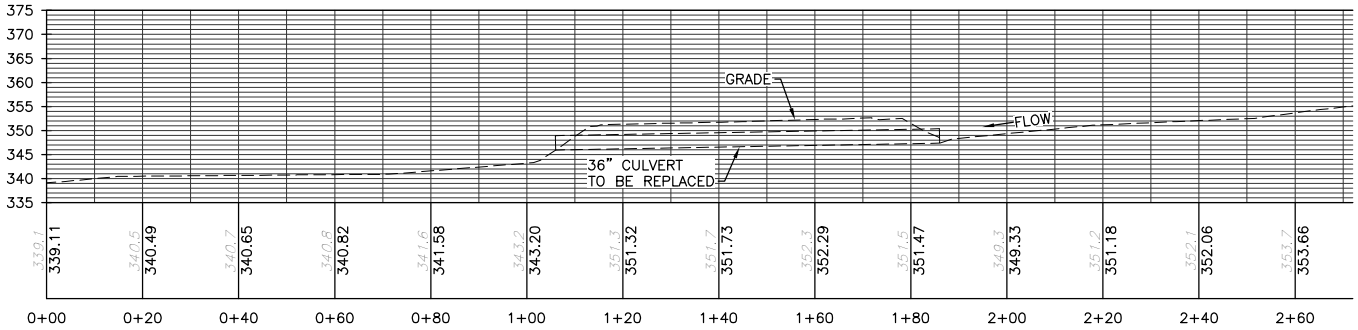

EXISTING CULVERT PROFILE

SCALE: 1" = 40'

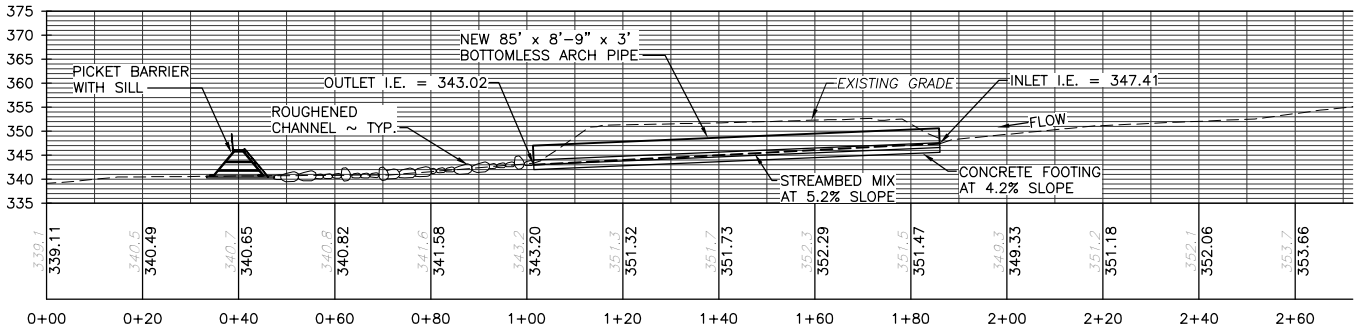

PROPOSED CULVERT PROFILE

SCALE: 1" = 40'

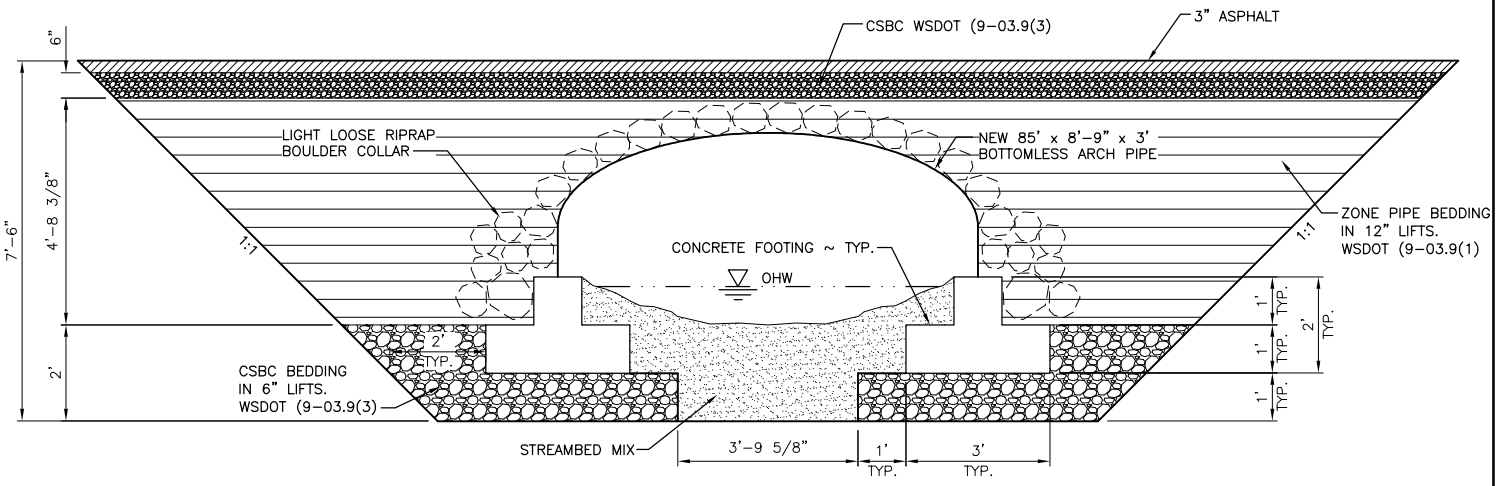

TYPICAL CULVERT SECTION

SCALE: 3" = 1'-0"

QUANTITIES				
MATERIAL	CUT		FILL	
–	ABOVE OHW	BELOW OHW	ABOVE OHW	BELOW OHW
NATIVE MATERIAL	–346 CY	–145 CY	–	–
ASPHALT	–	–	22 CY	–
CSBC	–	–	45 CY	–
ZONE PIPE BEDDING	–	–	210 CY	22 CY
CSBC BEDDING	–	–	–	50 CY
STREAMBED MIX	–	–	–	37 CY

ENG. PROJECT NO. TN:H41:14-1

REFERENCE NUMBER:

APPLICANT NAME:
WASHINGTON DEPT. of FISH & WILDLIFE

PROPOSED PROJECT:
CULVERT REPLACEMENT

LOCATION: SKOOKUMCHUCK HATCHERY

SHEET 4 OF 14 DATE: 5/9/2014

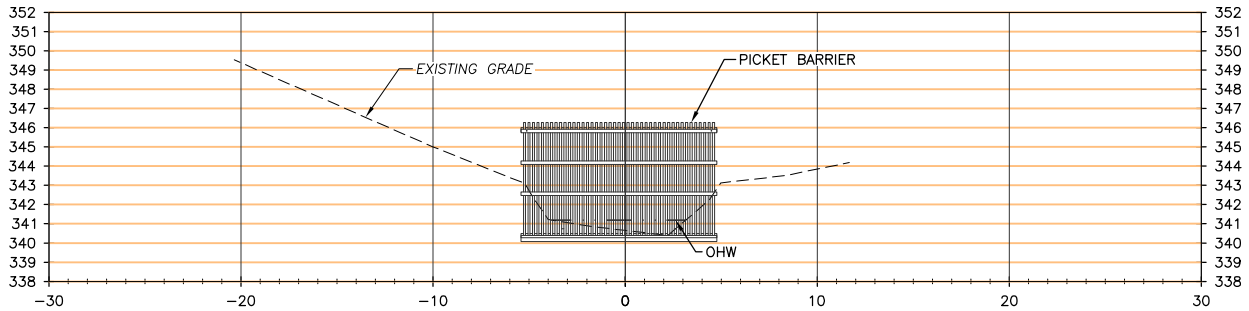

0+40

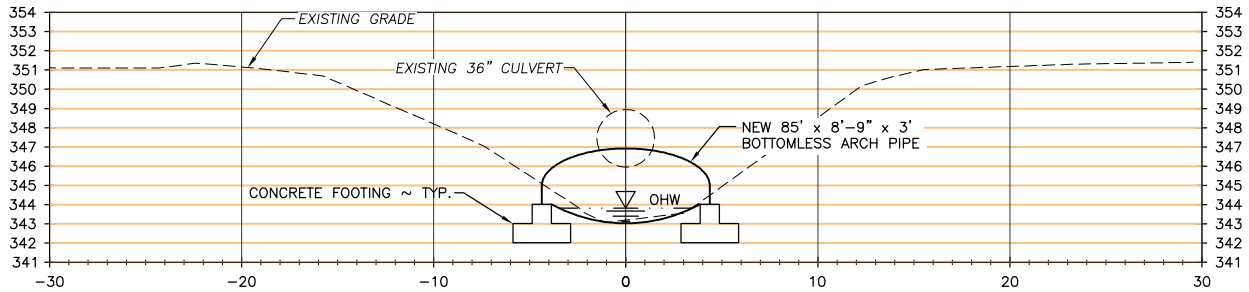

1+00

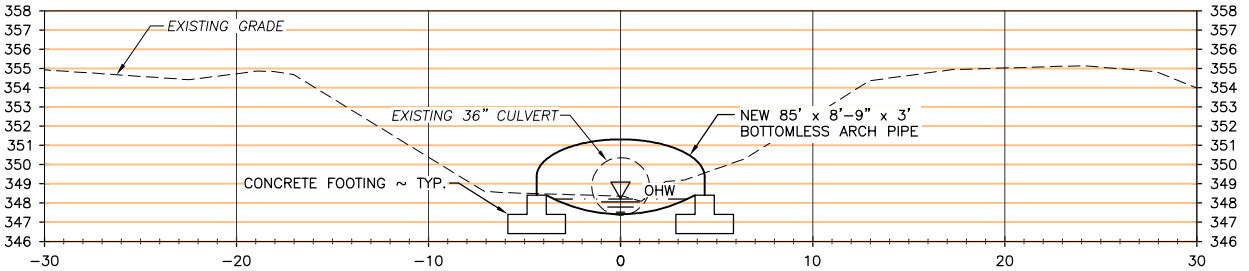

1+90

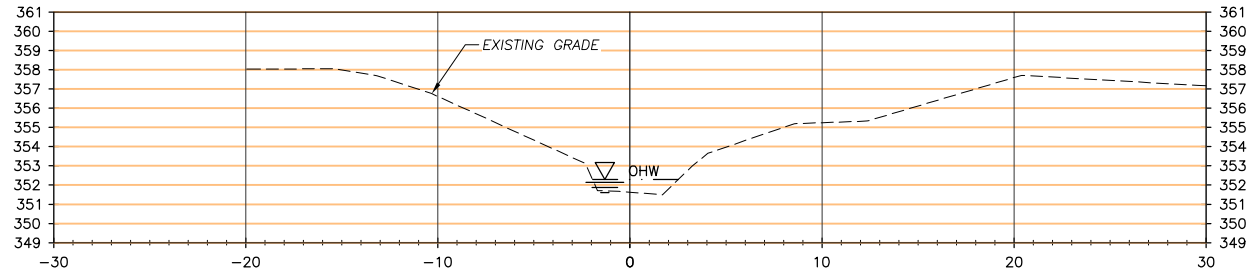

2+30

SECTIONS

SCALE: 1" = 10'

NOTE:

ORDINARY HIGH WATER
DEPTH 0.5' TO 0.8'

REFERENCE NUMBER:

APPLICANT NAME:
WASHINGTON DEPT. of FISH & WILDLIFE

PROPOSED PROJECT:
CULVERT REPLACEMENT

LOCATION: SKOOKUMCHUCK HATCHERY

SHEET 5 OF 14 DATE: 5/9/2014

ENG. PROJECT NO. TN:H41:14-1

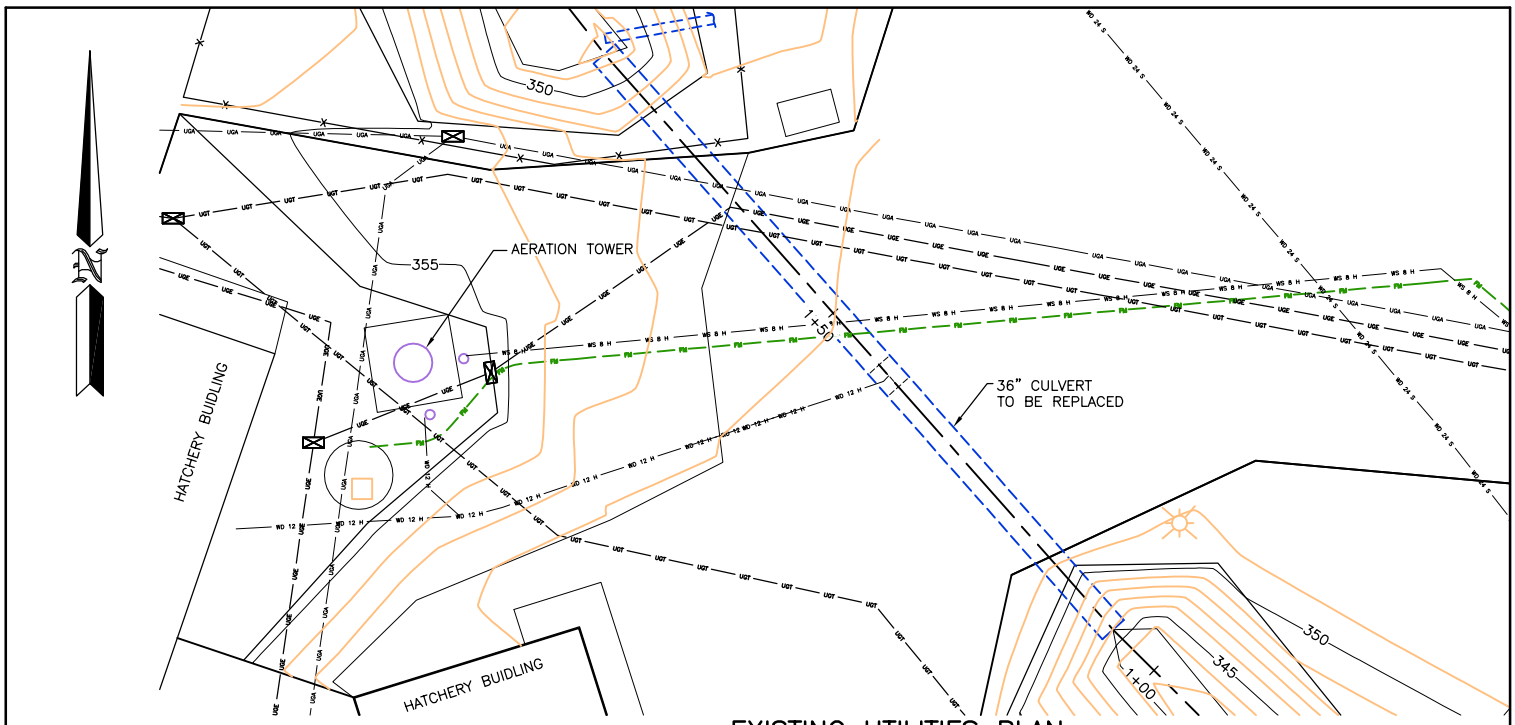

EXISTING UTILITIES PLAN

SCALE: 1" = 20'

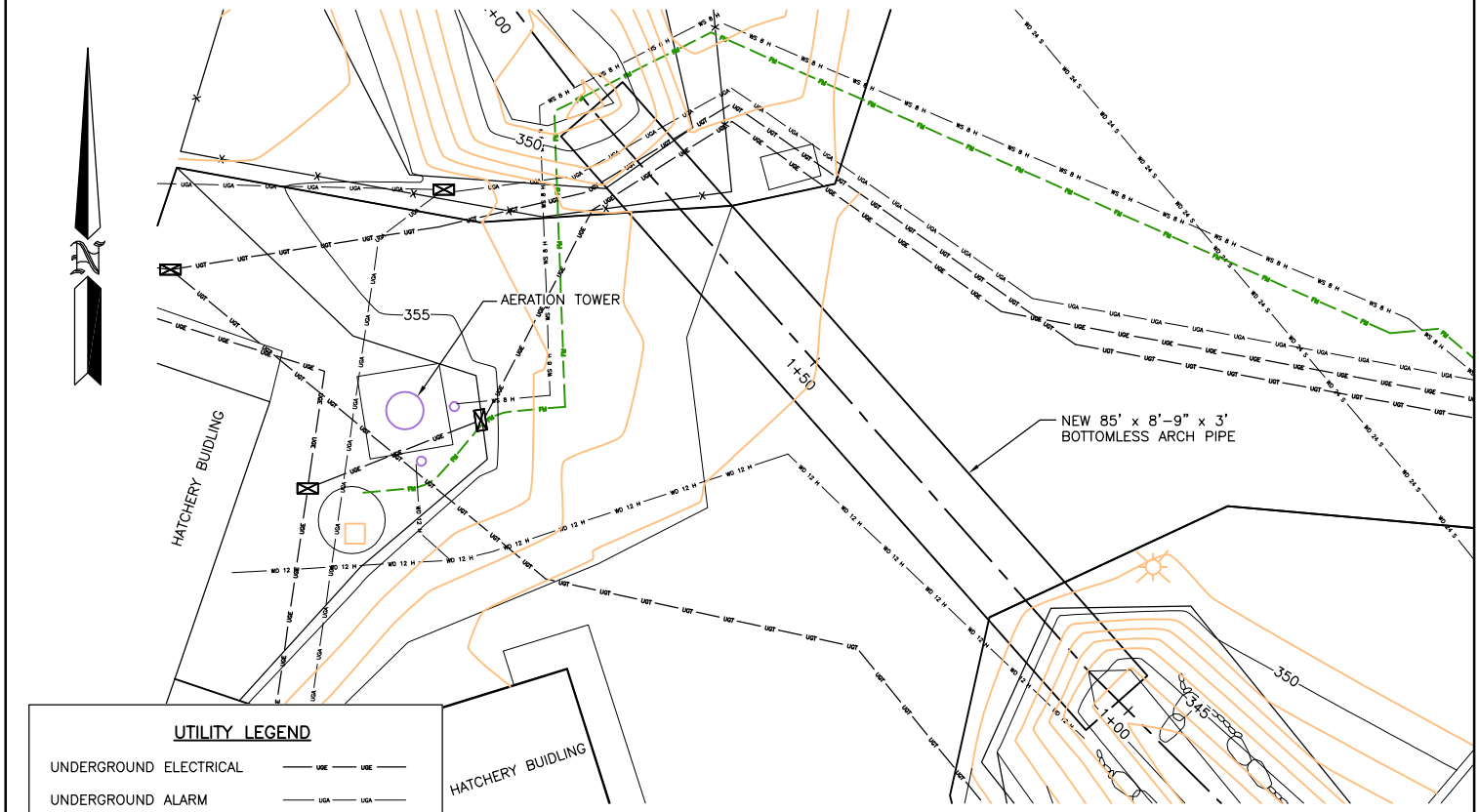

PROPOSED UTILITIES PLAN

SCALE: 1" = 20'

UTILITY LEGEND

UNDERGROUND ELECTRICAL	UGE
UNDERGROUND ALARM	UGA
UNDERGROUND TELEPHONE	UGT
CLEAN FORCE DRAIN	FM
8" HDPE SUPPLY	WS 8 H
12" HDPE DRAIN	WD 12 H
24" STEEL DRAIN	WD 24 S
VALVES	X

REFERENCE NUMBER:

APPLICANT NAME:
WASHINGTON DEPT. of FISH & WILDLIFE

PROPOSED PROJECT:
CULVERT REPLACEMENT

LOCATION: SKOOKUMCHUCK HATCHERY

SHEET 6 OF 14 DATE: 5/9/2014

ENG. PROJECT NO. TN:H41:14-1

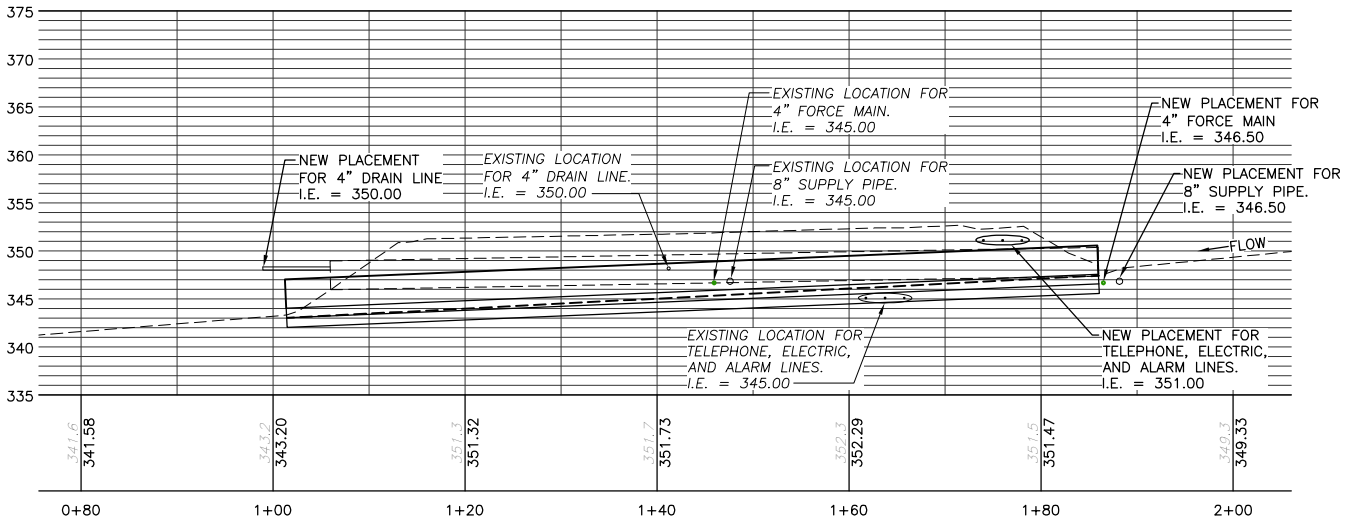

UTILITIES PROFILE

SCALE: 1" = 10'

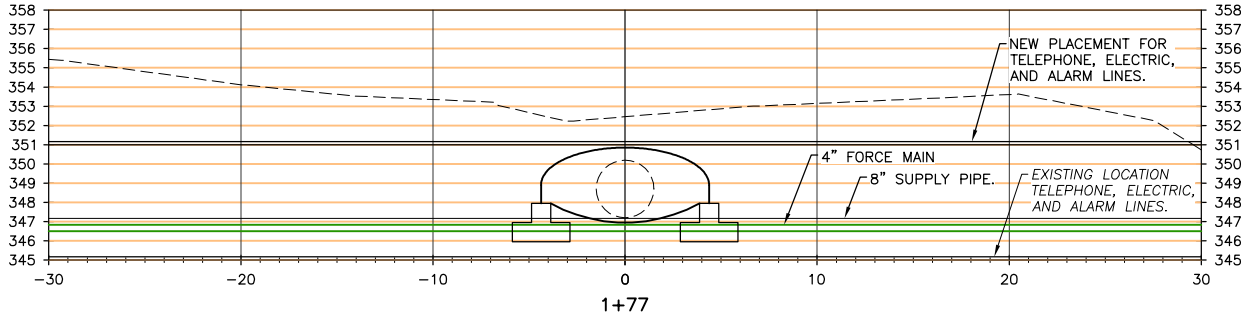

UTILITIES SECTION

SCALE: 1" = 10'

REFERENCE NUMBER:

APPLICANT NAME:
WASHINGTON DEPT. of FISH & WILDLIFE

PROPOSED PROJECT:
CULVERT REPLACEMENT

LOCATION: SKOOKUMCHUCK HATCHERY

SHEET 7 OF 14 DATE: 5/9/2014

ENG. PROJECT NO. TN:H41:14−1

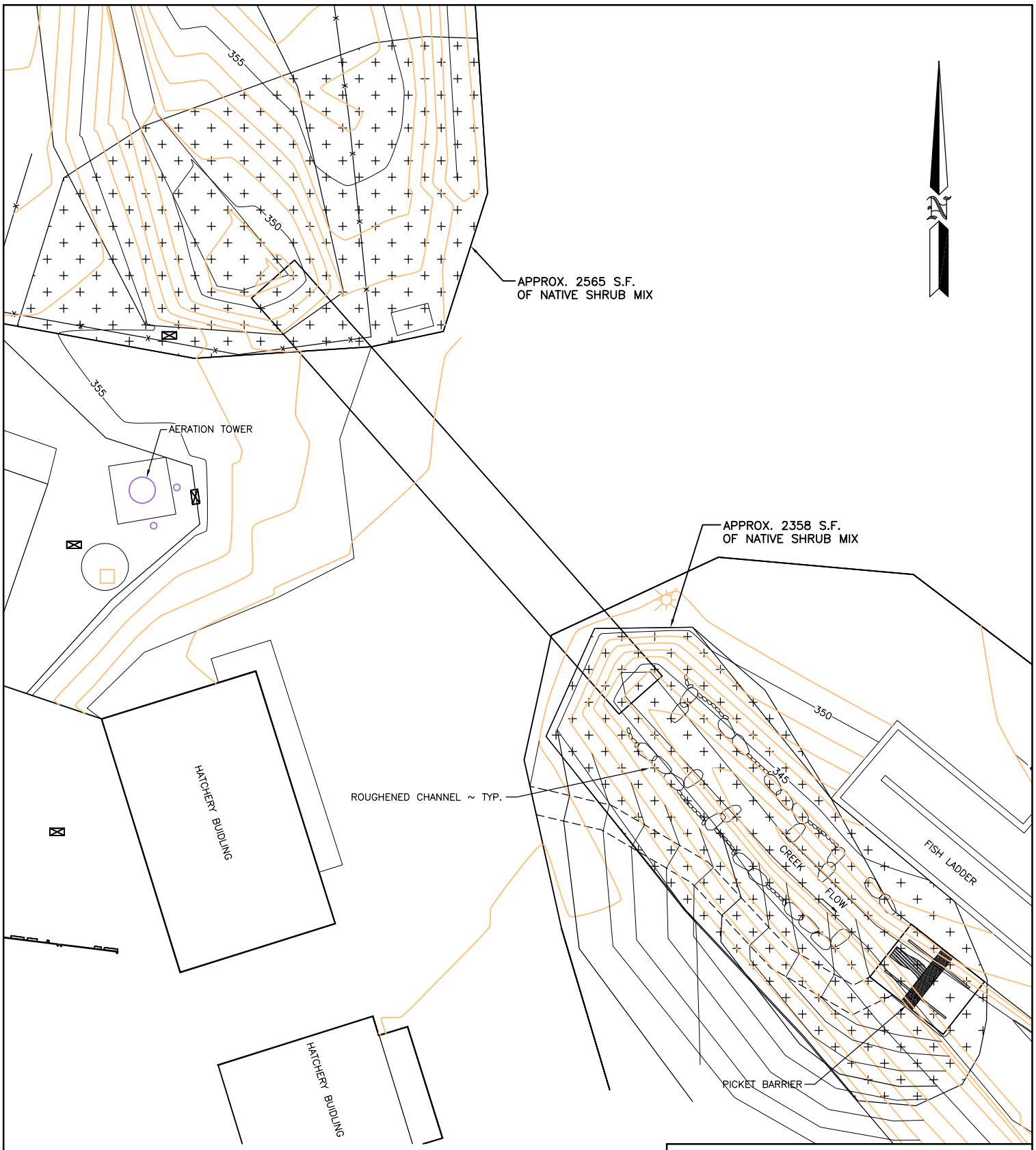

PLANTING PLAN

SCALE: 1" = 20'

REFERENCE NUMBER:

APPLICANT NAME:
WASHINGTON DEPT. of FISH & WILDLIFE

PROPOSED PROJECT:
CULVERT REPLACEMENT

LOCATION: SKOOKUMCHUCK HATCHERY

SHEET 8 OF 14 DATE: 5/9/2014

ENG. PROJECT NO. TN:H41:14-1

GENERAL NOTE:

STREAM IS EXPECTED TO BE DRY IN AUGUST AND SEPTEMBER

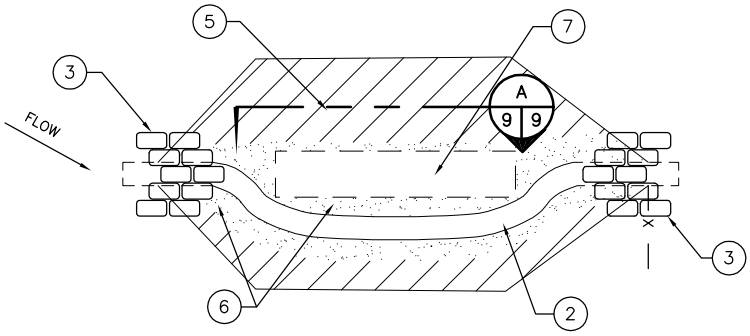

PLAN

CULVERT REMOVAL FLOW DIVERSION

NOT TO SCALE

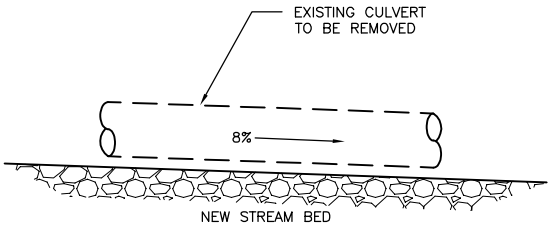

SECTION

NOT TO SCALE

A
9 9

CULVERT REMOVAL WITH FLOW DIVERSION NOTES:

1. ALL WORK SHALL BE IN ACCORDANCE WITH HPA.
2. DIVERSION SHALL BE 24" x 60' SINGLE WALL POLYETHYLENE PIPE OR SIMILAR AS APPROVED BY ENGINEER.
3. PLACE BAGS FILLED WITH PEA GRAVEL TO SEAL INLET AND OUTLET BYPASS.
4. DIVERSION SHALL BE APPROVED BY INSPECTOR PRIOR TO REMOVING CMP.
5. EXCAVATE FILL.
6. EXCAVATE AREA BEHIND BAGS AND UNDER CULVERT BY HAND.
7. CAREFULLY REMOVE CULVERT AND DISPOSE OF OFF SITE.
8. COVER ALL EXPOSED SOIL WITH STRAW MULCH AND GRASS SEED, PLACE BRUSH AND BRANCHES REMOVED DURING EXCAVATION ALONG STREAM EDGES AND IN STREAM BED WITHIN THE NEW CHANNEL AREA.
9. REMOVE SANDBAGS BY HAND.
10. REMOVE 24"ø BYPASS.

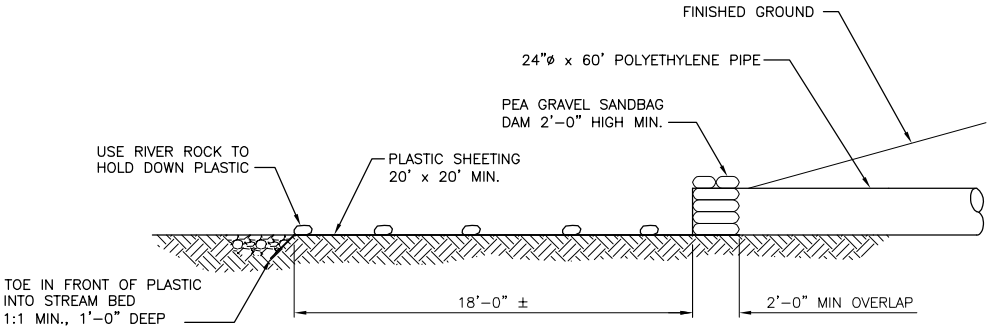

SIDE

DIVERSION DIAGRAM

NOT TO SCALE

REFERENCE NUMBER:

APPLICANT NAME:
WASHINGTON DEPT. of FISH & WILDLIFE

PROPOSED PROJECT:
CULVERT REPLACEMENT

LOCATION: SKOOKUMCHUCK HATCHERY

SHEET 9 OF 14 DATE: 5/9/2014

ENG. PROJECT NO. TN:H41:14-1

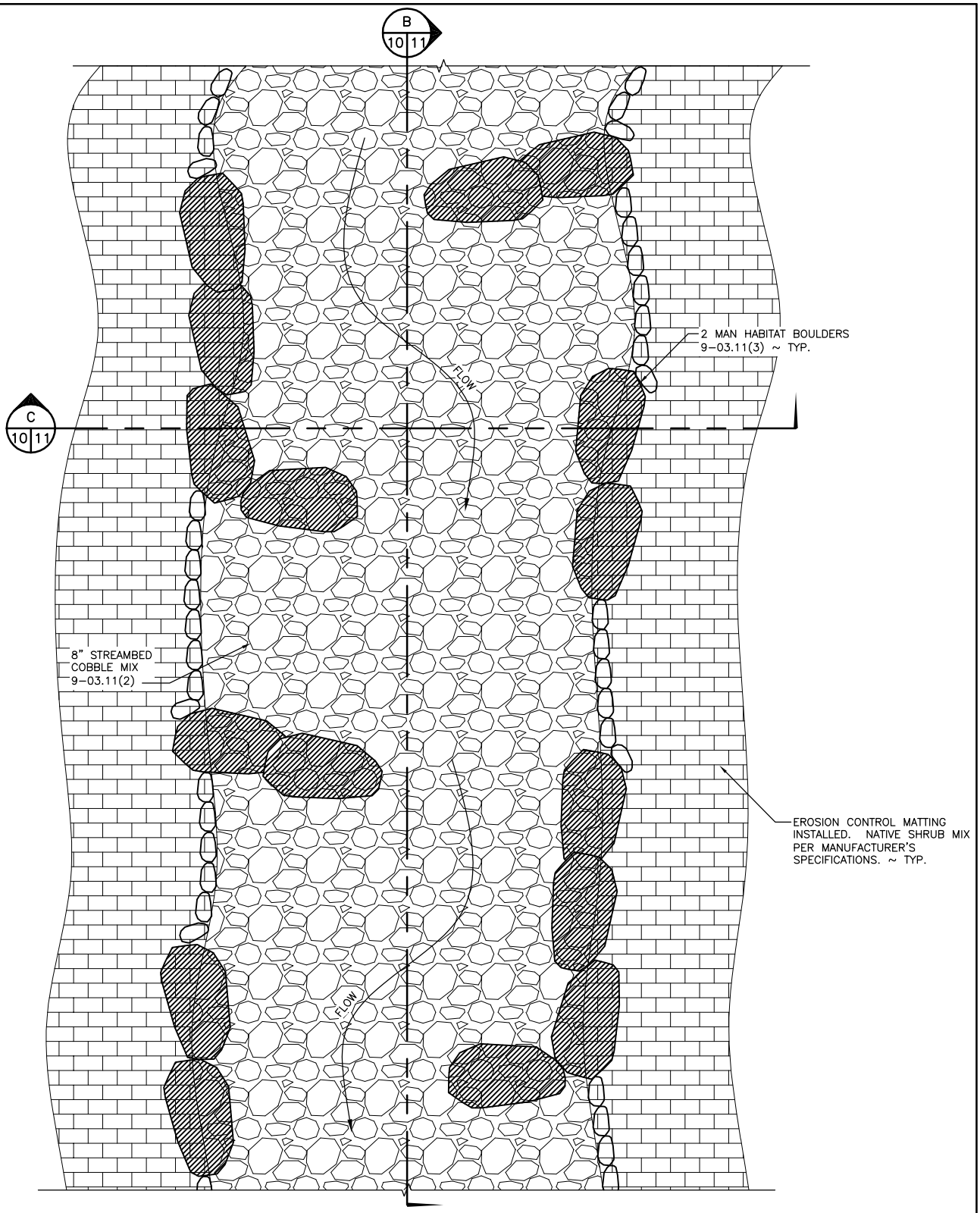

ROUGHENED CHANNEL DETAIL

NOT TO SCALE

REFERENCE NUMBER:

APPLICANT NAME:
WASHINGTON DEPT. of FISH & WILDLIFE

PROPOSED PROJECT:
CULVERT REPLACEMENT

LOCATION: SKOOKUMCHUCK HATCHERY

SHEET 10 OF 14 DATE: 5/9/2014

ENG. PROJECT NO. TN:H41:14-1

NOTE:

HABITAT BOULDER PLACEMENT WILL BE STAKED IN FIELD BY HETA STAFF.

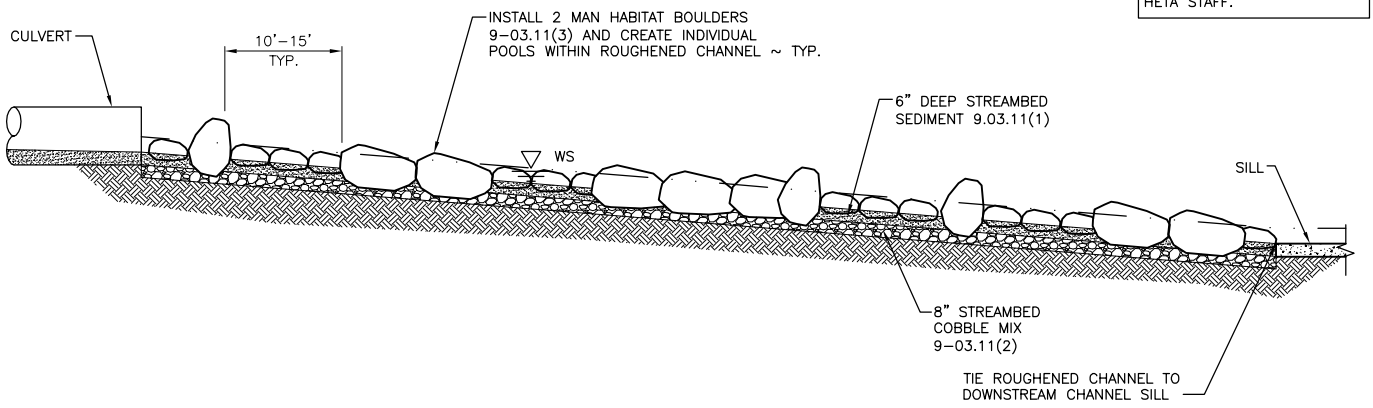

SECTION B 10|11

NOT TO SCALE

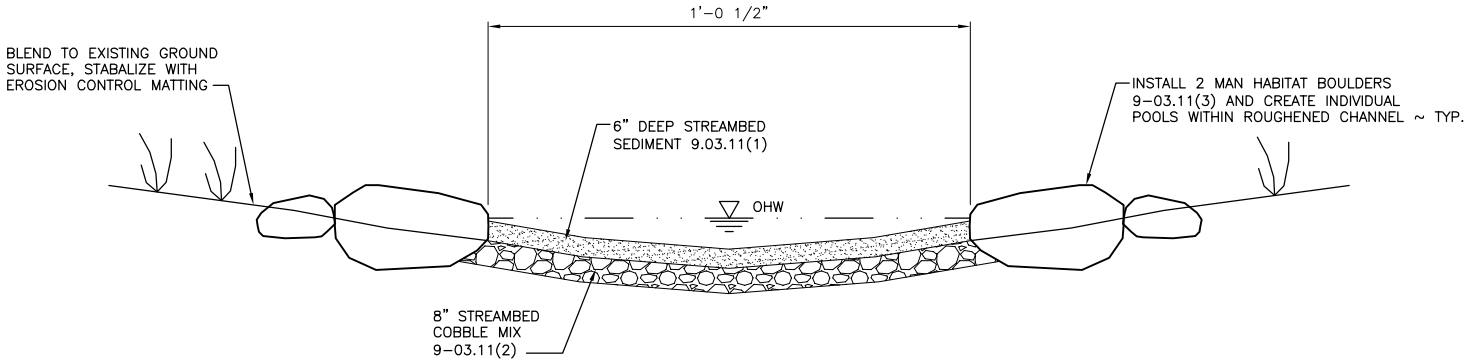

SECTION C 10|11

NOT TO SCALE

REFERENCE NUMBER:

APPLICANT NAME:
WASHINGTON DEPT. of FISH & WILDLIFE

PROPOSED PROJECT:
CULVERT REPLACEMENT

LOCATION: SKOOKUMCHUCK HATCHERY

SHEET 11 OF 14 DATE: 5/9/2014

ENG. PROJECT NO. TN:H41:14–1

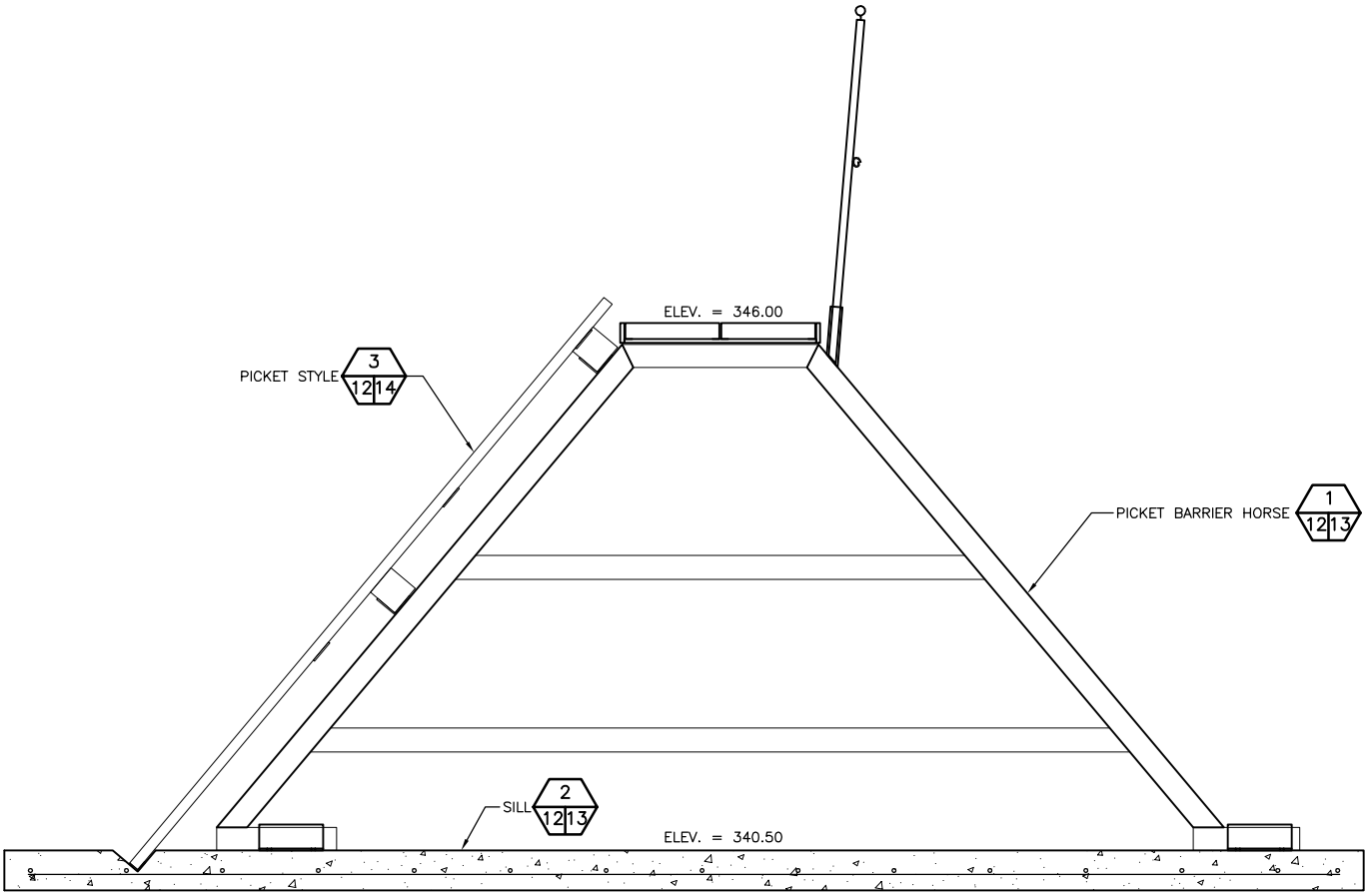

PICKET BARRIER

SCALE: 1/2" = 1'-0"

REFERENCE NUMBER:

APPLICANT NAME:
WASHINGTON DEPT. of FISH & WILDLIFE

PROPOSED PROJECT:
CULVERT REPLACEMENT

LOCATION: SKOOKUMCHUCK HATCHERY

SHEET 12 OF 14 DATE: 5/9/2014

ENG. PROJECT NO. TN:H41:14-1

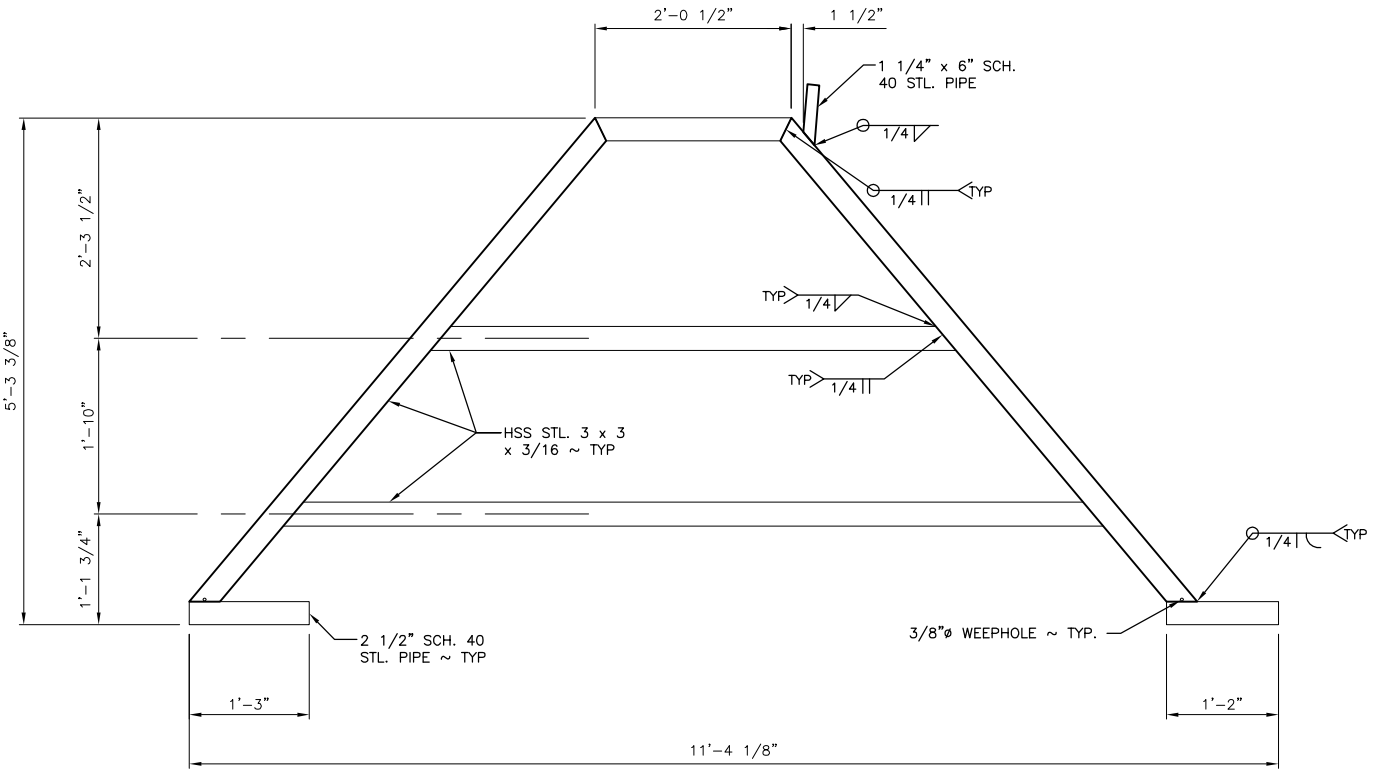

PICKET BARRIER HORSE

SCALE: 1/2" = 1'-0"

1 / 12|13

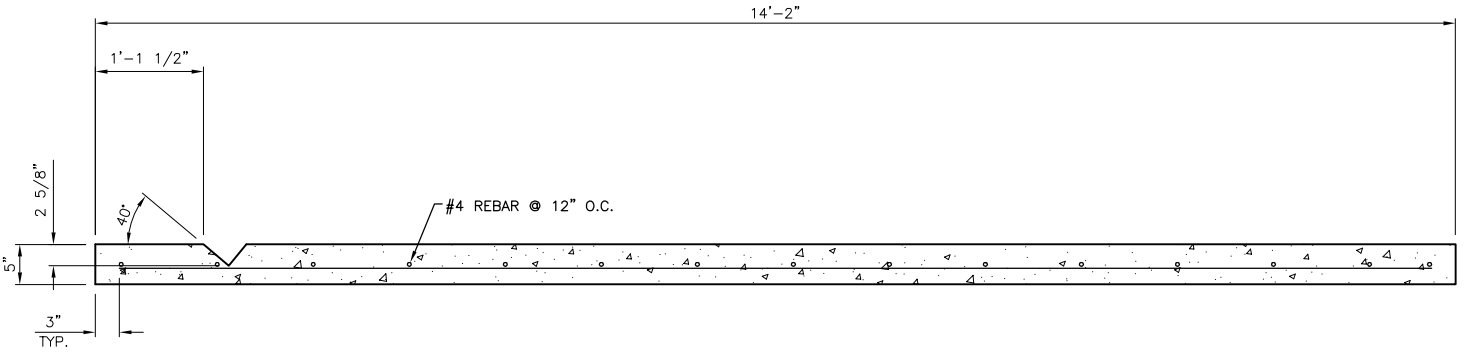

PICKET BARRIER SILL

SCALE: 1/2" = 1'-0"

2 / 12|13

REFERENCE NUMBER:

APPLICANT NAME:
WASHINGTON DEPT. of FISH & WILDLIFE

PROPOSED PROJECT:
CULVERT REPLACEMENT

LOCATION: SKOOKUMCHUCK HATCHERY

SHEET 13 OF 14 DATE: 5/9/2014

ENG. PROJECT NO. TN:H41:14-1

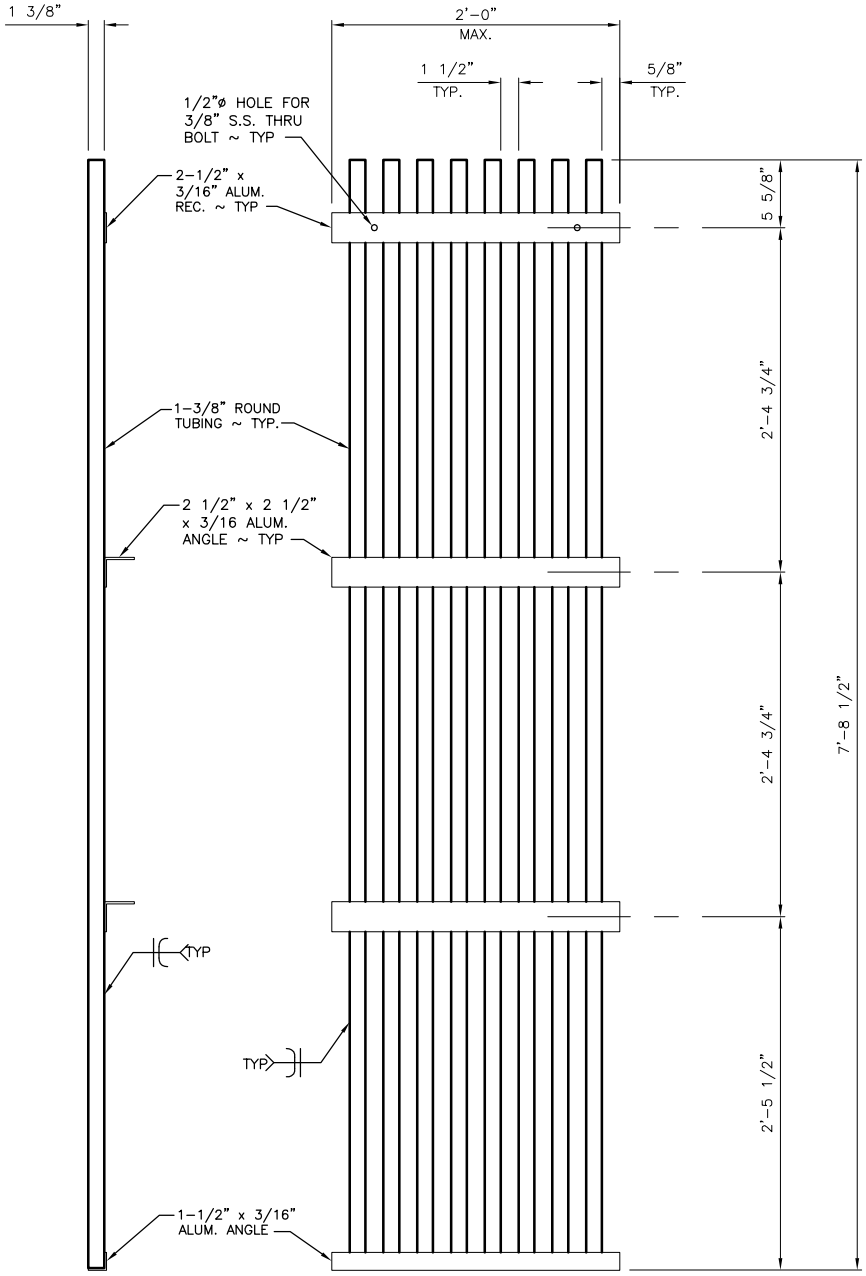

SIDE ELEVATION

ELEVATION

PICKET STYLE

SCALE: 3/4" = 1'-0"

3
12 14

NOTE:

1. CONTRACTOR SUBMIT SHOP DRAWINGS DETAILING ALL PICKET SECTIONS NEEDED TO PRODUCE A BARRIER CONTINUOUS ACROSS THE STREAM, FROM WEST ABUTMENT TO EAST ABUTMENT.
2. PAINT PICKETS FLAT BLACK.

REFERENCE NUMBER:

APPLICANT NAME:
WASHINGTON DEPT. of FISH & WILDLIFE

PROPOSED PROJECT:
CULVERT REPLACEMENT

LOCATION: SKOOKUMCHUCK HATCHERY

SHEET 14 OF 14 DATE: 5/9/2014

ENG. PROJECT NO. TN:H41:14-1