Woodworking Projects for Backyard Wildlife

Downy and Hairy Woodpecker Nest Box

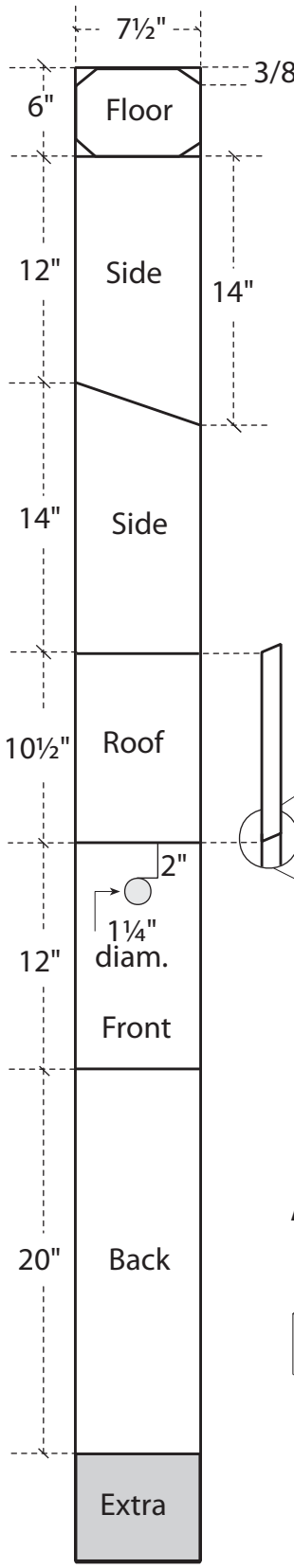

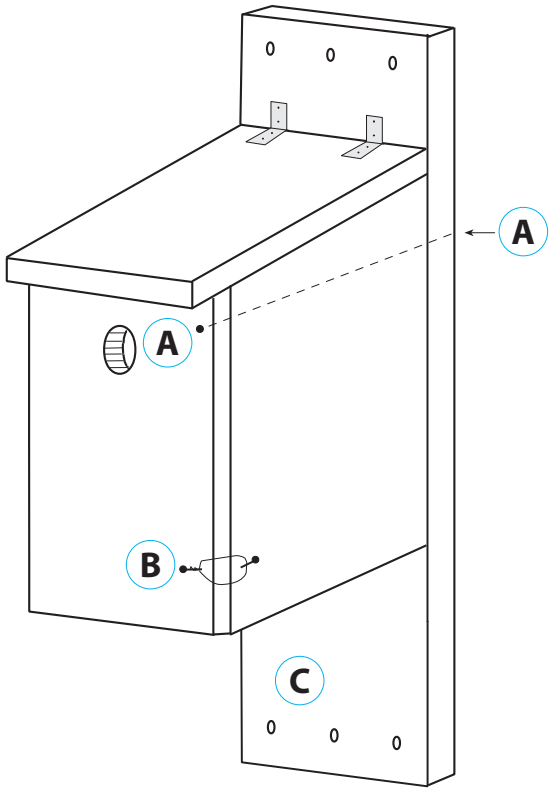

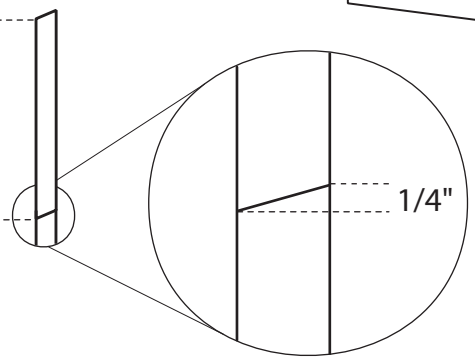

Materials

One 1x8" x 8' rough cedar board

Twenty 1-1/2" outdoor wood screws or # 7 galvanized nails

Wire to keep side door shut

A Pivot screws work as hinges. To allow the side to open easily, the pivot screw on the opposite side needs to be level with the one in front.

B Loop wire around nails

C Holes for attaching box to a tree or post with nails, lag bolts, or wire.

Mounting the Nest Box

Mount box 6 feet high or more and keep the flyway open in front of the box.

Tilt box forward about 15 degrees to make it easier for the babies to climb up to the entry hole.

Fill box to the top with wood shavings (animal bedding can be purchased at a pet store). Fine sawdust is not recommended because it remains damp and is difficult for birds to work with. Pack-in shavings to discourage starlings and sparrows from nesting in the box. Excavating a cavity is part of the bird's mating behavior.

Assembly Sequence

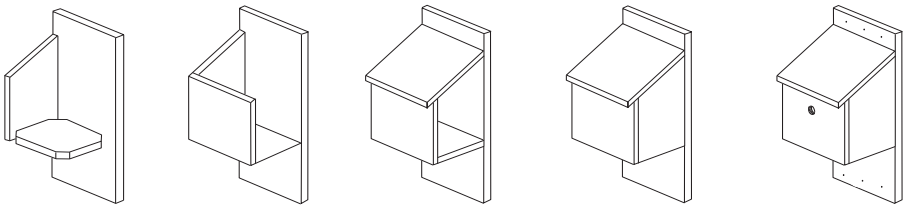

Washington Department of FISH and WILDLIFE