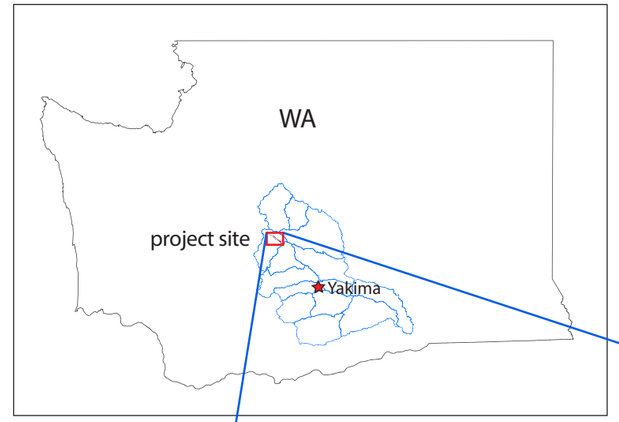

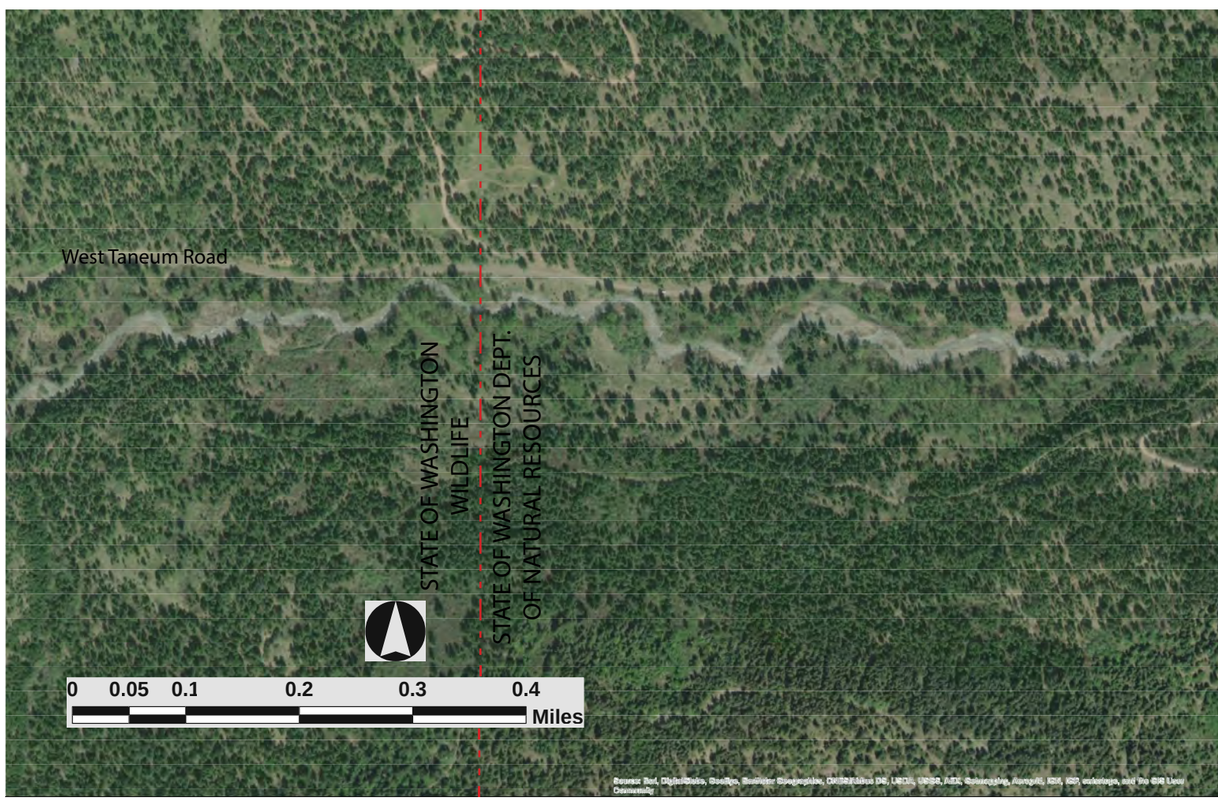

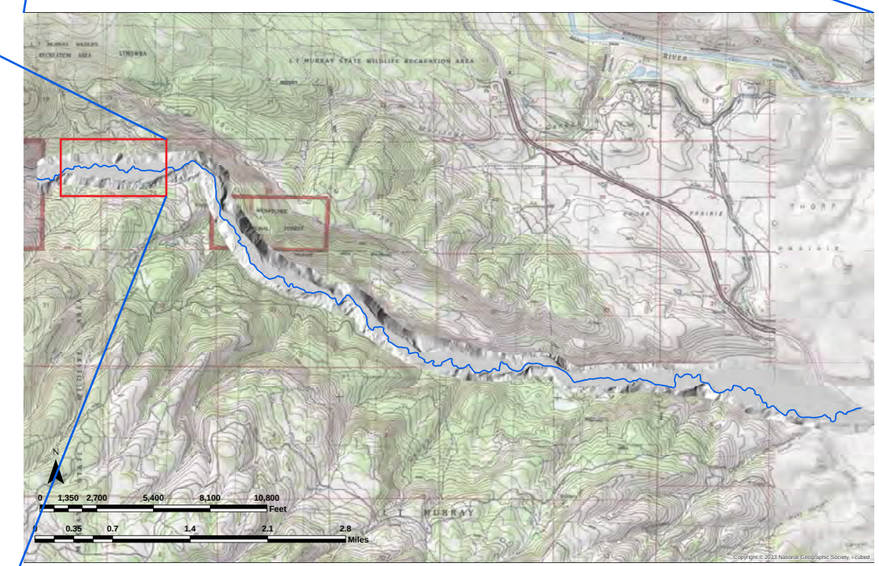

SHEET INDEX

SHEET 1	COVER SHEET
SHEET 2	ABBREVIATIONS, SYMBOLS, AND GENERAL NOTES
SHEET 3	PROJECT ELEMENT PLAN VIEW
SHEET 4	ACCESS, STAGING AREAS, & APE
SHEET 5	LOG JAM DESCRIPTIONS & EXAMPLE PHOTOS
SHEET 6	BANK-ANCHORED LOG JAM DETAILS
SHEET 7	BED-ANCHORED LOG JAM DETAILS
SHEET 8	HIP iii MEASURES, 1
SHEET 9	HIP iii MEASURES, 2

WPD, LLC
4301 B Garden Park Way
Yakima, WA 98908
(435)770-6414

COVER SHEET
90% DESIGN SET
TANEUM CREEK HABITAT PROJECT, CEDAR MEADOW
KITTITAS COUNTY, WASHINGTON

DESIGNED BY:	DRAWN BY:	DATE DRAWN:
HAS	HAS	3/4/2020

SCALE
as stated

MATERIAL QUANTITIES TABLE		
FEATURE	**MATERIAL**	**AMOUNT - UNITS**
EXCAVATION		
	RE-ACTIVATE CHANNEL/PLACE WOOD	< 50 CY
LARGE WOOD		
FLOODPLAIN	MINIMUM 30-40' LOGS WITHOUT ROOTWADS, 10"-18" dia.	40
IN-CHANNEL	MINIMUM 40' LOGS WITHOUT ROOTWADS, MINIMUM 18" dia.	40
IN-CHANNEL	MINIMUM 40' UNTRIMMED LOGS, WITH ROOTWADS, MINIMUM 15" dia.	70
IN-CHANNEL AND FLOODPLAIN	30' TREE-TOPS, BRANCHES, SLASH	100
DISTURBED AREAS		
	RIPARIAN SEED MIX	40 lbs. (20 lbs./acre)

Seed Mix List			
Type	Common Name	Scientific Name	Percent of Mix
Riparian Seed Mix; 20 lbs/acre	Idaho fescue	*Festuca idahonensis*	25%
	Blue wildrye	*Elymus glaucus*	25%
	Mountain brome	*Bromus marginatus*	15%
	Baltic rush	*Juncus balticus*	15%
	Thickspike wheatgrass	*Elymus lanceolatus*	10%
	Tufted hairgrass	*Deschampia cespitosa*	5%
	Spikerush	*Eleocharis palustris*	5%

GENERAL NOTES

1) DISCHARGE DATA, GEOMORPHIC ANALYSIS, AERIAL PHOTO INTERPRETATION, AND TOPOGRAPHIC DATA DERIVED FROM LiDAR (2009 and 2018) INCLUDING NUMEROUS CROSS-SECTIONS, AND 2D HYDRAULIC MODELING, ARE THE BASIS FOR THE DESIGN OF THIS PROJECT.

2) ALL TOPOGRAPHIC AND GIS DATA USED FOR DESIGN ARE AVAILABLE IN THE UNIVERSAL TRANSVERSE MERCATOR COORDINATE SYSTEM ZONE 10N, IN NAD83 DATUM FOR THE HORIZONTAL DIRECTION AND NAVD88 FOR THE VERTICAL DIRECTION.

3) IF THE DRAWINGS ARE NOT SUFFICIENTLY DETAILED TO ADDRESS THE WORK TO BE DONE, CONTACT THE SITE SUPERVISOR, AS DESIGNATED BY YAKAMA NATION.

4) CONTRACTOR SHALL CONTACT UNDERGROUND SERVICE ALERT (USA), AT 800-332-2344, AT LEAST TWO (2) WORKING DAYS PRIOR TO DIGGING AND REQUEST A FIELD LOCATION FOR ALL UNDERGROUND UTILITIES.

5) CONTRACTOR IS RESPONSIBLE FOR PROVIDING ALL NECESSARY JOB SITE SAFETY DEVICES AND PROCEDURES, AND FOR COMPLYING WITH ALL APPLICABLE LOCAL, STATE, AND FEDERAL REGULATIONS.

6) ALL INSTREAM WORK WILL BE DONE BY INSTRUCTION OF SITE SUPERVISOR, AS DESIGNATED BY YAKAMA NATION.

7) RE-VEGETATION OF DISTURBED SURFACES SHALL BE SEEDED AS DIRECTED BY THE STATE OF WASHINGTON GUIDELINES, AND YAKAMA NATION BIOLOGISTS.

WPD, LLC
4301B Garden Park Way
Yakima, WA 98908
(435)770-6414

ABBREVIATIONS AND NOTES

TANEUM CREEK HABITAT PROJECT, CEDAR MEADOW

KITTITAS COUNTY, WASHINGTON

DESIGNED BY: HAS
DRAWN BY: HAS
DATE DRAWN: 3/4/2020

SCALE
as stated

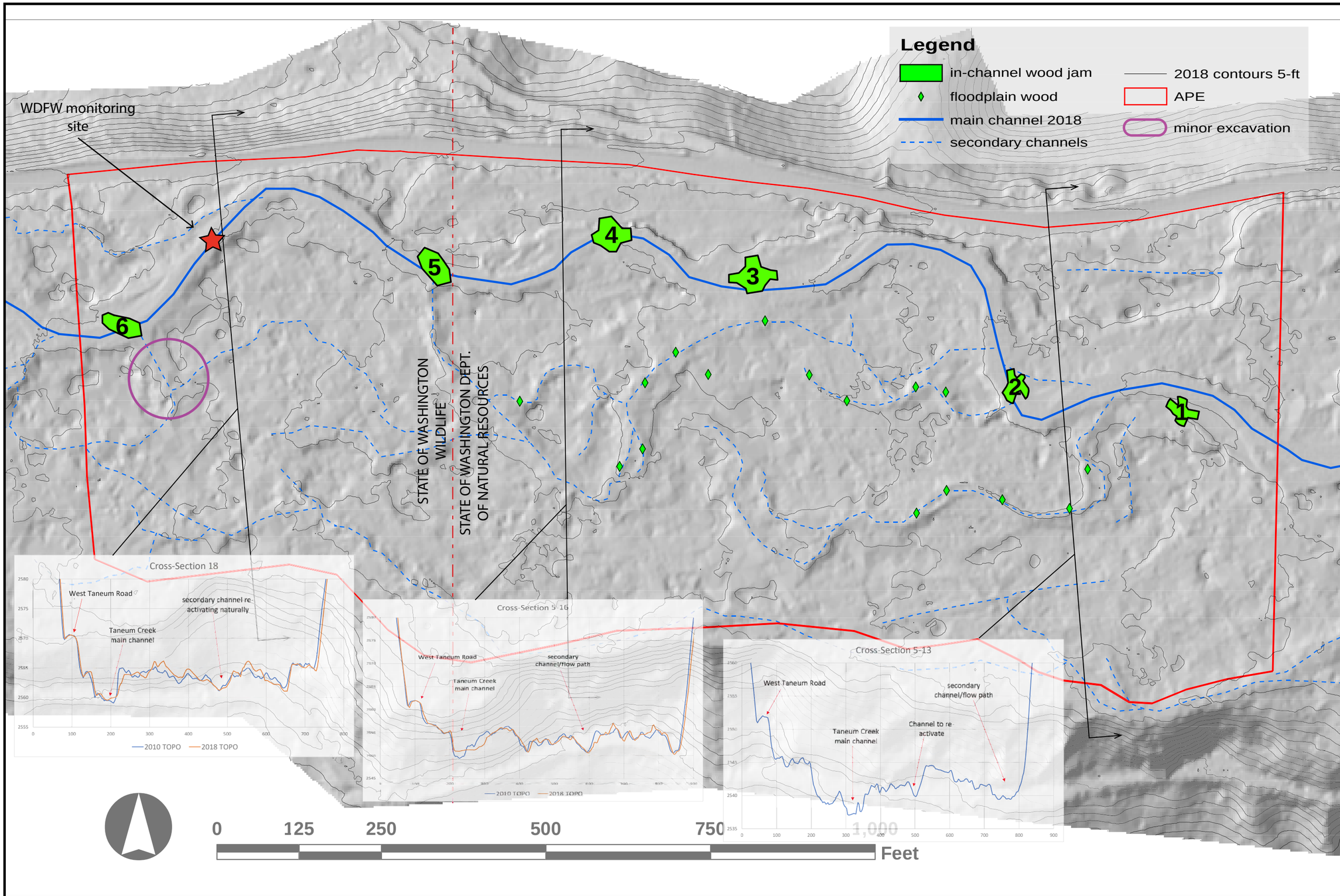

WPD, LLC

4301 B Garden Park Way
Yakima, WA 98908
(435)770-6414

PROJECT ELEMENTS

TANEUM CREEK HABITAT PROJECT, CEDAR MEADOW

KITTITAS COUNTY, WASHINGTON

DESIGNED BY:	DRAWN BY:	DATE DRAWN:
HAS	HAS	3/4/2020

SCALE
as stated

SHEET
3
OF 9

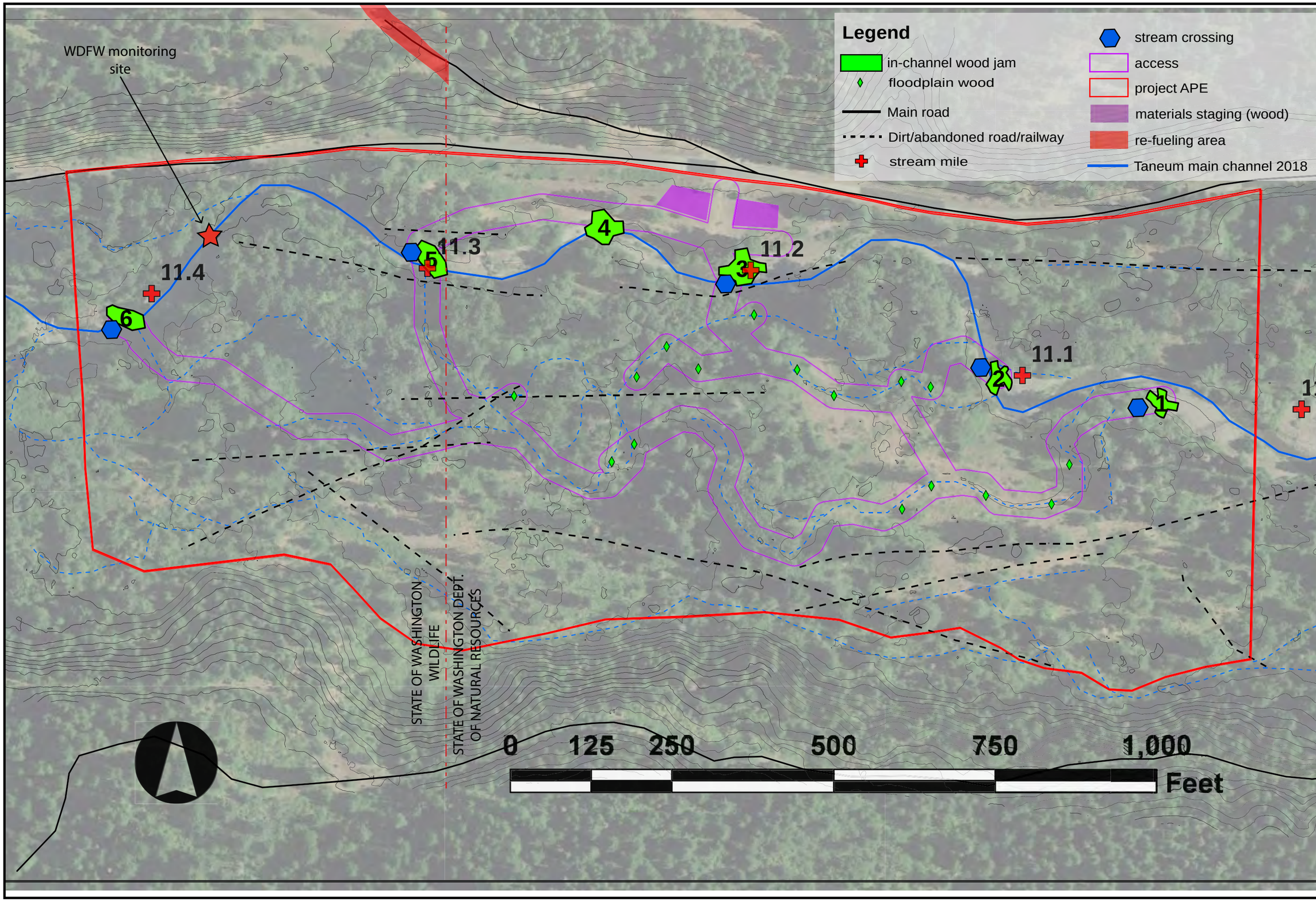

WPD, LLC

4301 B Garden Park Way
Yakima, WA 98908
(435)770-6414

PROJECT ELEMENTS OVERVIEW

TANEUM CREEK HABITAT PROJECT, CEDAR MEADOW

KITTITAS COUNTY, WASHINGTON

DESIGNED BY:	DRAWN BY:	DATE DRAWN:
HAS	HAS	3/4/2020

SCALE
as stated

SHEET
4
OF 9

logjam ID	# of Logs	Example Photo	Description/Function
1	10-15	5, 6	River Left bed-anchored structure on gravel bar to encourage bar expansion & increase depth heterogeneity
2	10-15	5, 6	River Left bank-anchored structure also keyed to live trees, for gravel bar expansion & secondary channel development
3	15-20	5, 6	River Left bank-anchored structure for roughness, cover, pool scour, gravel bar expansion, and side channel activation
4	10-15	2, 3, 4	River Left bank-anchored structure also keyed to trees, for roughness, cover, pool scour, and side channel activation
5	25-30	1, 5, 6	River Left bed-anchored structure also keyed to live trees and shrubs, to re-direct flow and activate right side channel
6	25-30	1, 5, 6	River Left bank-anchored structure, near gravel bar apex, to re-direct flow and activate right side channel

* Shown examples may be different in scale and orientation, as well as degree of anchoring.

1

Partially self-ballasted full span log jam on gently sloping banks for backwater-ing and secondary channel activation; it can be anchored into banks and bed

2

Bank-anchored log jam, also keyed into existing trees/shrub, on a moderately steep bank for flow deflection and pool scour, before being backfilled complete-ly; it can extend along bank

3

Bank-anchored log jam, also keyed into existing shrubs, on a moderately steep bank for flow deflection and pool scour; it can extend along bank

4

Partially self-ballasted log jam keyed into existing trees on steep cutbank for flow deflection and pool scour; it can be anchored into banks and bed

5

2 versions of bed-anchored log jams on gently sloping banks

6

Bed-anchored log jam at the apex of a gravel bar, with existing shrubs; position, size, and orientation can be adjusted based on local conditions and intended function

NOTES:

1) PHOTOS ARE SHOWN AS EXAMPLE OF LOG JAMS WITH SIMILAR FUNCTION. EXACT CONFIGURATION AND SIZE MAY BE DIFFERENT DUE TO LOCAL TOPOGRAPHY, VEGETATION, AND AVAILABLE WOOD. FINAL LOG JAM CONFIGURATIONS MAY COMBINE ELMENTS OF MANY EXAMPLES SHOWN.

2) PLACE ALL WOODY MATERIAL WITHOUT DISTURBING EXISTING WOOD OR DAMAGING LIVE VEGETATION WHEREVER POSSIBLE.

3) PLACE WOOD TO FURTHER STABILIZE EXISTING WOOD, BASED ON INSTRUCTION FROM SITE SUPERVISOR. ADJUSTMENTS WILL BE MADE FOR A CUSTOM FIT, BASED ON CHANNEL GEOMETRY AND WOOD SIZE AND SHAPE.

4) MINIMIZE EARTH-MOVING IN PLACEMENT OF WOOD. USE EXISTING CHANNELGEOMETRY, EXISTING WOOD, LIVE VEGETATION AS ANCHORS.

SHEET 5 OF 9

SCALE as stated

DESIGNED BY: HAS

DRAWN BY: HAS

DATE DRAWN: 3/4/2020

LOG JAM DESCRIPTIONS & EXAMPLE PHOTOS

TANEUM CREEK HABITAT PROJECT, CEDAR MEADOW

KITTITAS COUNTY, WASHINGTON

WPD, LLC

4301B Garden Park Way
Yakima, WA 98908
(435)770-6414

1 Excavate bank, ensure it is counter-sunk, place footer logs.

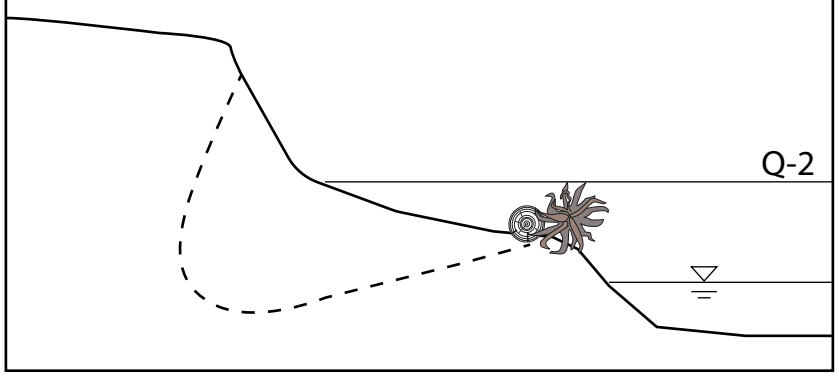

2 Place second row of logs perpindicular to footers.

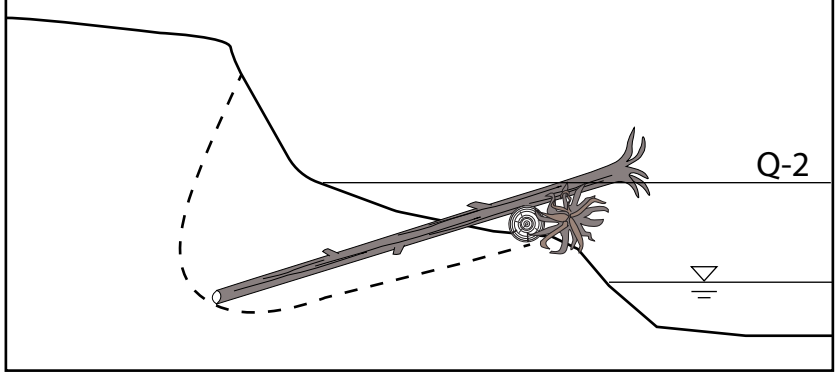

3 Place third row of logs; criss-crossing the second row is optional.

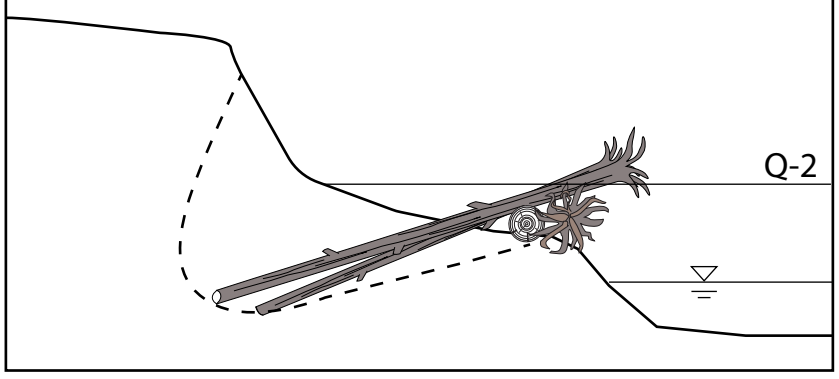

4 Place fourth row of logs, parallel to footers, and other logs (can be piles for additional security).

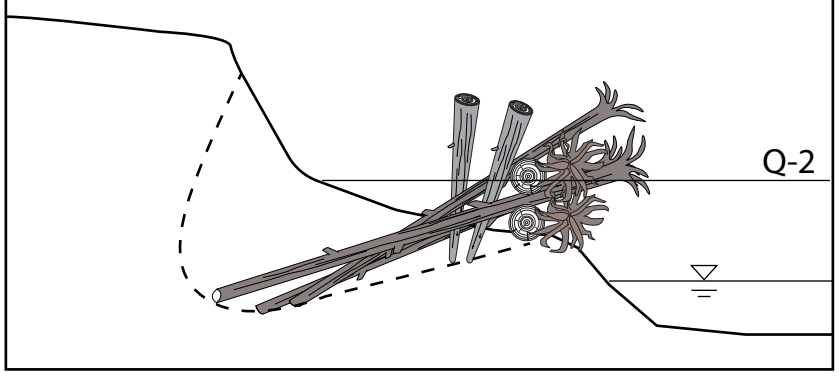

5 Backfill and place topper logs. Topper logs can be self-balasted or locked in place with live trees/shrubs.

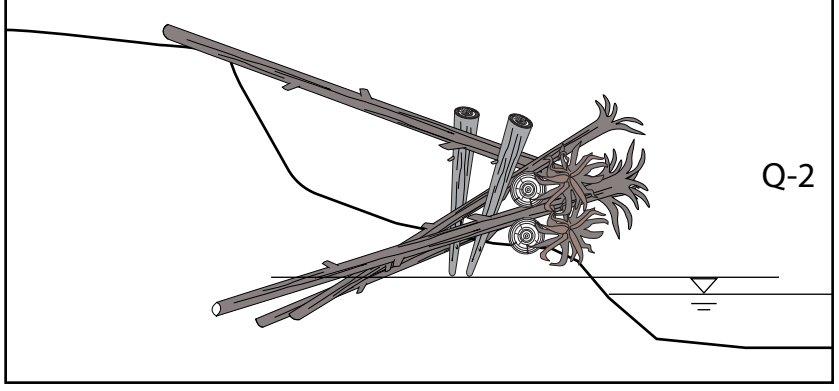

NOTE:
THESE GENERAL INSTRUCTIONS ARE APPLICABLE TO LOG JAMS 1, 2, and 4. EXACT CONFIGURATION, SIZE, POSITION, AND ORIENTATION WILL BE FIELD FITTED TO EXISTING SITE CONDITIONS.

SHEET 6 OF 9	SCALE as stated	DESIGNED BY: HAS DRAWN BY: HAS DATE DRAWN: 3/4/2020	**BANK-ANCHORED LOG JAM CONSTRUCTION SEQUENCE & EXAMPLE PHOTOS** TANEUM CREEK HABITAT PROJECT, CEDAR MEADOW KITTITAS COUNTY, WASHINGTON	WPD, LLC 4301B Garden Park Way Yakima, WA 98908 (435)770-6414

PLAN VIEW

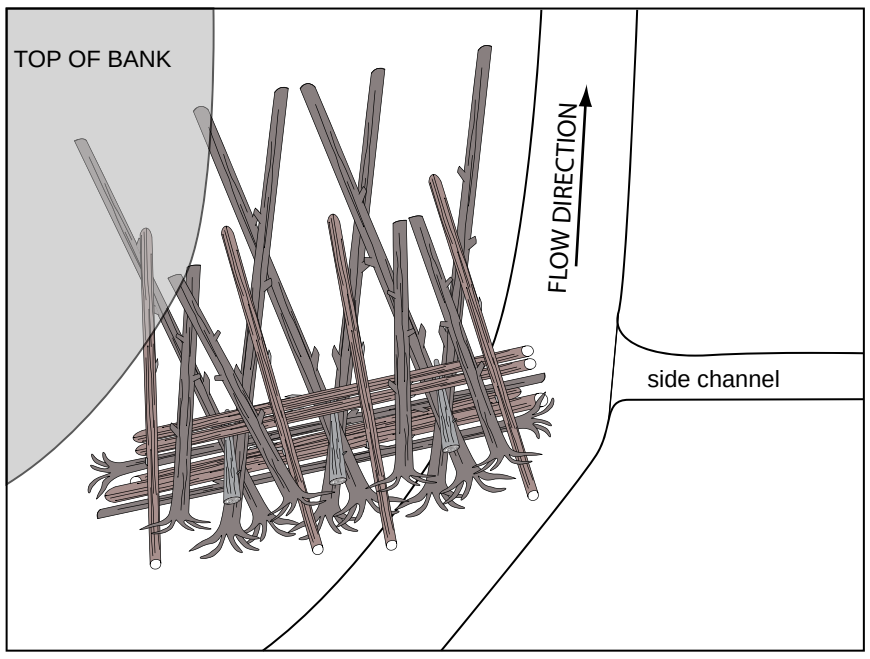

CROSS-SECTION VIEW

LONGITUDINAL VIEW

1

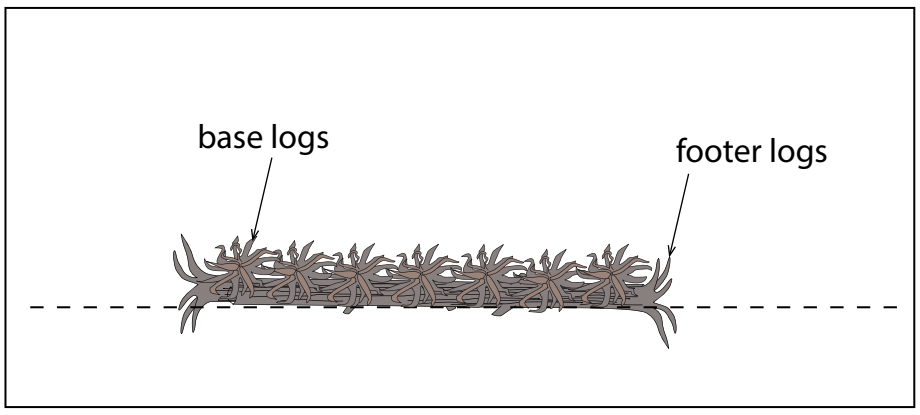

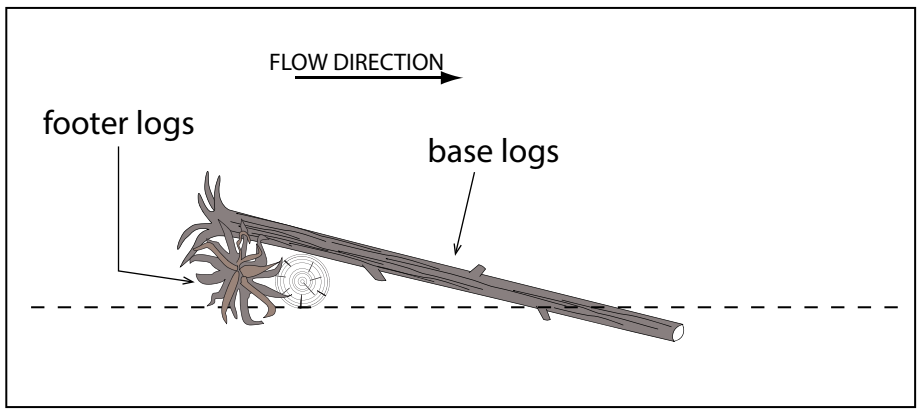

2

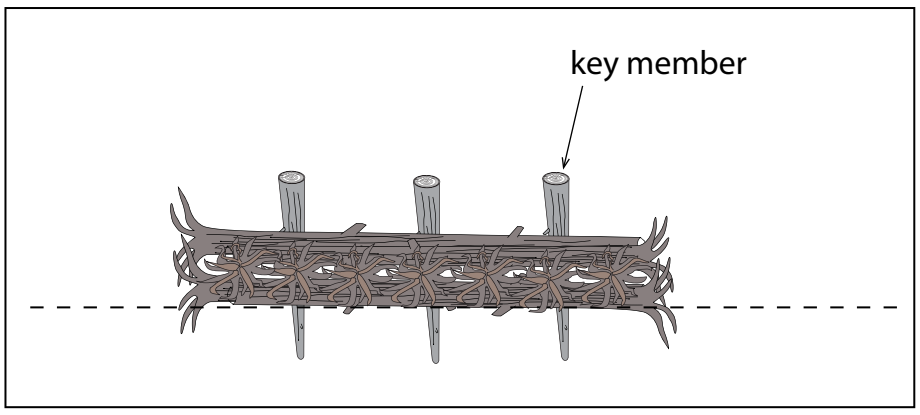

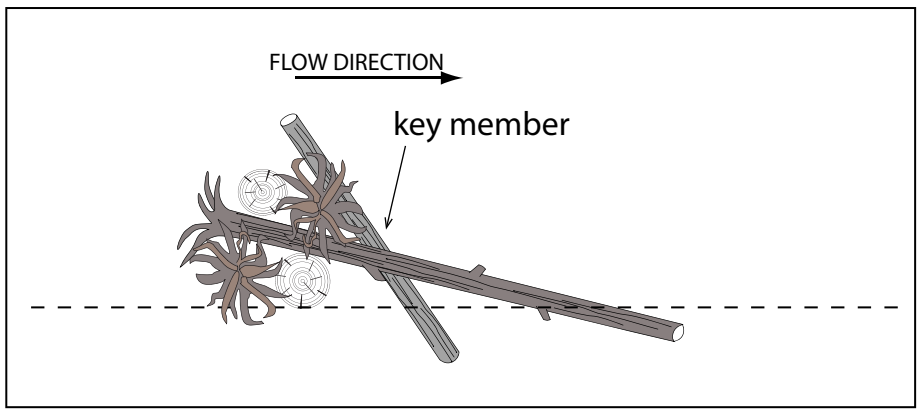

3

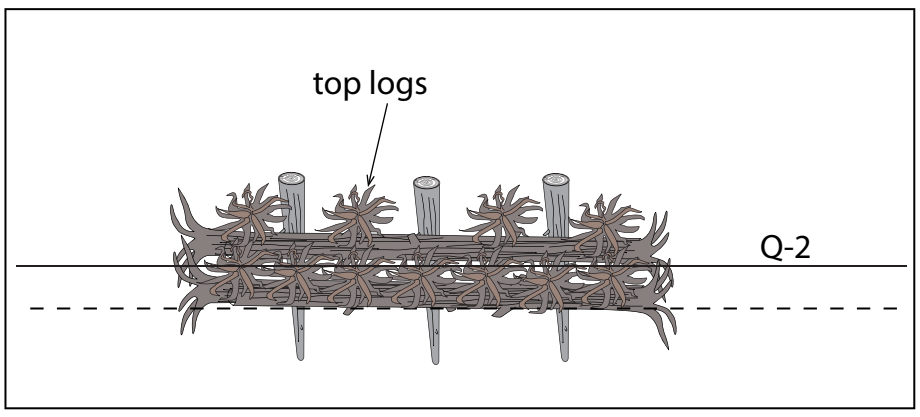

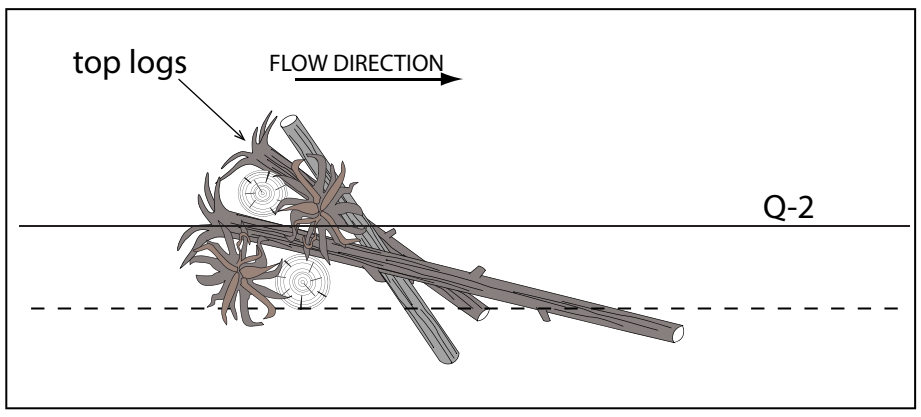

NOTE:
THESE GENERAL INSTRUCTIONS ARE APPLICABLE TO LOG JAMS 3, 5, and 6. EXACT CONFIGURATION, SIZE, POSITION, AND ORIENTATION WILL BE FIELD FITTED TO EXISTING SITE CONDITIONS.

GENERAL INSTRUCTIONS:

1) PLACE ALL WOODY MATERIAL WITHOUT DISTURBING EXISTING WOOD OR DAMAGING LIVE VEGETATION.
2) PLACE WOOD TO FURTHER STABILIZE EXISTING WOOD, BASED ON INSTRUCTION FROM SITE SUPERVISOR. ADJUSTMENTS WILL BE MADE FOR A CUSTOM FIT, BASED ON CHANNEL GEOMETRY AND WOOD SIZE AND SHAPE.
3) MINIMIZE EARTH-MOVING IN PLACEMENT OF WOOD. USE EXISTING CHANNELGEOMETRY, EXISTING WOOD, LIVE VEGETATION AS ANCHORS.
4) WOOD JAMS WILL BE FIELD FITTED TO TIE INTO TOPOGRAPHY AND EXISTING WOOD AND VEGETATION. SKETCHES ONLY SHOW MINIMUM NUMBER OF WOOD PIECES. WOOD JAMS WILL BE CONSTRUCTED WITH MORE PIECES AND BE MORE COMPLEX ON SITE.

SHEET 7 OF 9	SCALE as stated	DESIGNED BY: HAS DRAWN BY: HAS DATE DRAWN: 3/4/2020	**BED-ANCHORED LOG JAM DETAILS AND CONSTRUCTION SEQUENCE** TANEUM CREEK HABITAT PROJECT, CEDAR MEADOW KITTITAS COUNTY, WASHINGTON	WPD, LLC 4301B Garden Park Way Yakima, WA 98908 (435)770-6414

HIP 3 GENERAL AQUATIC CONSERVATION MEASURES APPLICABLE TO ALL ACTIONS

THE ACTIVITIES COVERED UNDER THE HIPIII ARE INTENDED TO PROTECT AND RESTORE FISH AND WILDLIFE HABITAT WITH LONG-TERM BENEFITS TO ESA-LISTED SPECIES. TO MINIMIZE THESE SHORT-TERM ADVERSE EFFECTS AND MAKE THEM PREDICTABLE FOR THE PURPOSES OF PROGRAMMATIC ANALYSIS, BPA WILL INCLUDE IN ALL PROJECTS IMPLEMENTED UNDER THIS HIP III PROPOSED ACTION THE FOLLOWING GENERAL CONSERVATION MEASURES (DEVELOPED IN COORDINATION WITH USFWS AND NMFS).

PROJECT DESIGN AND SITE PREPARATION.

1) STATE AND FEDERAL PERMITS. ALL APPLICABLE REGULATORY PERMITS AND OFFICIAL PROJECT AUTHORIZATIONS WILL BE OBTAINED BEFORE PROJECT IMPLEMENTATION. THESE PERMITS AND AUTHORIZATIONS INCLUDE, BUT ARE NOT LIMITED TO, NATIONAL ENVIRONMENTAL POLICY ACT, NATIONAL HISTORIC PRESERVATION ACT, AND THE APPROPRIATE STATE AGENCY REMOVAL AND FILL PERMIT, USACE CLEAN WATER ACT (CWA) 404 PERMITS, AND CWA SECTION 401 WATER QUALITY CERTIFICATIONS.

2) TIMING OF IN-WATER WORK. APPROPRIATE STATE (OREGON DEPARTMENT OF FISH AND WILDLIFE (ODFW), WASHINGTON DEPARTMENT OF FISH AND WILDLIFE (WDFW), IDAHO DEPARTMENT OF FISH AND GAME (IDFG), AND MONTANA FISH WILDLIFE AND PARKS (MFWP)) GUIDELINES FOR TIMING OF IN-WATER WORK WINDOWS (IWW) WILL BE FOLLOWED.

A) BULL TROUT - WHILE UTILIZING THE APPROPRIATE STATE DESIGNATED IN-WATER WORK PERIOD WILL LESSEN THE RISK TO BULL TROUT, THIS ALONE MAY NOT BE SUFFICIENT TO ADEQUATELY PROTECT LOCAL BULL TROUT POPULATIONS. THIS IS ESPECIALLY TRUE IF WORK IS OCCURRING IN SPAWNING AND REARING AREAS BECAUSE EGGS, ALEVIN, AND FRY ARE IN THE SUBSTRATE OR CLOSELY ASSOCIATED HABITATS NEARLY YEAR ROUND. SOME AREAS MAY NOT HAVE DESIGNATED IN-WATER WORK WINDOWS FOR BULL TROUT OR IF THEY DO, THEY MAY CONFLICT WITH WORK WINDOWS FOR SALMON AND STEELHEAD. IF THIS IS THE CASE, OR IF PROPOSED WORK IS TO OCCUR WITHIN BULL TROUT SPAWNING AND REARING HABITATS, PROJECT PROPONENTS WILL CONTACT THE APPROPRIATE USFWS FIELD OFFICE TO INSURE THAT ALL REASONABLE IMPLEMENTATION MEASURES ARE CONSIDERED AND AN APPROPRIATE IN-WATER WORK WINDOW IS BEING USED TO MINIMIZE PROJECT EFFECTS.

B) LAMPREY - THE PROJECT SPONSOR AND/OR THEIR CONTRACTORS WILL AVOID WORKING IN STREAM OR RIVER CHANNELS THAT CONTAIN PACIFIC LAMPREY FROM MARCH 1 TO JULY 1 IN LOW TO MID ELEVATION REACHES (<5,000 FEET). IN HIGH ELEVATION REACHES (>5,000 FEET), THE PROJECT SPONSOR WILL AVOID WORKING IN STREAM OR RIVER CHANNELS FROM MARCH 1 TO AUGUST 1. IF EITHER TIMEFRAME IS INCOMPATIBLE WITH OTHER OBJECTIVES, THE AREA WILL BE SURVEYED FOR NESTS AND LAMPREY PRESENCE, AND AVOIDED IF POSSIBLE. IF LAMPREYS ARE KNOWN TO EXIST, THE PROJECT SPONSOR WILL UTILIZE DEWATERING AND SALVAGE PROCEDURES OUTLINED IN US FISH AND WILDLIFE SERVICE BEST MANAGEMENT PRACTICES TO MINIMIZE ADVERSE EFFECTS TO PACIFIC LAMPREY (2010).

C) EXCEPTIONS TO ODFW, WDFW, MFWP, OR IDFG IN-WATER WORK WINDOWS WILL BE REQUESTED THROUGH THE VARIANCE PROCESS (PAGE 2).

3) CONTAMINANTS. THE PROJECT SPONSOR WILL COMPLETE A SITE ASSESSMENT WITH THE FOLLOWING ELEMENTS TO IDENTIFY THE TYPE, QUANTITY, AND EXTENT OF ANY POTENTIAL CONTAMINATION FOR ANY ACTION THAT INVOLVES EXCAVATION OF MORE THAN 20 CUBIC YARDS OF MATERIAL:

A) A REVIEW OF AVAILABLE RECORDS, SUCH AS FORMER SITE USE, BUILDING PLANS, AND RECORDS OF ANY PRIOR CONTAMINATION EVENTS;

B) A SITE VISIT TO INSPECT THE AREAS USED FOR VARIOUS INDUSTRIAL PROCESSES AND THE CONDITION OF THE PROPERTY;

C) INTERVIEWS WITH KNOWLEDGEABLE PEOPLE, SUCH AS SITE OWNERS, OPERATORS, AND OCCUPANTS, NEIGHBORS, OR LOCAL GOVERNMENT OFFICIALS; AND

D) A SUMMARY, STORED WITH THE PROJECT FILE THAT INCLUDES AN ASSESSMENT OF THE LIKELIHOOD THAT CONTAMINANTS ARE PRESENT AT THE SITE, BASED ON ITEMS 4(A) THROUGH 4(C).

4) SITE LAYOUT AND FLAGGING. PRIOR TO CONSTRUCTION. THE ACTION AREA WILL BE CLEARLY FLAGGED TO IDENTIFY THE FOLLOWING:

A) SENSITIVE RESOURCE AREAS, SUCH AS AREAS BELOW ORDINARY HIGH WATER, SPAWNING AREAS, SPRINGS, AND WETLANDS;

B) EQUIPMENT ENTRY AND EXIT POINTS;

C) ROAD AND STREAM CROSSING ALIGNMENTS;

D) STAGING, STORAGE, AND STOCKPILE AREAS; AND

E) NO-SPRAY AREAS AND BUFFERS.

5) TEMPORARY ACCESS ROADS AND PATHS.

A) EXISTING ACCESS ROADS AND PATHS WILL BE PREFERENTIALLY USED WHENEVER REASONABLE, AND THE NUMBER AND LENGTH OF TEMPORARY ACCESS ROADS AND PATHS THROUGH RIPARIAN AREAS AND FLOODPLAINS WILL BE MINIMIZED TO LESSEN SOIL DISTURBANCE AND COMPACTION, AND IMPACTS TO VEGETATION.

B) TEMPORARY ACCESS ROADS AND PATHS WILL NOT BE BUILT ON SLOPES WHERE GRADE, SOIL, OR OTHER FEATURES SUGGEST A LIKELIHOOD OF EXCESSIVE EROSION OR FAILURE. IF SLOPES ARE STEEPER THAN 30%, THEN THE ROAD WILL BE DESIGNED BY A CIVIL ENGINEER WITH EXPERIENCE IN STEEP ROAD DESIGN.

C) THE REMOVAL OF RIPARIAN VEGETATION DURING CONSTRUCTION OF TEMPORARY ACCESS ROADS WILL BE MINIMIZED. WHEN TEMPORARY VEGETATION REMOVAL IS REQUIRED, VEGETATION WILL BE CUT AT GROUND LEVEL (NOT GRUBBED).

D) AT PROJECT COMPLETION, ALL TEMPORARY ACCESS ROADS AND PATHS WILL BE OBLITERATED, AND THE SOIL WILL BE STABILIZED AND REVEGETATED. ROAD AND PATH OBLITERATION REFERS TO THE MOST COMPREHENSIVE DEGREE OF DECOMMISSIONING AND INVOLVES DECOMPACTING THE SURFACE AND DITCH, PULLING THE FILL MATERIAL ONTO THE RUNNING SURFACE, AND RESHAPING TO MATCH THE ORIGINAL CONTOUR.

E) TEMPORARY ROADS AND PATHS IN WET AREAS OR AREAS PRONE TO FLOODING WILL BE OBLITERATED BY THE END OF THE IN-WATER WORK WINDOW.

6) TEMPORARY STREAM CROSSINGS.

A) EXISTING STREAM CROSSINGS WILL BE PREFERENTIALLY USED WHENEVER REASONABLE, AND THE NUMBER OF TEMPORARY STREAM CROSSINGS WILL BE MINIMIZED.

B) TEMPORARY BRIDGES AND CULVERTS WILL BE INSTALLED TO ALLOW FOR EQUIPMENT AND VEHICLE CROSSING OVER PERENNIAL STREAMS DURING CONSTRUCTION. TREATED WOOD SHALL NOT BE USED ON TEMPORARY BRIDGE CROSSINGS OR IN LOCATIONS IN CONTACT WITH OR OVER WATER.

C) EQUIPMENT AND VEHICLES WILL CROSS THE STREAM IN THE WET ONLY WHERE:

I. THE STREAMBED IS BEDROCK; OR

II. MATS OR OFF-SITE LOGS ARE PLACED IN THE STREAM AND USED AS A CROSSING.

D) VEHICLES AND MACHINERY WILL CROSS STREAMS AT RIGHT ANGLES TO THE MAIN CHANNEL WHEREVER POSSIBLE.

E) THE LOCATION OF THE TEMPORARY CROSSING WILL AVOID AREAS THAT MAY INCREASE THE RISK OF CHANNEL RE-ROUTING OR AVULSION.

F) POTENTIAL SPAWNING HABITAT (I.E., POOL TAILOUTS) AND POOLS WILL BE AVOIDED TO THE MAXIMUM EXTENT POSSIBLE.

G) NO STREAM CROSSINGS WILL OCCUR AT ACTIVE SPAWNING SITES, WHEN HOLDING ADULT LISTED FISH ARE PRESENT, OR WHEN EGGS OR ALEVINS ARE IN THE GRAVEL. THE APPROPRIATE STATE FISH AND WILDLIFE AGENCY WILL BE CONTACTED FOR SPECIFIC TIMING INFORMATION.

H) AFTER PROJECT COMPLETION, TEMPORARY STREAM CROSSINGS WILL BE OBLITERATED AND THE STREAM CHANNEL AND BANKS RESTORED.

7) STAGING, STORAGE, AND STOCKPILE AREAS.

A) STAGING AREAS (USED FOR CONSTRUCTION EQUIPMENT STORAGE, VEHICLE STORAGE, FUELING, SERVICING, AND HAZARDOUS MATERIAL STORAGE) WILL BE 150 FEET OR MORE FROM ANY NATURAL WATER BODY OR WETLAND, OR ON AN ADJACENT, ESTABLISHED ROAD AREA IN A LOCATION AND MANNER THAT WILL PRECLUDE EROSION INTO OR CONTAMINATION OF THE STREAM OR FLOODPLAIN.

B) NATURAL MATERIALS USED FOR IMPLEMENTATION OF AQUATIC RESTORATION, SUCH AS LARGE WOOD, GRAVEL, AND BOULDERS, MAY BE STAGED WITHIN THE 100-YEAR FLOODPLAIN.

C) ANY LARGE WOOD, TOPSOIL, AND NATIVE CHANNEL MATERIAL DISPLACED BY CONSTRUCTION WILL BE STOCKPILED FOR USE DURING SITE RESTORATION AT A SPECIFICALLY IDENTIFIED AND FLAGGED AREA.

D) ANY MATERIAL NOT USED IN RESTORATION, AND NOT NATIVE TO THE FLOODPLAIN, WILL BE REMOVED TO A LOCATION OUTSIDE OF THE 100-YEAR FLOODPLAIN FOR DISPOSAL.

8) EQUIPMENT. MECHANIZED EQUIPMENT AND VEHICLES WILL BE SELECTED, OPERATED, AND MAINTAINED IN A MANNER THAT MINIMIZES ADVERSE EFFECTS ON THE ENVIRONMENT (E.G., MINIMALLY-SIZED, LOW PRESSURE TIRES; MINIMAL HARD-TURN PATHS FOR TRACKED VEHICLES; TEMPORARY MATS OR PLATES WITHIN WET AREAS OR ON SENSITIVE SOILS). ALL VEHICLES AND OTHER MECHANIZED EQUIPMENT WILL BE:

A) STORED, FUELED, AND MAINTAINED IN A VEHICLE STAGING AREA PLACED 150 FEET OR MORE FROM ANY NATURAL WATER BODY OR WETLAND OR ON AN ADJACENT, ESTABLISHED ROAD AREA;

B) REFUELED IN A VEHICLE STAGING AREA PLACED 150 FEET OR MORE FROM A NATURAL WATERBODY OR WETLAND, OR IN AN ISOLATED HARD ZONE, SUCH AS A PAVED PARKING LOT OR ADJACENT, ESTABLISHED ROAD (THIS MEASURE APPLIES ONLY TO GAS-POWERED EQUIPMENT WITH TANKS LARGER THAN 5 GALLONS);

C) BIODEGRADABLE LUBRICANTS AND FLUIDS SHALL BE USED ON EQUIPMENT OPERATING IN AND ADJACENT TO THE STREAM CHANNEL AND LIVE WATER.

D) INSPECTED DAILY FOR FLUID LEAKS BEFORE LEAVING THE VEHICLE STAGING AREA FOR OPERATION WITHIN 150 FEET OF ANY NATURAL WATER BODY OR WETLAND; AND

E) THOROUGHLY CLEANED BEFORE OPERATION BELOW ORDINARY HIGH WATER, AND AS OFTEN AS NECESSARY DURING OPERATION, TO REMAIN GREASE FREE.

9) EROSION CONTROL. EROSION CONTROL MEASURES WILL BE PREPARED AND CARRIED OUT, COMMENSURATE IN SCOPE WITH THE ACTION, THAT MAY INCLUDE THE FOLLOWING:

A) TEMPORARY EROSION CONTROLS.

I. TEMPORARY EROSION CONTROLS WILL BE IN PLACE BEFORE ANY SIGNIFICANT ALTERATION OF THE ACTION SITE AND APPROPRIATELY INSTALLED DOWNSLOPE OF PROJECT ACTIVITY WITHIN THE RIPARIAN BUFFER AREA UNTIL SITE REHABILITATION IS COMPLETE.

II. IF THERE IS A POTENTIAL FOR ERODED SEDIMENT TO ENTER THE STREAM, SEDIMENT BARRIERS WILL BE INSTALLED AND MAINTAINED FOR THE DURATION OF PROJECT IMPLEMENTATION.

III. TEMPORARY EROSION CONTROL MEASURES MAY INCLUDE FIBER WATTLES, SILT FENCES, JUTE MATTING, WOOD FIBER MULCH AND SOIL BINDER, OR GEOTEXTILES AND GEOSYNTHETIC FABRIC.

IV. SOIL STABILIZATION UTILIZING WOOD FIBER MULCH AND TACKIFIER (HYDRO-APPLIED) MAY BE USED TO REDUCE EROSION OF BARE SOIL IF THE MATERIALS ARE NOXIOUS WEED FREE AND NONTOXIC TO AQUATIC AND TERRESTRIAL ANIMALS, SOIL MICROORGANISMS, AND VEGETATION.

V. SEDIMENT WILL BE REMOVED FROM EROSION CONTROLS ONCE IT HAS REACHED 1/3 OF THE EXPOSED HEIGHT OF THE CONTROL.

VI. ONCE THE SITE IS STABILIZED AFTER CONSTRUCTION, TEMPORARY EROSION CONTROL MEASURES WILL BE REMOVED.

B) EMERGENCY EROSION CONTROLS. THE FOLLOWING MATERIALS FOR EMERGENCY EROSION CONTROL WILL BE AVAILABLE AT THE WORK SITE:

I. A SUPPLY OF SEDIMENT CONTROL MATERIALS; AND

II. AN OIL-ABSORBING FLOATING BOOM WHENEVER SURFACE WATER IS PRESENT.

10) DUST ABATEMENT. THE PROJECT SPONSOR WILL DETERMINE THE APPROPRIATE DUST CONTROL MEASURES BY CONSIDERING SOIL TYPE, EQUIPMENT USAGE, PREVAILING WIND DIRECTION, AND THE EFFECTS CAUSED BY OTHER EROSION AND SEDIMENT CONTROL MEASURES. IN ADDITION, THE FOLLOWING CRITERIA WILL BE FOLLOWED:

A) WORK WILL BE SEQUENCED AND SCHEDULED TO REDUCE EXPOSED BARE SOIL SUBJECT TO WIND EROSION.

B) DUST-ABATEMENT ADDITIVES AND STABILIZATION CHEMICALS (TYPICALLY MAGNESIUM CHLORIDE, CALCIUM CHLORIDE SALTS, OR LIGNINSULFONATE) WILL NOT BE APPLIED WITHIN 25 FEET OF WATER OR A STREAM CHANNEL AND WILL BE APPLIED SO AS TO MINIMIZE THE LIKELIHOOD THAT THEY WILL ENTER STREAMS. APPLICATIONS OF LIGNINSULFONATE WILL BE LIMITED TO A MAXIMUM RATE OF 0.5 GALLONS PER SQUARE YARD OF ROAD SURFACE, ASSUMING A 50:50 (LIGNINSULFONATE TO WATER) SOLUTION.

C) APPLICATION OF DUST ABATEMENT CHEMICALS WILL BE AVOIDED DURING OR JUST BEFORE WET WEATHER, AND AT STREAM CROSSINGS OR OTHER AREAS THAT COULD RESULT IN UNFILTERED DELIVERY OF THE DUST ABATEMENT MATERIALS TO A WATERBODY (TYPICALLY THESE WOULD BE AREAS WITHIN 25 FEET OF A WATERBODY OR STREAM CHANNEL; DISTANCES MAY BE GREATER WHERE VEGETATION IS SPARSE OR SLOPES ARE STEEP).

D) SPILL CONTAINMENT EQUIPMENT WILL BE AVAILABLE DURING APPLICATION OF DUST ABATEMENT CHEMICALS.

E) PETROLEUM-BASED PRODUCTS WILL NOT BE USED FOR DUST ABATEMENT.

11) SPILL PREVENTION, CONTROL, AND COUNTER MEASURES. THE USE OF MECHANIZED MACHINERY INCREASES THE RISK FOR ACCIDENTAL SPILLS OF FUEL, LUBRICANTS, HYDRAULIC FLUID, OR OTHER CONTAMINANTS INTO THE RIPARIAN ZONE OR DIRECTLY INTO THE WATER. ADDITIONALLY, UNCURED CONCRETE AND FORM MATERIALS ADJACENT TO THE ACTIVE STREAM CHANNEL MAY RESULT IN ACCIDENTAL DISCHARGE INTO THE WATER. THESE CONTAMINANTS CAN DEGRADE HABITAT, AND INJURE OR KILL AQUATIC FOOD ORGANISMS AND ESA-LISTED SPECIES. THE PROJECT SPONSOR WILL ADHERE TO THE FOLLOWING MEASURES:

A) A DESCRIPTION OF HAZARDOUS MATERIALS THAT WILL BE USED, INCLUDING INVENTORY, STORAGE, AND HANDLING PROCEDURES WILL BE AVAILABLE ON-SITE.

B) WRITTEN PROCEDURES FOR NOTIFYING ENVIRONMENTAL RESPONSE AGENCIES WILL BE POSTED AT THE WORK SITE.

C) SPILL CONTAINMENT KITS (INCLUDING INSTRUCTIONS FOR CLEANUP AND DISPOSAL) ADEQUATE FOR THE TYPES AND QUANTITY OF HAZARDOUS MATERIALS USED AT THE SITE WILL BE AVAILABLE AT THE WORK SITE.

D) WORKERS WILL BE TRAINED IN SPILL CONTAINMENT PROCEDURES AND WILL BE INFORMED OF THE LOCATION OF SPILL CONTAINMENT KITS.

E) ANY WASTE LIQUIDS GENERATED AT THE STAGING AREAS WILL BE TEMPORARILY STORED UNDER AN IMPERVIOUS COVER, SUCH AS A TARPAULIN, UNTIL THEY CAN BE PROPERLY TRANSPORTED TO AND DISPOSED OF AT A FACILITY THAT IS APPROVED FOR RECEIPT OF HAZARDOUS MATERIALS.

12) INVASIVE SPECIES CONTROL. THE FOLLOWING MEASURES WILL BE FOLLOWED TO AVOID INTRODUCTION OF INVASIVE PLANTS AND NOXIOUS WEEDS INTO PROJECT AREAS:

A) PRIOR TO ENTERING THE SITE, ALL VEHICLES AND EQUIPMENT WILL BE POWER WASHED, ALLOWED TO FULLY DRY, AND INSPECTED TO MAKE SURE NO PLANTS, SOIL, OR OTHER ORGANIC MATERIAL ADHERES TO THE SURFACE.

B) WATERCRAFT, WADERS, BOOTS, AND ANY OTHER GEAR TO BE USED IN OR NEAR WATER WILL BE INSPECTED FOR AQUATIC INVASIVE SPECIES.

C) WADING BOOTS WITH FELT SOLES ARE NOT TO BE USED DUE TO THEIR PROPENSITY FOR AIDING IN THE TRANSFER OF INVASIVE SPECIES.

WPD, LLC
4301B Garden Park Way
Yakima, WA 98908
(435)770-6414

HIP III GENERAL CONSERVATION & IMPLEMENTATION MEASURES - 1
TANEUM CREEK HABITAT PROJECT, CEDAR MEADOW
KITTITAS COUNTY, WASHINGTON

DESIGNED BY:	DRAWN BY:	DATE DRAWN:
HAS	HAS	3/4/2020

SCALE
as stated

WORK AREA ISOLATION & FISH SALVAGE.

ANY WORK AREA WITHIN THE WETTED CHANNEL WILL BE ISOLATED FROM THE ACTIVE STREAM WHENEVER ESA-LISTED FISH ARE REASONABLY CERTAIN TO BE PRESENT, OR IF THE WORK AREA IS LESS THAN 300-FEET UPSTREAM FROM KNOWN SPAWNING HABITATS. WHEN WORK AREA ISOLATION IS REQUIRED, DESIGN PLANS WILL INCLUDE ALL ISOLATION ELEMENTS, FISH RELEASE AREAS, AND, WHEN A PUMP IS USED TO DEWATER THE ISOLATION AREA AND FISH ARE PRESENT, A FISH SCREEN THAT MEETS NMFS'S FISH SCREEN CRITERIA (NMFS 2011, OR MOST CURRENT). WORK AREA ISOLATION AND FISH CAPTURE ACTIVITIES WILL OCCUR DURING PERIODS OF THE COOLEST AIR AND WATER TEMPERATURES POSSIBLE, NORMALLY EARLY IN THE MORNING VERSUS LATE IN THE DAY, AND DURING CONDITIONS APPROPRIATE TO MINIMIZE STRESS AND DEATH OF SPECIES PRESENT.

- NATIONAL MARINE FISHERIES SERVICE. 2011. ANADROMOUS SALMONID PASSAGE FACILITY DESIGN. NORTHWEST REGION. AVAILABLE ONLINE AT:
HTTP://WWW.NWR.NOAA.GOV/SALMON-HYDROPOWER/FERC/UPLOAD/FISH-PASSAGE-DESIGN.PDF
- U.S. FISH AND WILDLIFE SERVICE. 2010. BEST MANAGEMENT PRACTICES TO MINIMIZE ADVERSE EFFECTS TO PACIFIC LAMPREY.
HTTP://WWW.FWS.GOV/PACIFIC/FISHERIES/SPHABCON/LAMPREY/PDF/BEST%20MANAGEMENT%20PRACTICES%20FOR%20PACIFIC%20LAMPREY%20APRIL%202010%20VERSION.PDF

FOR SALVAGE OPERATIONS IN KNOWN BULL TROUT SPAWNING AND REARING HABITAT, ELECTROFISHING SHALL ONLY OCCUR FROM MAY 1 TO JULY 31. NO ELECTROFISHING WILL OCCUR IN ANY BULL TROUT OCCUPIED HABITAT AFTER AUGUST 15. BULL TROUT ARE VERY TEMPERATURE SENSITIVE AND GENERALLY SHOULD NOT BE ELECTROSHOCKED OR OTHERWISE HANDLED WHEN TEMPERATURES EXCEED 15 DEGREES CELSIUS. SALVAGE ACTIVITIES SHOULD TAKE PLACE DURING PERIODS OF THE COOLEST AIR AND WATER TEMPERATURES POSSIBLE, NORMALLY EARLY IN THE MORNING VERSUS LATE IN THE DAY, AND DURING CONDITIONS APPROPRIATE TO MINIMIZE STRESS TO FISH SPECIES PRESENT.

SALVAGE OPERATIONS WILL FOLLOW THE ORDERING, METHODOLOGIES, AND CONSERVATION MEASURES SPECIFIED BELOW IN STEPS 1 THROUGH 6. STEPS 1 AND 2 WILL BE IMPLEMENTED FOR ALL PROJECTS WHERE WORK AREA ISOLATION IS NECESSARY ACCORDING TO CONDITIONS ABOVE. ELECTROFISHING (STEP 3) CAN BE IMPLEMENTED TO ENSURE ALL FISH HAVE BEEN REMOVED FOLLOWING STEPS 1 AND 2, OR WHEN OTHER MEANS OF FISH CAPTURE MAY NOT BE FEASIBLE OR EFFECTIVE. DEWATERING AND REWATERING (STEPS 4 AND 5) WILL BE IMPLEMENTED UNLESS WETTED IN-STREAM WORK IS DEEMED TO BE MINIMALLY HARMFUL TO FISH, AND IS BENEFICIAL TO OTHER AQUATIC SPECIES. DEWATERING WILL NOT BE CONDUCTED IN AREAS KNOWN TO BE OCCUPIED BY LAMPREY, UNLESS LAMPREYS ARE SALVAGED USING GUIDANCE SET FORTH IN US FISH AND WILDLIFE SERVICE (2010)3.

1) ISOLATE.

A) BLOCK NETS WILL BE INSTALLED AT UPSTREAM AND DOWNSTREAM LOCATIONS AND MAINTAINED IN A SECURED POSITION TO EXCLUDE FISH FROM ENTERING THE PROJECT AREA.

B) BLOCK NETS WILL BE SECURED TO THE STREAM CHANNEL BED AND BANKS UNTIL FISH CAPTURE AND TRANSPORT ACTIVITIES ARE COMPLETE. BLOCK NETS MAY BE LEFT IN PLACE FOR THE DURATION OF THE PROJECT TO EXCLUDE FISH.

C) IF BLOCK NETS REMAIN IN PLACE MORE THAN ONE DAY, THE NETS WILL BE MONITORED AT LEAST DAILY TO ENSURE THEY ARE SECURED TO THE BANKS AND FREE OF ORGANIC ACCUMULATION. IF THE PROJECT IS WITHIN BULL TROUT SPAWNING AND REARING HABITAT, THE BLOCK NETS MUST BE CHECKED EVERY FOUR HOURS FOR FISH IMPINGEMENT ON THE NET. LESS FREQUENT INTERVALS MUST BE APPROVED THROUGH A VARIANCE REQUEST.

D) NETS WILL BE MONITORED HOURLY ANYTIME THERE IS INSTREAM DISTURBANCE.

2) SALVAGE. AS DESCRIBED BELOW, FISH TRAPPED WITHIN THE ISOLATED WORK AREA WILL BE CAPTURED TO MINIMIZE THE RISK OF INJURY, THEN RELEASED AT A SAFE SITE:

A) REMOVE AS MANY FISH AS POSSIBLE PRIOR TO DEWATERING.

B) DURING DEWATERING, ANY REMAINING FISH WILL BE COLLECTED BY HAND OR DIP NETS.

C) SEINES WITH A MESH SIZE TO ENSURE CAPTURE OF THE RESIDING ESA-LISTED FISH WILL BE USED.

D) MINNOW TRAPS WILL BE LEFT IN PLACE OVERNIGHT AND USED IN CONJUNCTION WITH SEINING.

E) IF BUCKETS ARE USED TO TRANSPORT FISH:

I. THE TIME FISH ARE IN A TRANSPORT BUCKET WILL BE LIMITED, AND WILL BE RELEASED AS QUICKLY AS POSSIBLE;

II. THE NUMBER OF FISH WITHIN A BUCKET WILL BE LIMITED BASED ON SIZE, AND FISH WILL BE OF RELATIVELY COMPARABLE SIZE TO MINIMIZE PREDATION;

III. AERATORS FOR BUCKETS WILL BE USED OR THE BUCKET WATER WILL BE FREQUENTLY CHANGED WITH COLD CLEAR WATER AT 15 MINUTE OR MORE FREQUENT INTERVALS.

IV. BUCKETS WILL BE KEPT IN SHADED AREAS OR WILL BE COVERED BY A CANOPY IN EXPOSED AREAS.

V. DEAD FISH WILL NOT BE STORED IN TRANSPORT BUCKETS, BUT WILL BE LEFT ON THE STREAM BANK TO AVOID MORTALITY COUNTING ERRORS.

F) AS RAPIDLY AS POSSIBLE (ESPECIALLY FOR TEMPERATURE-SENSITIVE BULL TROUT), FISH WILL BE RELEASED IN AN AREA THAT PROVIDES ADEQUATE COVER AND FLOW REFUGE. UPSTREAM RELEASE IS GENERALLY PREFERRED, BUT FISH RELEASED DOWNSTREAM WILL BE SUFFICIENTLY OUTSIDE OF THE INFLUENCE OF CONSTRUCTION.

G) SALVAGE WILL BE SUPERVISED BY A QUALIFIED FISHERIES BIOLOGIST EXPERIENCED WITH WORK AREA ISOLATION AND COMPETENT TO ENSURE THE SAFE HANDLING OF ALL FISH.

3) ELECTROFISHING. ELECTROFISHING WILL BE USED ONLY AFTER OTHER SALVAGE METHODS HAVE BEEN EMPLOYED OR WHEN OTHER MEANS OF FISH CAPTURE ARE DETERMINED TO NOT BE FEASIBLE OR EFFECTIVE. IF ELECTROFISHING WILL BE USED TO CAPTURE FISH FOR SALVAGE, THE SALVAGE OPERATION WILL BE LED BY AN EXPERIENCED FISHERIES BIOLOGIST AND THE FOLLOWING GUIDELINES WILL BE FOLLOWED:

A) THE NMFS'S ELECTROFISHING GUIDELINES (NMFS 2000).

B) ONLY DIRECT CURRENT (DC) OR PULSED DIRECT CURRENT (PDC) WILL BE USED AND CONDUCTIVITY MUST BE TESTED.

I. IF CONDUCTIVITY IS LESS THAN 100 MS, VOLTAGE RANGES FROM 900 TO 1100 WILL BE USED.

II. FOR CONDUCTIVITY RANGES BETWEEN 100 TO 300 MS, VOLTAGE RANGES WILL BE 500 TO 800.

III. FOR CONDUCTIVITY GREATER THAN 300 MS, VOLTAGE WILL BE LESS THAN 400.

C) ELECTROFISHING WILL BEGIN WITH A MINIMUM PULSE WIDTH AND RECOMMENDED VOLTAGE AND THEN GRADUALLY INCREASE TO THE POINT WHERE FISH ARE IMMOBILIZED.

D) THE ANODE WILL NOT INTENTIONALLY CONTACT FISH.

E) ELECTROFISHING SHALL NOT BE CONDUCTED WHEN THE WATER CONDITIONS ARE TURBID AND VISIBILITY IS POOR. THIS CONDITION MAY BE EXPERIENCED WHEN THE SAMPLER CANNOT SEE THE STREAM BOTTOM IN ONE FOOT OF WATER.

F) IF MORTALITY OR OBVIOUS INJURY (DEFINED AS DARK BANDS ON THE BODY, SPINAL DEFORMATIONS, DE-SCALING OF 25% OR MORE OF BODY, AND TORPIDITY OR INABILITY TO MAINTAIN UPRIGHT ATTITUDE AFTER SUFFICIENT RECOVERY TIME) OCCURS DURING ELECTROFISHING, OPERATIONS WILL BE IMMEDIATELY DISCONTINUED, MACHINE SETTINGS, WATER TEMPERATURE AND CONDUCTIVITY CHECKED, AND PROCEDURES ADJUSTED OR ELECTROFISHING POSTPONED TO REDUCE MORTALITY.

4) DEWATER. DEWATERING, WHEN NECESSARY, WILL BE CONDUCTED OVER A SUFFICIENT PERIOD OF TIME TO ALLOW SPECIES TO NATURALLY MIGRATE OUT OF THE WORK AREA AND WILL BE LIMITED TO THE SHORTEST LINEAR EXTENT PRACTICABLE.

A) DIVERSION AROUND THE CONSTRUCTION SITE MAY BE ACCOMPLISHED WITH A COFFER DAM AND A BY-PASS CULVERT OR PIPE, OR A LINED, NON-ERODIBLE DIVERSION DITCH. WHERE GRAVITY FEED IS NOT POSSIBLE, A PUMP MAY BE USED, BUT MUST BE OPERATED IN SUCH A WAY AS TO AVOID REPETITIVE DEWATERING AND REWATERING OF THE SITE. IMPOUNDMENT BEHIND THE COFFERDAM MUST OCCUR SLOWLY THROUGH THE TRANSITION, WHILE CONSTANT FLOW IS DELIVERED TO THE DOWNSTREAM REACHES.

B) ALL PUMPS WILL HAVE FISH SCREENS TO AVOID JUVENILE FISH IMPINGEMENT OR ENTRAINMENT, AND WILL BE OPERATED IN ACCORDANCE WITH NMFS'S CURRENT FISH SCREEN CRITERIA (NMFS 20114, OR MOST RECENT VERSION). IF THE PUMPING RATE EXCEEDS 3 CUBIC FEET SECOND (CFS), A NMFS HYDRO FISH PASSAGE REVIEW WILL BE NECESSARY.

C) DISSIPATION OF FLOW ENERGY AT THE BYPASS OUTFLOW WILL BE PROVIDED TO PREVENT DAMAGE TO RIPARIAN VEGETATION OR STREAM CHANNEL.

D) SAFE REENTRY OF FISH INTO THE STREAM CHANNEL WILL BE PROVIDED, PREFERABLY INTO POOL HABITAT WITH COVER, IF THE DIVERSION ALLOWS FOR DOWNSTREAM FISH PASSAGE.

E) SEEPAGE WATER WILL BE PUMPED TO A TEMPORARY STORAGE AND TREATMENT SITE OR INTO UPLAND AREAS TO ALLOW WATER TO PERCOLATE THROUGH SOIL OR TO FILTER THROUGH VEGETATION PRIOR TO REENTERING THE STREAM CHANNEL.

4 NATIONAL MARINE FISHERIES SERVICE. 2011. ANADROMOUS SALMONID PASSAGE FACILITY DESIGN. NORTHWEST REGION. AVAILABLE ONLINE AT:
HTTP://WWW.NWR.NOAA.GOV/SALMON-HYDROPOWER/FERC/UPLOAD/FISH-PASSAGE-DESIGN.PDF

5) SALVAGE NOTICE. MONITORING AND RECORDING OF FISH PRESENCE, HANDLING, AND MORTALITY MUST OCCUR DURING THE DURATION OF THE ISOLATION, SALVAGE, ELECTROFISHING, DEWATERING, AND REWATERING OPERATIONS. ONCE OPERATIONS ARE COMPLETED, A SALVAGE REPORT WILL DOCUMENT PROCEDURES USED, ANY FISH INJURIES OR DEATHS (INCLUDING NUMBERS OF FISH AFFECTED), AND CAUSES OF ANY DEATHS.

CONSTRUCTION AND POST-CONSTRUCTION CONSERVATION MEASURES.

1) FISH PASSAGE. FISH PASSAGE WILL BE PROVIDED FOR ANY ADULT OR JUVENILE FISH LIKELY TO BE PRESENT IN THE ACTION AREA DURING CONSTRUCTION, UNLESS PASSAGE DID NOT EXIST BEFORE CONSTRUCTION OR THE STREAM IS NATURALLY IMPASSABLE AT THE TIME OF CONSTRUCTION. IF THE PROVISION OF TEMPORARY FISH PASSAGE DURING CONSTRUCTION WILL INCREASE NEGATIVE EFFECTS ON AQUATIC SPECIES OF INTEREST OR THEIR HABITAT, A VARIANCE CAN BE REQUESTED FROM THE NMFS BRANCH CHIEF AND THE FWS FIELD OFFICE SUPERVISOR. PERTINENT INFORMATION, SUCH AS THE SPECIES AFFECTED, LENGTH OF STREAM REACH AFFECTED, PROPOSED TIME FOR THE PASSAGE BARRIER, AND ALTERNATIVESCONSIDERED, WILL BE INCLUDED IN THE VARIANCE REQUEST.

2) CONSTRUCTION AND DISCHARGE WATER.

A) SURFACE WATER MAY BE DIVERTED TO MEET CONSTRUCTION NEEDS, BUT ONLY IF DEVELOPED SOURCES ARE UNAVAILABLE OR INADEQUATE.

B) DIVERSIONS WILL NOT EXCEED 10% OF THE AVAILABLE FLOW.

C) ALL CONSTRUCTION DISCHARGE WATER WILL BE COLLECTED AND TREATED USING THE BEST AVAILABLE TECHNOLOGY APPLICABLE TO SITE CONDITIONS.

D) TREATMENTS TO REMOVE DEBRIS, NUTRIENTS, SEDIMENT, PETROLEUM HYDROCARBONS, METALS AND OTHER POLLUTANTS LIKELY TO BE PRESENT WILL BE PROVIDED.

WPD, LLC
4301B Garden Park Way
Yakima, WA 98908
(435)770-6414

HIP III GENERAL CONSERVATION & IMPLEMENTATION MEASURES - 2
TANEUM CREEK HABITAT PROJECT, CEDAR MEADOW
KITTITAS COUNTY, WASHINGTON

DESIGNED BY:	DRAWN BY:	DATE DRAWN:
HAS	HAS	3/4/2020

SCALE
as stated