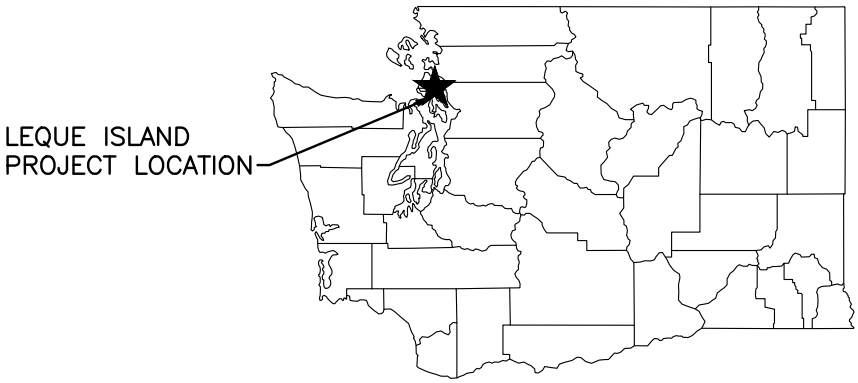

STATE MAP
NOT TO SCALE

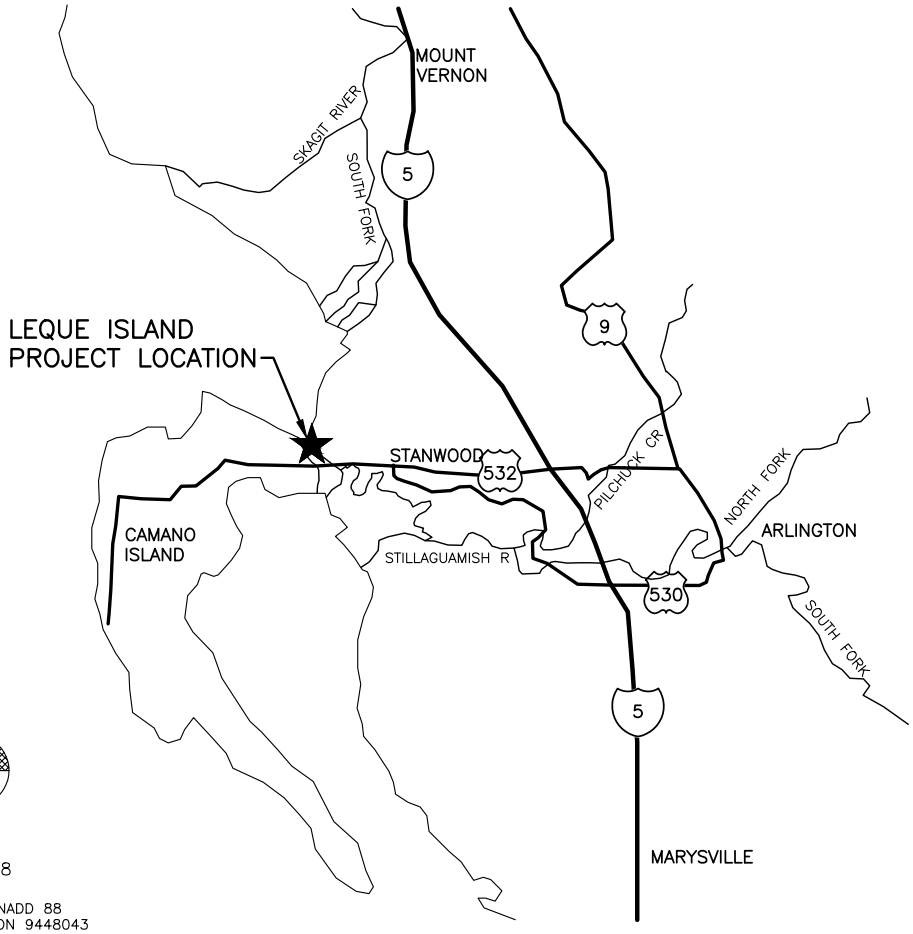

NAVD 88

MLLW = −2.03 NADD 88
NOAA TIDE STATION 9448043
TULARE BEACH, PORT SUSAN,
WA

VICINITY MAP
NOT TO SCALE

LEGAL DESCRIPTION:

GOVERNMENT LOTS 5 & 6 AND ASSOCIATED SECOND CLASS TIDELANDS.

PARCEL: 32032300300100
32032300400900
32032300300200

ADDRESS:
16998 WA−532
STANWOOD, WA 98292

DIRECTIONS
HEAD WEST FROM I−5 (EXIT 212) TOWARD WA−532, CONTINUE ON WA−532 FOR 6.8 MILES TO ACCESS ON RIGHT.

ENG. PROJECT NO. ST:R127:2018−2 PORTION OF: T 32N,R 3E,S 23 W.M. DRAWN BY: N. WHITE

REFERENCE NUMBER:

APPLICANT:

WASHINGTON DEPT. of FISH & WILDLIFE
600 CAPITOL WAY N.
OLYMPIA, WA 98501−1091

ADJACENT PROPERTY OWNER:

1.

2

PROJECT LOCATION (ADDRESS):

16998 WA−532
STANWOOD, WA 98292

LAT/LONG: LAT/LONG
DATUM: NAVD 88/LIDAR
SHEET 1 OF 6 DATE: 2/18/2020

PROPOSED PROJECT:
NORTH LEQUE
RESTORATION

IN: WEST PASS STILLAGUAMISH RIVER
NEAR/AT: STANWOOD
COUNTY: SNOHOMISH
STATE: WA

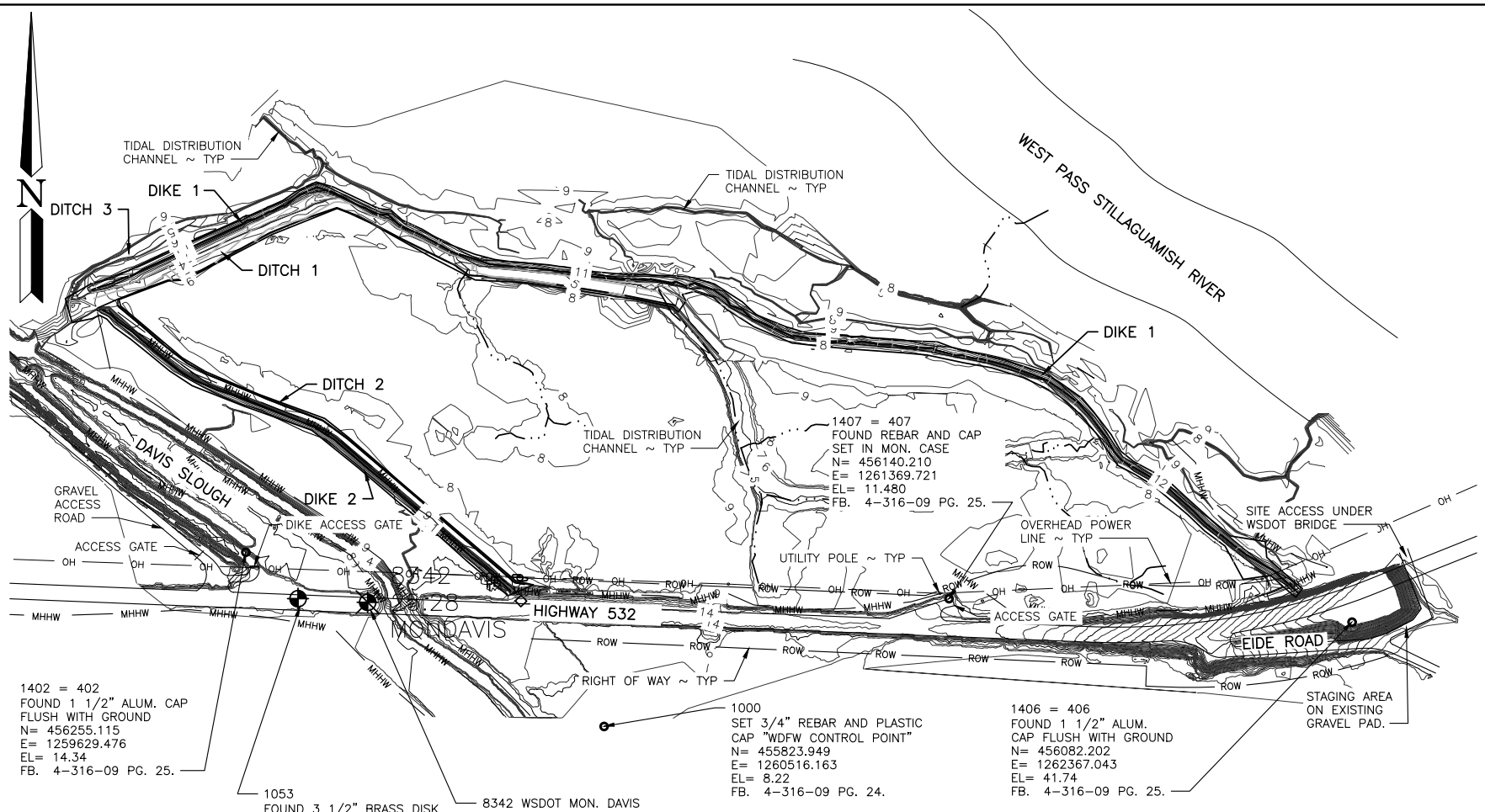

EXISTING SITE PLAN

SCALE: 1" = 100'

NOTE:

CONTOURS GENERATED BY LIDAR AND LIMITED FIELD SURVEY DATA

APPROXIMATE EARTHWORK QUANTITIES	
DIKE CUT	4,900 CY
PLUG, SPOILS, TIDAL CHANNEL FILL	4,900 CY
AREA OF DISTURBANCE	92,000 SF (2.1 ACRES)

ENG. PROJECT NO. ST:R127:2018-2

DRAWN BY: N. WHITE

REFERENCE NUMBER:

APPLICANT NAME: WASHINGTON DEPT. of FISH & WILDLIFE

PROPOSED PROJECT: NORTH LEQUE RESTORATION

LOCATION: SKAGIT WLA - LEQUE UNIT

SHEET 2 OF 6

DATE: 2/18/2020

APPROXIMATE EARTHWORK QUANTITIES	
DIKE CUT	4,900 CY
PLUG, SPOILS, TIDAL CHANNEL FILL	4,900 CY
AREA OF DISTURBANCE	92,000 SF (2.1 ACRES)

POINT DATA

POINT #	EASTING	NORTHING	DESCRIPTION
5001	1262115.37	456270.24	TIDAL CHAN A1
5002	1261802.96	456502.03	TIDAL CHAN A2
5003	1261350.15	456772.77	TIDAL CHAN A3
5004	1261000.88	456804.14	TIDAL CHAN A4
5005	1260624.72	456928.21	TIDAL CHAN A5
5006	1259982.57	457084.98	TIDAL CHAN A6
5007	1259827.13	457154.91	TIDAL CHAN A7
5008	1259624.86	457082.39	TIDAL CHAN A8
5010	1260547.84	456909.84	PLUG
5011	1259896.33	457108.17	PLUG
5013	1259681.16	457058.72	PLUG
5014	1259318.28	456985.72	PLUG
5015	1259211.54	456855.74	PLUG

NOTES:

TIDAL CHANNELS A1 – A4 SEE DETAILS 1 & B SHEET 6
TIDAL CHANNELS A5 – A8 SEE DETAILS 2 & B SHEET 6
DITCH PLUGS 1 – 4 SEE DETAILS 4 & A SHEET 5

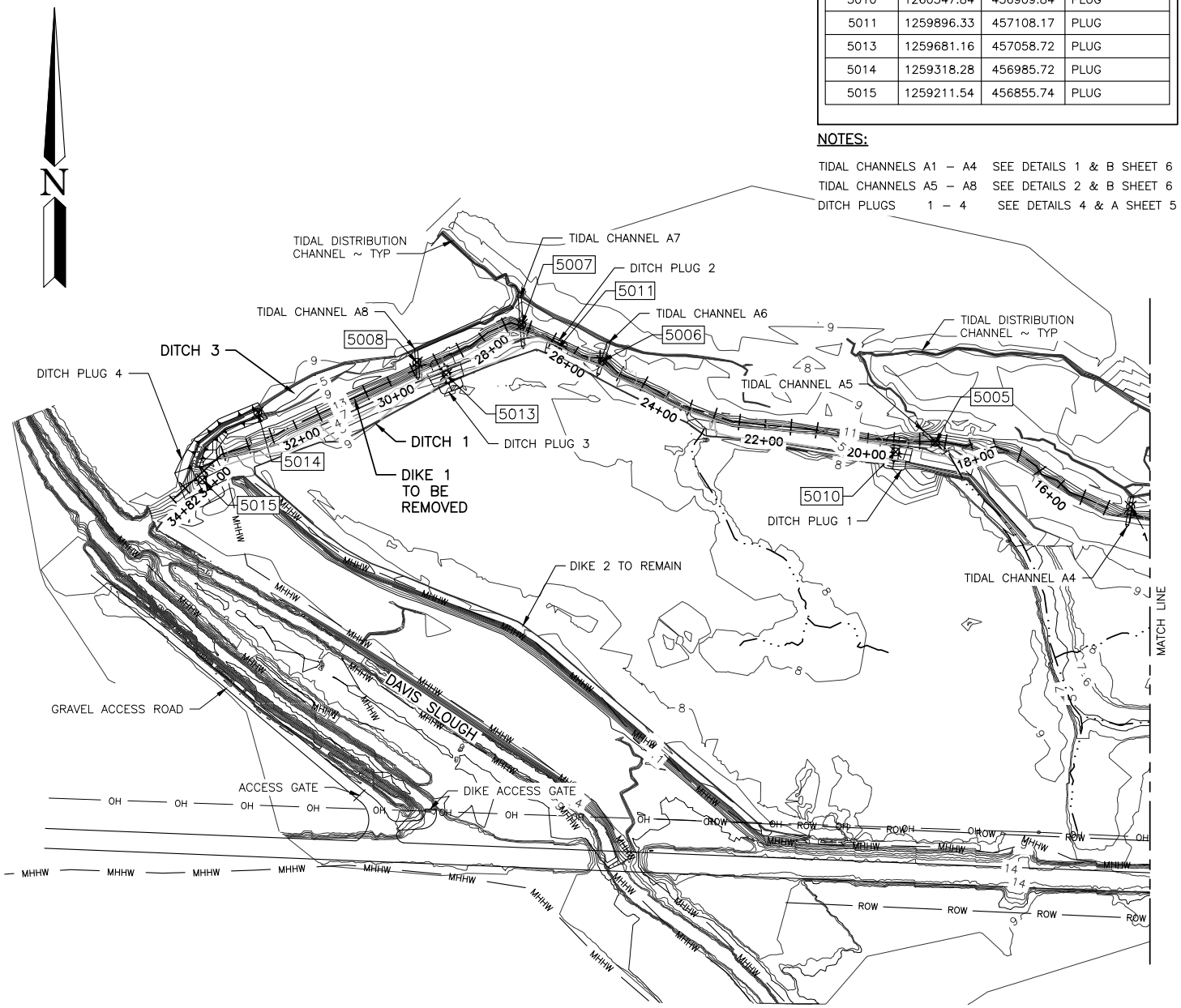

NEW SITE PLAN (WEST)

SCALE: 1" = 300'

DIKE 2 FUTURE PHASE 2 PROJECT
CUT DIKE IN TO LOCATIONS TO ESTUARY ELEVATION

0 100 200 300
50 150 250 450
SCALE: 1" = 300'

REFERENCE NUMBER:
APPLICANT NAME:
WASHINGTON DEPT. of FISH & WILDLIFE
PROPOSED PROJECT:
NORTH LEQUE RESTORATION
LOCATION: SKAGIT WLA – LEQUE UNIT
SHEET 3 OF 6 DATE: 2/18/2020

ENG. PROJECT NO. ST:R127:2018–2
DRAWN BY: N. WHITE

APPROXIMATE EARTHWORK QUANTITIES	
DIKE CUT	4,900 CY
PLUG, SPOILS, TIDAL CHANNEL FILL	4,900 CY
AREA OF DISTURBANCE	92,000 SF (2.1 ACRES)

POINT DATA

POINT #	EASTING	NORTHING	DESCRIPTION
5001	1262115.37	456270.24	TIDAL CHAN A1
5002	1261802.96	456502.03	TIDAL CHAN A2
5003	1261350.15	456772.77	TIDAL CHAN A3
5004	1261000.88	456804.14	TIDAL CHAN A4
5005	1260624.72	456928.21	TIDAL CHAN A5
5006	1259982.57	457084.98	TIDAL CHAN A6
5007	1259827.13	457154.91	TIDAL CHAN A7
5008	1259624.86	457082.39	TIDAL CHAN A8
5010	1260547.84	456909.84	PLUG
5011	1259896.33	457108.17	PLUG
5013	1259681.16	457058.72	PLUG
5014	1259318.28	456985.72	PLUG
5015	1259211.54	456855.74	PLUG

NOTES:

TIDAL CHANNELS A1 – A4 SEE DETAILS 1 & B SHEET 6
TIDAL CHANNELS A5 – A8 SEE DETAILS 2 & B SHEET 6
DITCH PLUGS 1 – 4 SEE DETAILS 4 & A SHEET 5

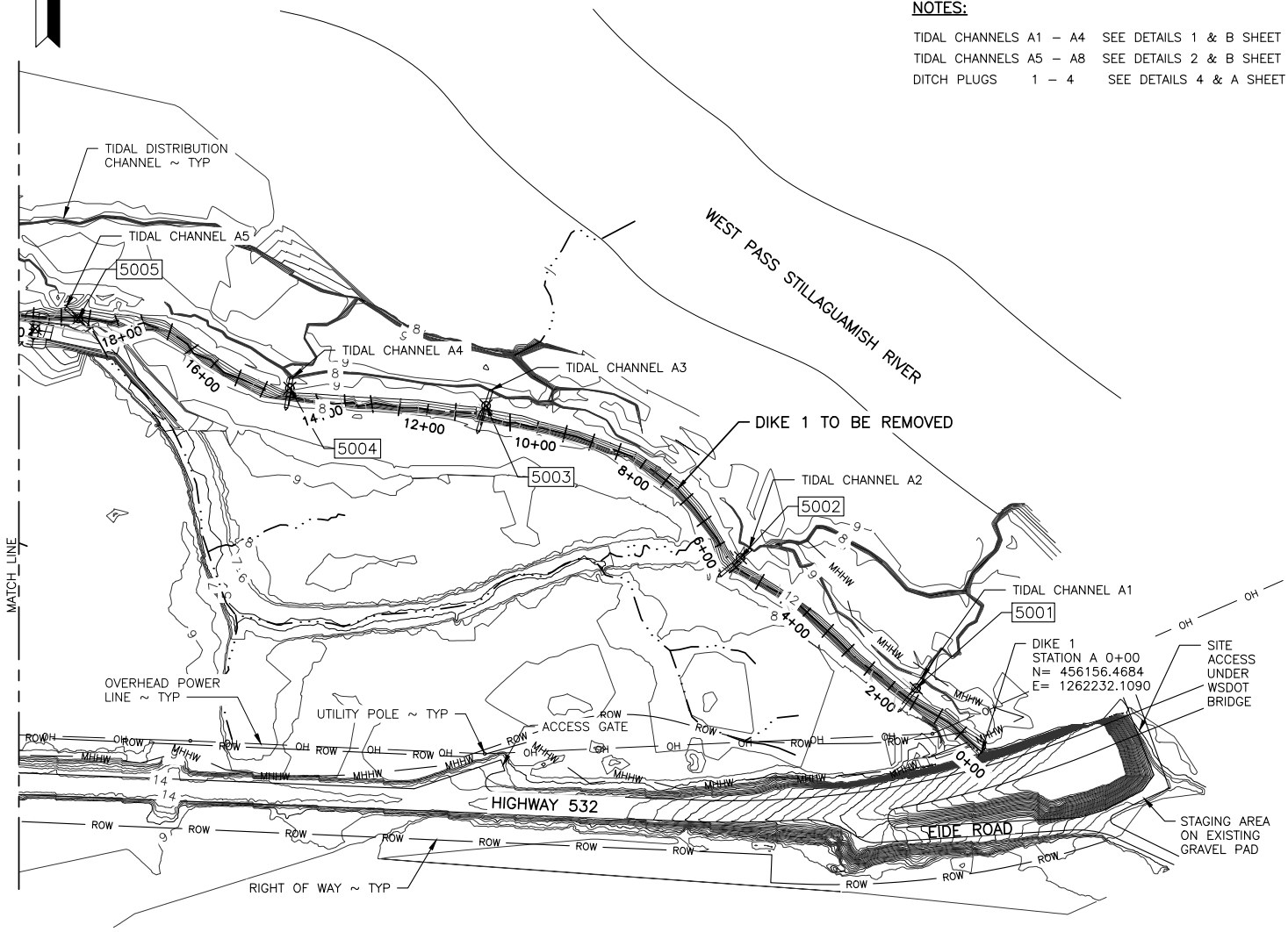

NEW SITE PLAN (EAST)

SCALE: 1" = 300'

0 100 200 300
50 150 250 450
SCALE: 1" = 300'

REFERENCE NUMBER:
APPLICANT NAME:
WASHINGTON DEPT. of FISH & WILDLIFE
PROPOSED PROJECT:
NORTH LEQUE RESTORATION
LOCATION: SKAGIT WLA – LEQUE UNIT
SHEET 4 OF 6 DATE: 2/18/2020

ENG. PROJECT NO. ST:R127:2018–2

DRAWN BY: N. WHITE

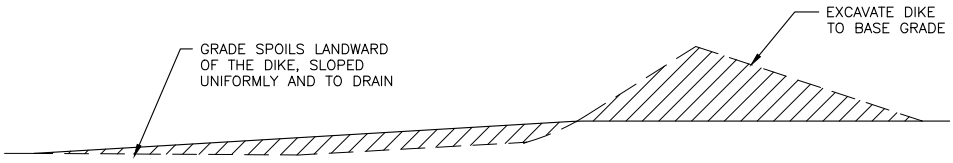

TYPICAL DIKE REMOVAL STATION 0+00± – 18+50±

SCALE: 1" = 4'

3 / 5 5

NOTE:

TRANSPORT & STOCKPILE DIKE MATERIAL FOR USE IN PLUGS. USE EXCESS MATERIAL FOR SPOILS

TIDAL CHANNEL				
CHANNEL #	STATION #	APPROX LENGTH	BOTTOM WIDTH	INVERT ELEVATION
A1	A1+60	50	6	7.5
A2	A5+60	60	6	7.0
A3	A11+15	55	10	7.0
A4	A14+50	40	6	7.0
A5	A18+50	100	6	5.6
A6	A24+90	45	6	5.5
A7	A27+20	75	10	4.7
A8	A29+50	200	12	5.2

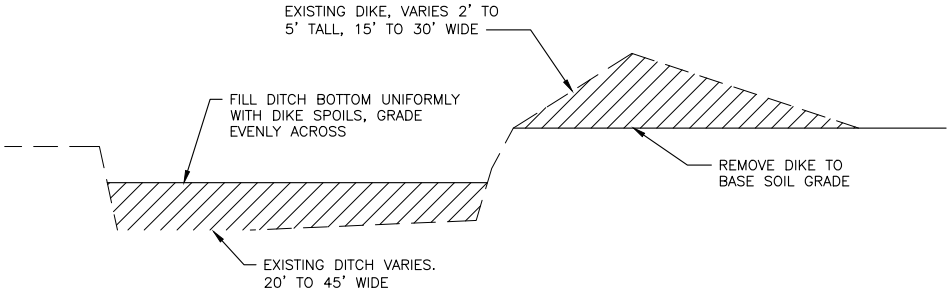

TYPICAL DIKE REMOVAL/ DITCH FILL STATION 18+50± – 34+00±

NOT TO SCALE

5 / 5 5

NOTE:

TRANSPORT & STOCKPILE DIKE MATERIAL FOR USE IN PLUGS. USE EXCESS MATERIAL FOR DITCH FILL.

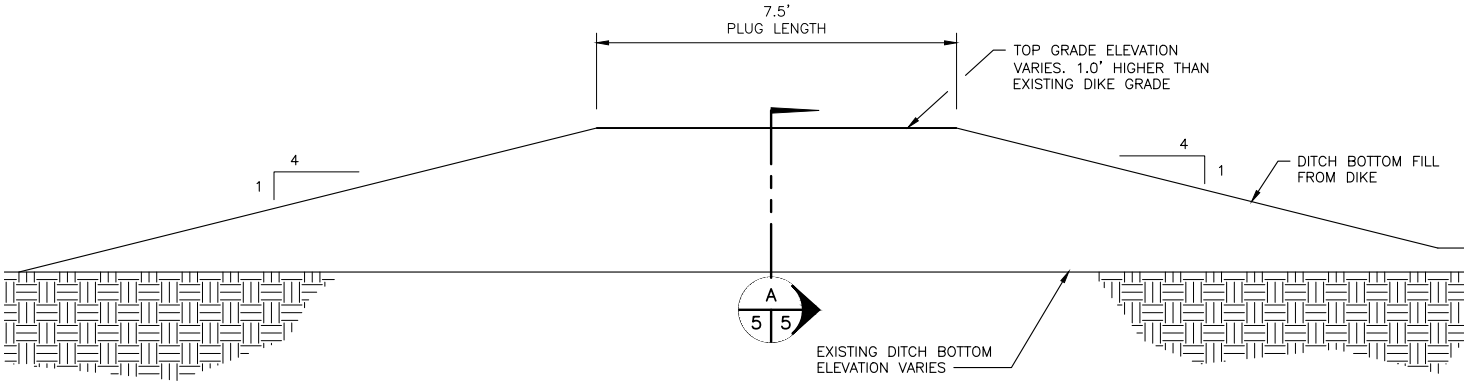

TYPICAL DITCH PLUG PROFILE ALONG DITCH

SCALE: 1" = 8'

4 / 5 5

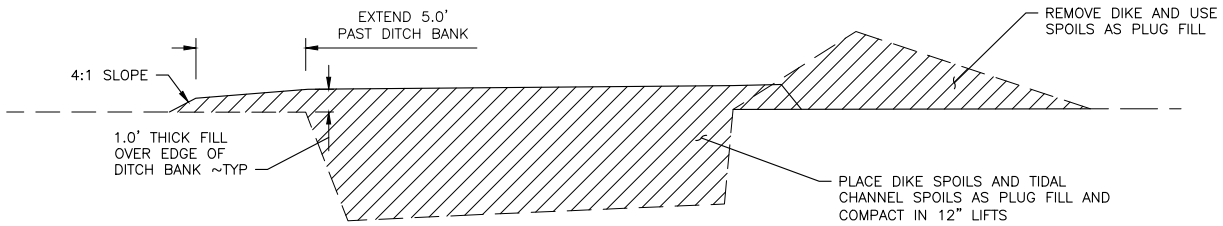

TYPICAL DITCH PLUG SECTION

SCALE: 1" = 8'

A / 5 5

REFERENCE NUMBER:

APPLICANT NAME:

WASHINGTON DEPT. of FISH & WILDLIFE

PROPOSED PROJECT:

NORTH LEQUE RESTORATION

LOCATION: SKAGIT WLA – LEQUE UNIT

SHEET 5 OF 6 DATE: 2/18/2020

ENG. PROJECT NO. ST:R127:2018–2

DRAWN BY: N. WHITE

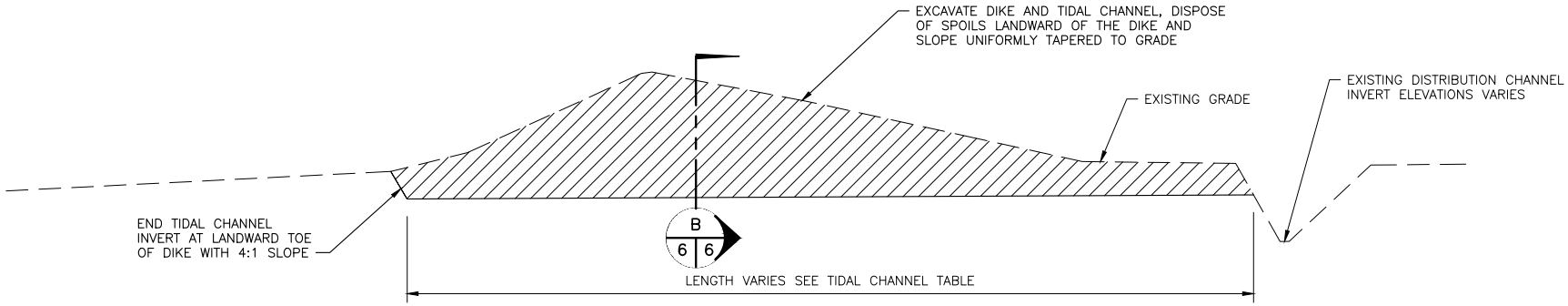

TYPICAL TIDAL CHANNEL PROFILE (A1–A4)

SCALE: 1" = 4'

1 / 6 6

NOTE:
DO NOT SPREAD SPOILS AT MOUTH OF TIDAL CHANNELS. LEAVE CLEAR FOR WATER FLOW

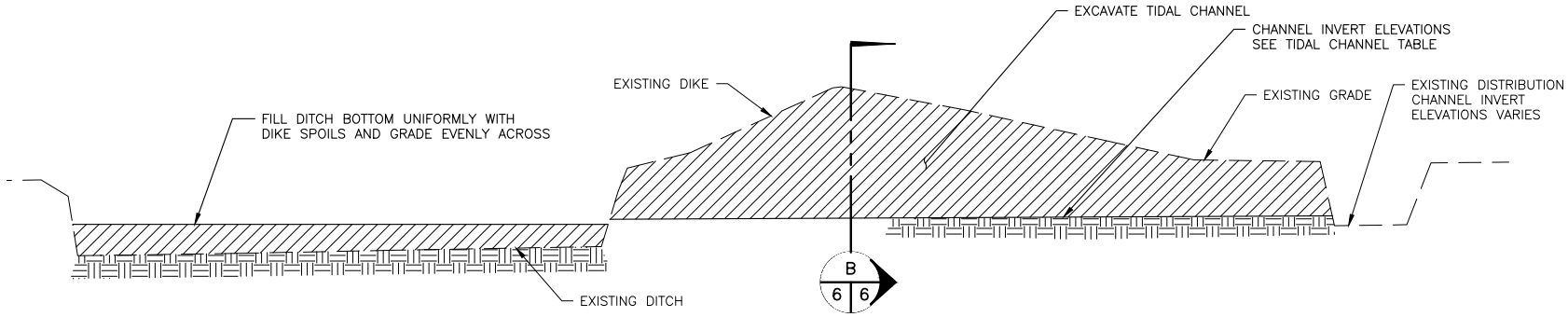

TYPICAL TIDAL CHANNEL PROFILE (A5–A7)

SCALE: 1" = 10'

2 / 6 6

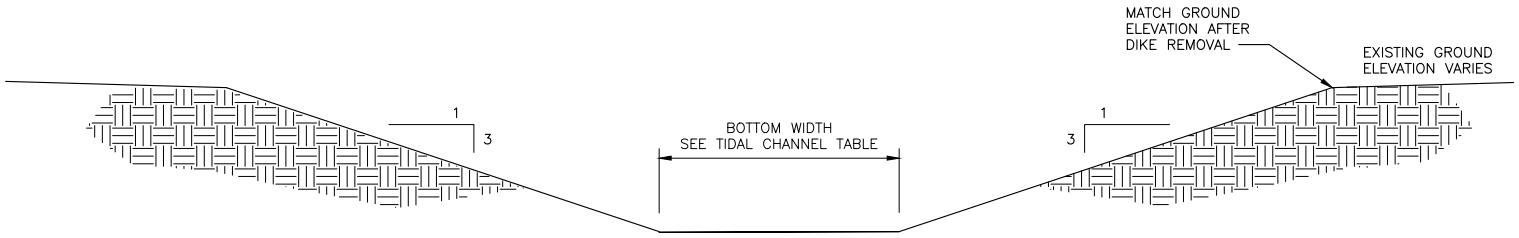

TYPICAL TIDAL CHANNEL SECTION

SCALE: 1" = 4'–0"

B / 6 6

ENG. PROJECT NO. ST:R127:2018–2

DRAWN BY: N. WHITE

REFERENCE NUMBER:

APPLICANT NAME:
WASHINGTON DEPT. of FISH & WILDLIFE

PROPOSED PROJECT:
NORTH LEQUE RESTORATION

LOCATION: SKAGIT WLA – LEQUE UNIT

SHEET 6 OF 6 DATE: 2/18/2020