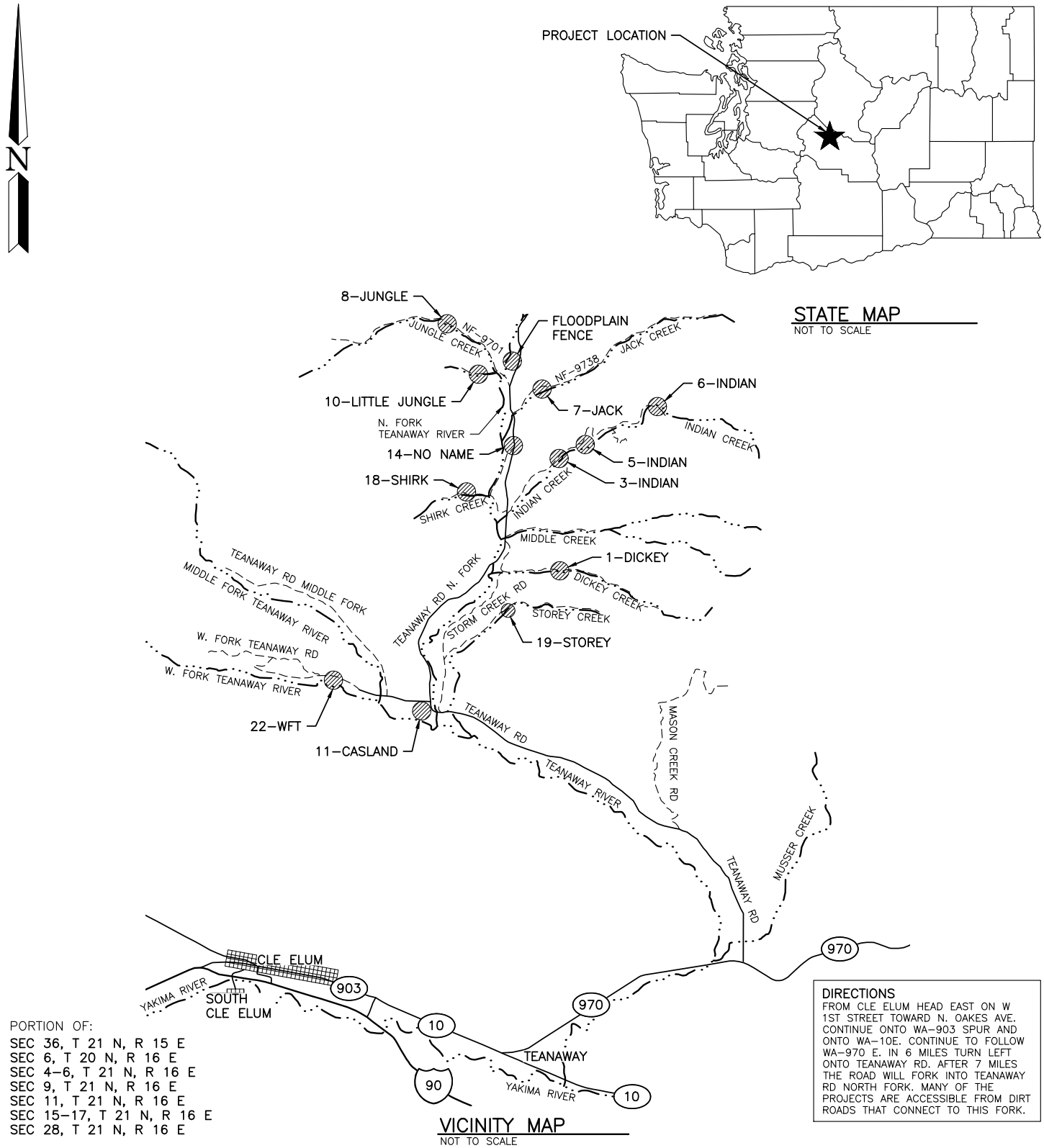

PORTION OF:

SEC 36, T 21 N, R 15 E
SEC 6, T 20 N, R 16 E
SEC 4–6, T 21 N, R 16 E
SEC 9, T 21 N, R 16 E
SEC 11, T 21 N, R 16 E
SEC 15–17, T 21 N, R 16 E
SEC 28, T 21 N, R 16 E

DIRECTIONS
FROM CLE ELUM HEAD EAST ON W 1ST STREET TOWARD N. OAKES AVE. CONTINUE ONTO WA–903 SPUR AND ONTO WA–10E. CONTINUE TO FOLLOW WA–970 E. IN 6 MILES TURN LEFT ONTO TEANAWAY RD. AFTER 7 MILES THE ROAD WILL FORK INTO TEANAWAY RD NORTH FORK. MANY OF THE PROJECTS ARE ACCESSIBLE FROM DIRT ROADS THAT CONNECT TO THIS FORK.

ENG. PROJECT NO. KS:R199:2019–1

DRAWN BY: N. BRUTZMAN

REFERENCE NUMBER:

APPLICANT:
WASHINGTON DEPT. of FISH & WILDLIFE
600 CAPITOL WAY N.
OLYMPIA, WA 98501–1091

ADJACENT PROPERTY OWNER:
1. DEPT. OF NATURAL RESOURCES
2 WENATCHEE NATIONAL FOREST

PROJECT LOCATION (ADDRESS):
TEANAWAY COMMUNITY FOREST
1361 BALLARD RD W
CLE ELUM, WA 98922

LAT/LONG: MULTIPLE SITES
DATUM: NAVD 88
SHEET 1 OF 23 DATE: 06/01/2020

PROPOSED PROJECT:
TEANAWAY COMMUNITY FOREST
GRAZING PLAN IMPROVEMENTS

IN: NORTH FORK TEANAWAY RIVER
NEAR/AT: CLE ELUM
COUNTY: KITTITAS
STATE: WA

POINT DATA			
POINT #	EASTING	NORTHING	DESCRIPTION
2	1537843.01	703892.28	TO EXIST
3	1537795.07	703767.80	CORNER
4	1537922.61	703698.77	H-BRACE
5	1538050.15	703629.75	CORNER
6	1538096.84	703754.33	TO EXIST
83	1537969.92	703823.30	H-BRACE

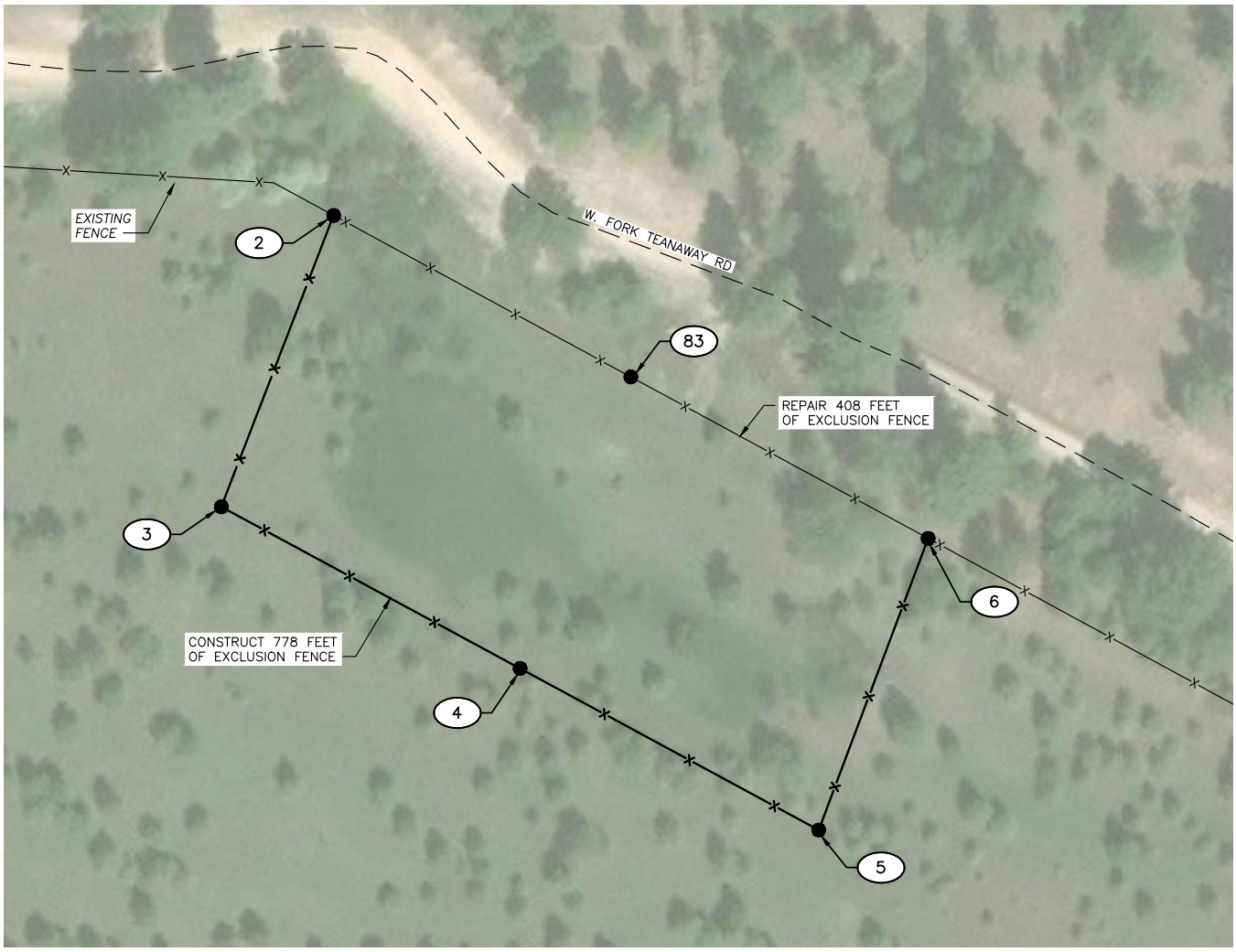

PORTION OF:
SEC 36, T 21 N, R 15 E
LAT/LONG:
N47.262634/W120.913036

22-WFT SITE
NOT TO SCALE

REFERENCE NUMBER:
APPLICANT NAME:
WASHINGTON DEPT. of FISH & WILDLIFE
PROPOSED PROJECT:
GRAZING PLAN IMPROVEMENTS
LOCATION: TEANAWAY COMMUNITY FOREST
SHEET 2 OF 23 DATE: 06/01/2020

ENG. PROJECT NO. KS:R199:2019-1

DRAWN BY: N. BRUTZMAN

POINT DATA			
POINT #	EASTING	NORTHING	DESCRIPTION
7	1543846.48	700952.17	TO EXIST
8	1544035.59	700952.17	CORNER
9	1545334.56	700614.97	TO EXIST
10	1544468.58	700886.57	H-BRACE
11	1544901.57	700820.97	H-BRACE
84	1543870.48	700952.17	20 FT GATE
90	1545334.56	700755.37	CORNER

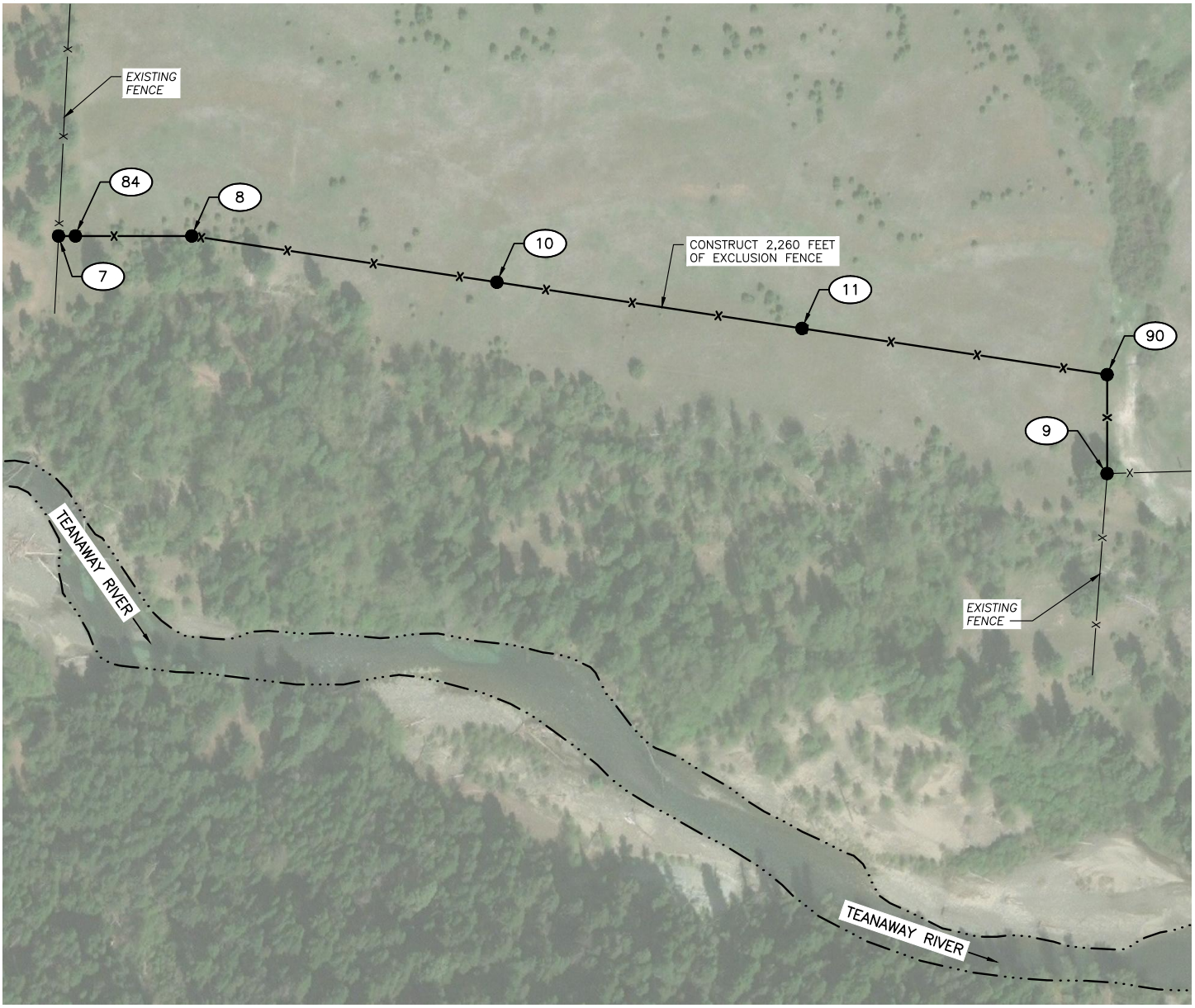

PORTION OF:
SEC 6, T 20 N, R 16 E
LAT/LONG:
N47.254084/W120.884720

11-CASLAND SITE
NOT TO SCALE

REFERENCE NUMBER:
APPLICANT NAME:
WASHINGTON DEPT. of FISH & WILDLIFE
PROPOSED PROJECT:
GRAZING PLAN IMPROVEMENTS
LOCATION: TEANAWAY COMMUNITY FOREST
SHEET 3 OF 23 DATE: 06/01/2020

ENG. PROJECT NO. KS:R199:2019-1

DRAWN BY: N. BRUTZMAN

POINT DATA			
POINT #	EASTING	NORTHING	DESCRIPTION
12	1553516.23	710131.72	CORNER
13	1553536.12	710188.32	CORNER
14	1553477.15	710177.24	CORNER

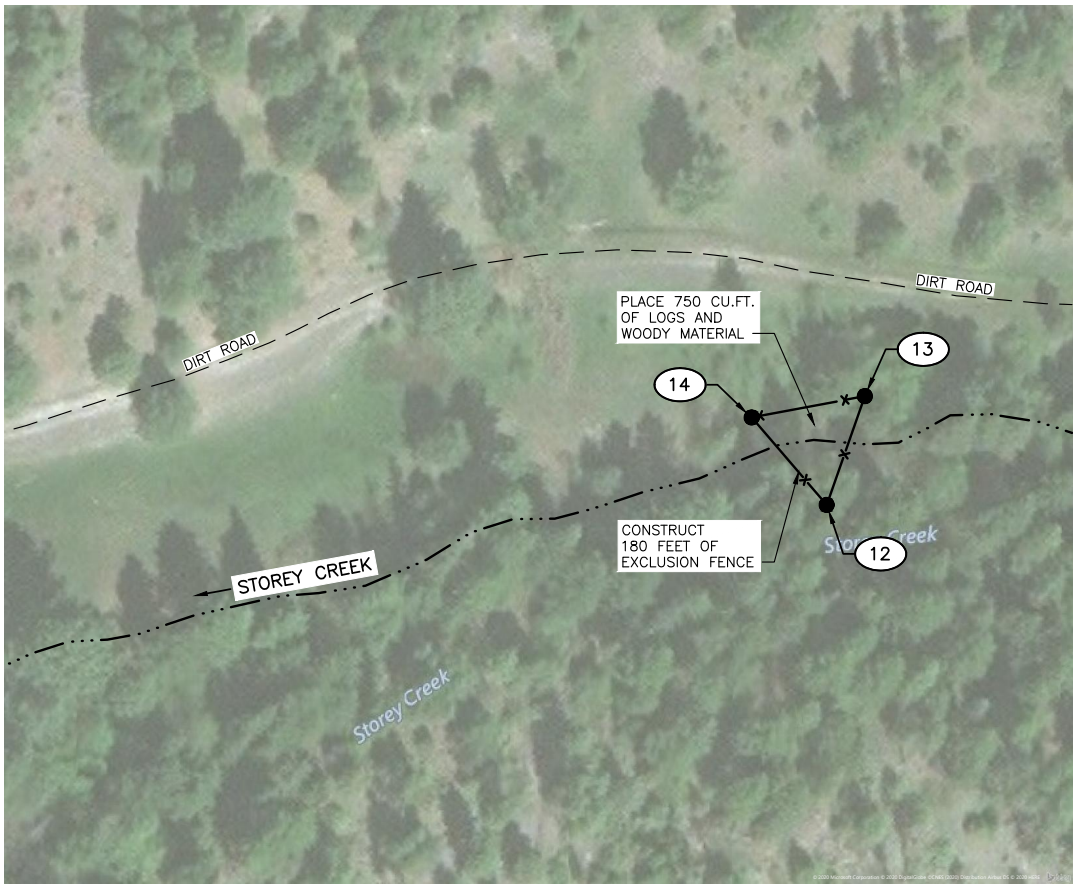

PORTION OF:
SEC 28, T 21 N, R 16 E
LAT/LONG:
N47.280176/W120.850469

19–STOREY SITE
NOT TO SCALE

REFERENCE NUMBER:
APPLICANT NAME:
WASHINGTON DEPT. of FISH & WILDLIFE
PROPOSED PROJECT:
GRAZING PLAN IMPROVEMENTS
LOCATION: TEANAWAY COMMUNITY FOREST
SHEET 4 OF 23 DATE: 06/01/2020

ENG. PROJECT NO. KS:R199:2019–1

DRAWN BY: N. BRUTZMAN

N

POINT DATA			
POINT #	EASTING	NORTHING	DESCRIPTION
15	1557188.28	712787.62	TIE TO TREE
16	1557202.49	712828.62	CORNER
17	1557415.33	712925.28	CORNER
18	1557439.34	712906.71	END BRACE
26	1557181.26	712785.18	CATTLE CROSSING

DICKEY SITE CUT AND FILL DATA CY.				
	BELOW OHW		ABOVE OHW	
	CUT	FILL	CUT	FILL
NATIVE MATERIAL	6.00	0.00	2.00	0.00
CROSSING MATERIAL	0.00	6.00	0.00	2.00
NET	0 CY		0 CY	
AREA (SQ.FT.)	200		200	

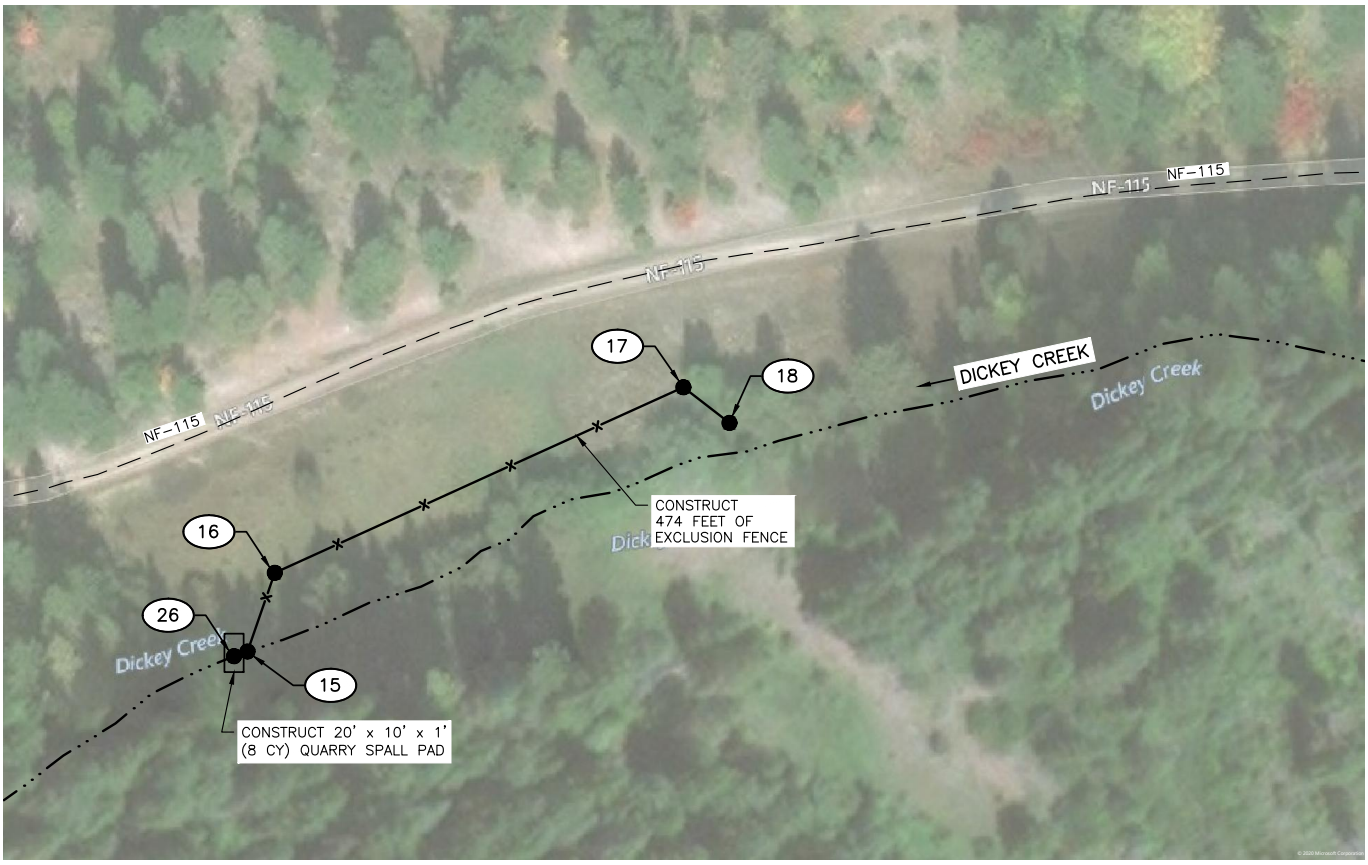

PORTION OF:
SEC 28, T 21 N, R 16 E
LAT/LONG:
N47.287664/W120.834655

1–DICKEY SITE
NOT TO SCALE

REFERENCE NUMBER:
APPLICANT NAME:
WASHINGTON DEPT. of FISH & WILDLIFE
PROPOSED PROJECT:
GRAZING PLAN IMPROVEMENTS
LOCATION: TEANAWAY COMMUNITY FOREST
SHEET 5 OF 23 DATE: 06/01/2020

ENG. PROJECT NO. KS:R199:2019–1

DRAWN BY: N. BRUTZMAN

POINT DATA			
POINT #	EASTING	NORTHING	DESCRIPTION
19	1548706.32	719485.94	END BRACE
20	1548706.32	719504.68	CORNER
21	1548785.09	719534.46	CORNER
22	1548860.79	719535.75	CORNER
23	1548972.88	719504.15	CORNER
24	1549070.68	719425.20	CORNER
25	1549082.29	719367.20	END BRACE

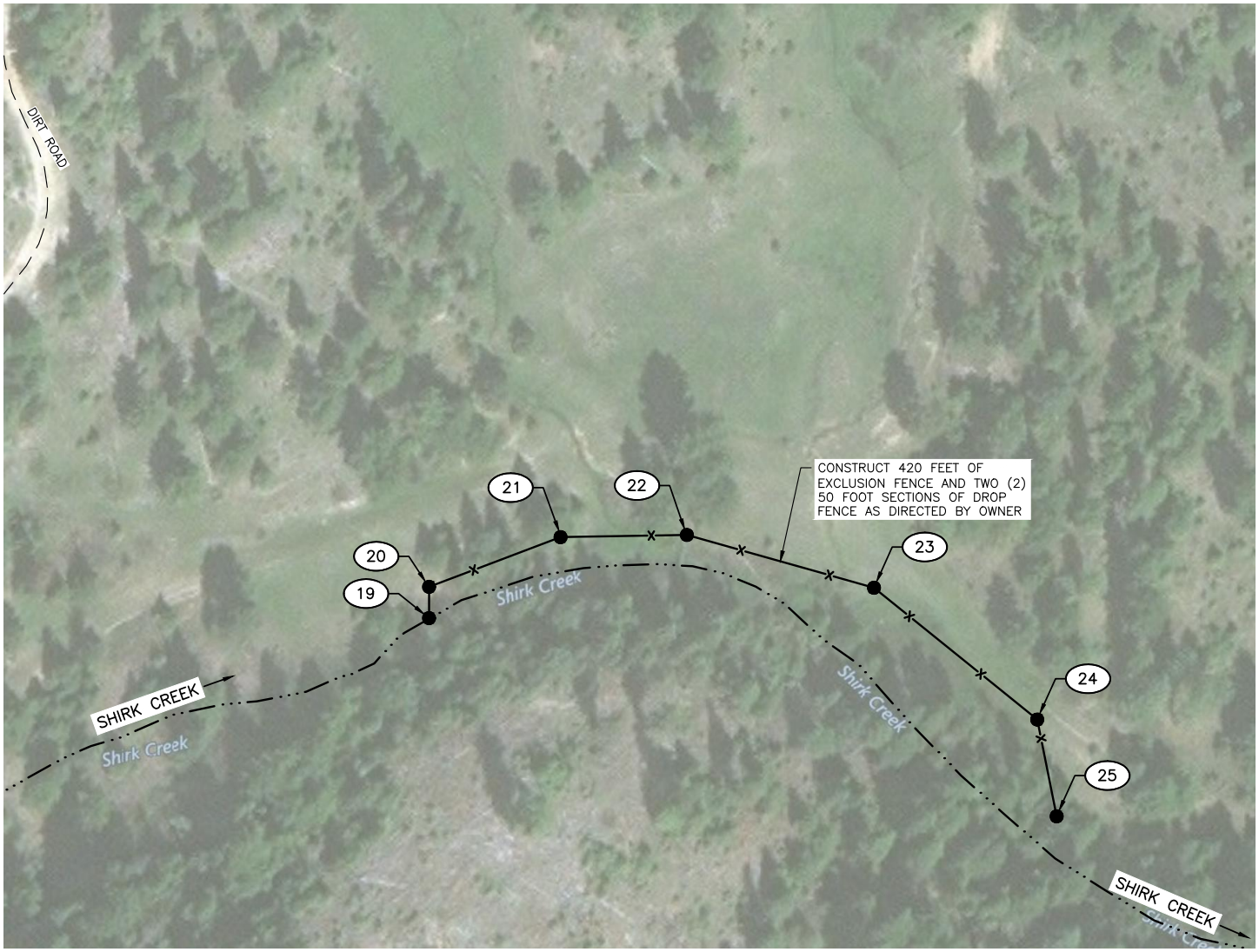

PORTION OF:
SEC 17, T 21 N, R 16 E
LAT/LONG:
N47.305796/W120.868978

18–SHIRK SITE
NOT TO SCALE

REFERENCE NUMBER:
APPLICANT NAME:
WASHINGTON DEPT. of FISH & WILDLIFE
PROPOSED PROJECT:
GRAZING PLAN IMPROVEMENTS
LOCATION: TEANAWAY COMMUNITY FOREST
SHEET 6 OF 23 DATE: 06/01/2020

ENG. PROJECT NO. KS:R199:2019–1

DRAWN BY: N. BRUTZMAN

POINT DATA			
POINT #	EASTING	NORTHING	DESCRIPTION
27	1556822.84	722133.10	CATTLE CROSSING

3–INDIAN SITE CUT AND FILL DATA CY.				
	BELOW OHW		ABOVE OHW	
	CUT	FILL	CUT	FILL
NATIVE MATERIAL	11.00	0.00	4.00	0.00
CROSSING MATERIAL	0.00	11.00	0.00	4.00
NET	0 CY		0 CY	
AREA (SQ.FT.)	400		400	

PORTION OF:
SEC 16, T 21 N, R 16 E
LAT/LONG:
N47.313021/W120.836905

3–INDIAN SITE
NOT TO SCALE

REFERENCE NUMBER:
APPLICANT NAME:
WASHINGTON DEPT. of FISH & WILDLIFE
PROPOSED PROJECT:
GRAZING PLAN IMPROVEMENTS
LOCATION: TEANAWAY COMMUNITY FOREST
SHEET 7 OF 23 DATE: 06/01/2020

ENG. PROJECT NO. KS:R199:2019–1

DRAWN BY: N. BRUTZMAN

POINT DATA			
POINT #	EASTING	NORTHING	DESCRIPTION
28	1559020.19	723436.49	CATTLE CROSSING

5–INDIAN SITE CUT AND FILL DATA CY.				
	BELOW OHW		ABOVE OHW	
	CUT	FILL	CUT	FILL
NATIVE MATERIAL	16.00	0.00	38.00	0.00
CROSSING MATERIAL	0.00	16.00	0.00	8.00
NET	0 CY		**30 CY Cut**	
AREA (SQ.FT.)	650		650	

PORTION OF:
SEC 15, T 21 N, R 16 E
LAT/LONG:
N47.316553/W120.828113

5–INDIAN SITE
NOT TO SCALE

REFERENCE NUMBER:
APPLICANT NAME:
WASHINGTON DEPT. of FISH & WILDLIFE
PROPOSED PROJECT:
GRAZING PLAN IMPROVEMENTS
LOCATION: TEANAWAY COMMUNITY FOREST
SHEET 8 OF 23 DATE: 06/01/2020

ENG. PROJECT NO. KS:R199:2019–1

DRAWN BY: N. BRUTZMAN

6–INDIAN SITE CUT AND FILL DATA CY.				
	BELOW OHW		ABOVE OHW	
	CUT	FILL	CUT	FILL
NATIVE MATERIAL	16.00	0.00	58.00	0.00
CROSSING MATERIAL	0.00	16.00	0.00	8.00
NET	0 CY		50 CY CUT	
AREA (SQ.FT.)	650		650	

POINT DATA			
POINT #	EASTING	NORTHING	DESCRIPTION
29	1565339.46	727084.23	CATTLE CROSSING
30	1565357.13	727116.75	CORNER
31	1565388.90	727152.73	20 FT GATE
32	1565535.98	727319.27	H–BRACE
33	1565683.06	727485.82	DROP FENCE
34	1565722.08	727530.00	STREAM CROSSING
35	1565726.09	727534.54	CORNER
36	1565802.71	727340.23	CORNER
37	1565690.18	727212.80	CORNER
38	1565813.78	727103.65	CORNER
39	1565669.72	726940.51	STREAM CROSSING
40	1565620.19	726884.43	CORNER
41	1565420.65	727060.66	DROP FENCE
42	1565383.17	727093.75	STREAM CROSSING

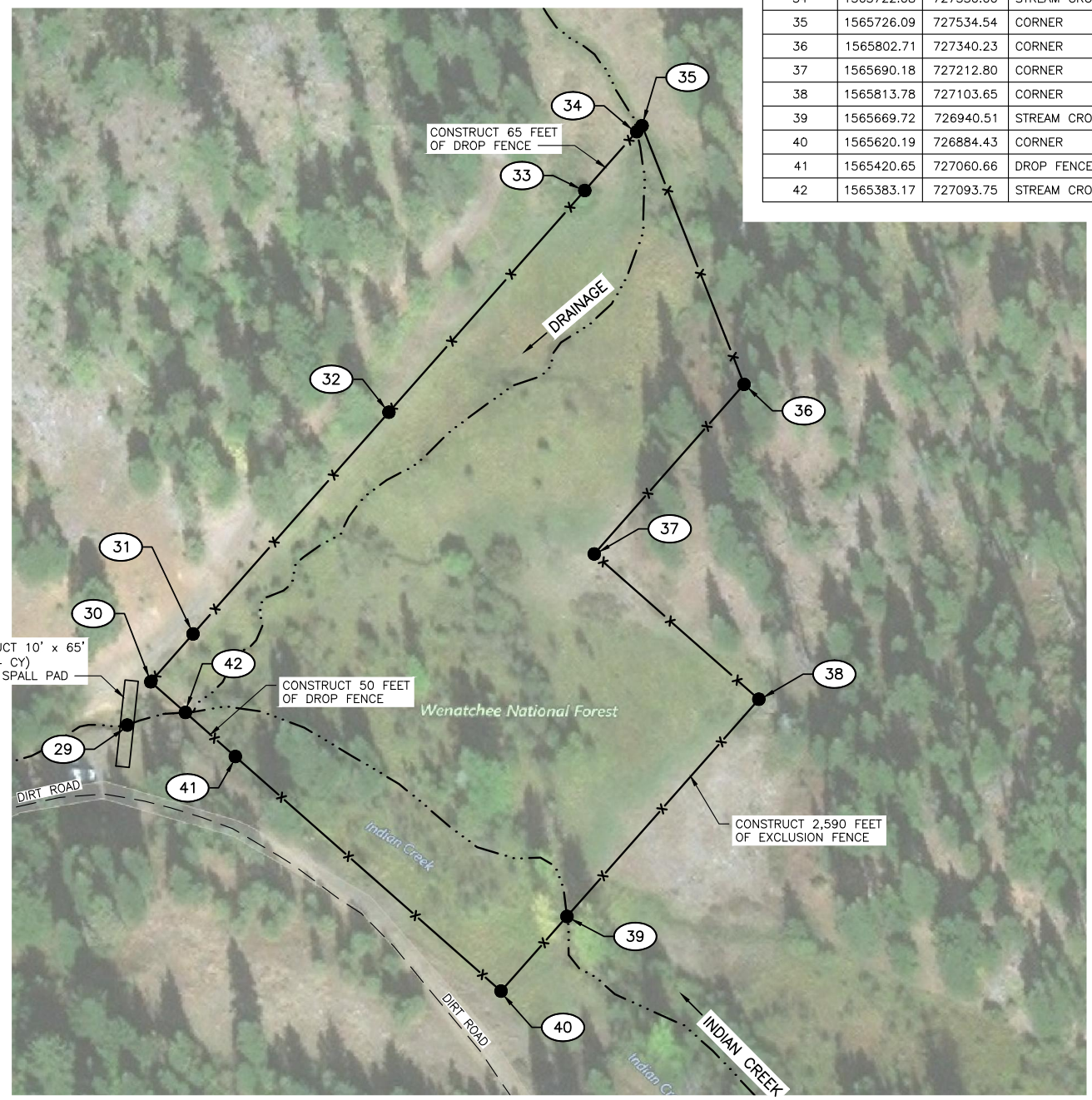

PORTION OF:
SEC 11, T 21 N, R 16 E
LAT/LONG:
N47.326769/W120.801602

6–INDIAN SITE
NOT TO SCALE

REFERENCE NUMBER:
APPLICANT NAME:
WASHINGTON DEPT. of FISH & WILDLIFE
PROPOSED PROJECT:
GRAZING PLAN IMPROVEMENTS
LOCATION: TEANAWAY COMMUNITY FOREST
SHEET 9 OF 23 DATE: 06/01/2020

ENG. PROJECT NO. KS:R199:2019–1

DRAWN BY: N. BRUTZMAN

14–NO NAME SITE CUT AND FILL DATA CY.				
	BELOW OHW		ABOVE OHW	
	CUT	FILL	CUT	FILL
NATIVE MATERIAL	16.00	0.00	32.00	0.00
CROSSING MATERIAL	0.00	16.00	0.00	32.00
NET	0 CY		0 CY	
AREA (SQ.FT.)	650		1,300	

POINT DATA			
POINT #	EASTING	NORTHING	DESCRIPTION
43	1552553.46	723646.64	TO EXIST
44	1552705.47	723690.81	CORNER
45	1552705.47	723716.62	STREAM CROSSING
46	1552705.47	723749.61	CORNER
47	1552564.67	723798.42	TO EXIST
48	1552727.09	723771.04	CORNER
49	1552876.82	723834.93	H–BRACE
50	1553044.40	723863.99	CORNER
51	1553044.40	723804.37	CORNER
52	1552936.91	723715.03	H–BRACE
53	1552846.73	723689.38	H–BRACE
54	1552727.09	723699.57	CORNER
55	1552727.09	723716.85	STREAM CROSSING
56	1552716.28	723716.74	CATTLE CROSSING
57	1553054.20	723837.07	CATTLE CROSSING

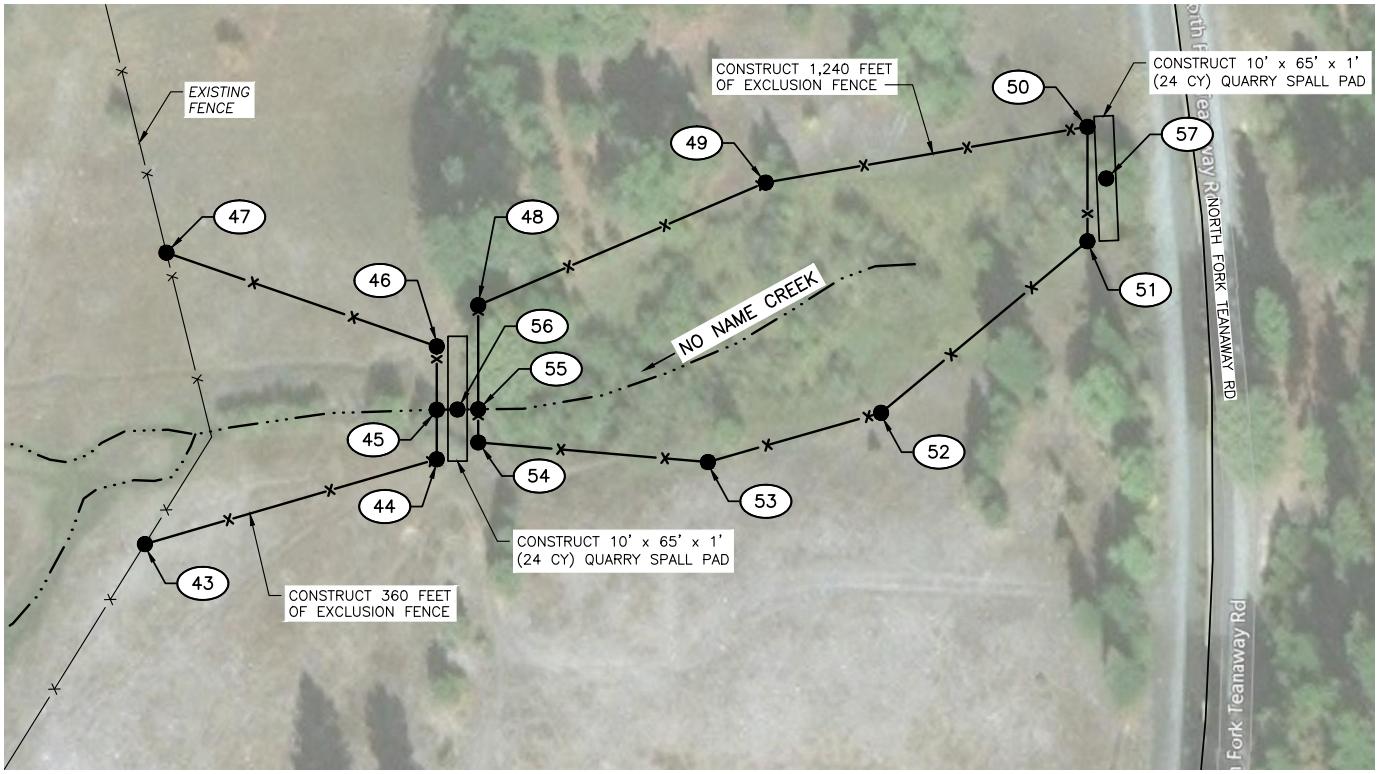

PORTION OF:
SEC 17, T 21 N, R 16 E
LAT/LONG:
N47.317457/W120.852831

14–NO NAME SITE
NOT TO SCALE

REFERENCE NUMBER:
APPLICANT NAME:
WASHINGTON DEPT. of FISH & WILDLIFE
PROPOSED PROJECT:
GRAZING PLAN IMPROVEMENTS
LOCATION: TEANAWAY COMMUNITY FOREST
SHEET 10 OF 23 DATE: 06/01/2020

ENG. PROJECT NO. KS:R199:2019–1

DRAWN BY: N. BRUTZMAN

7–JACK SITE CUT AND FILL DATA CY.				
	BELOW OHW		ABOVE OHW	
	CUT	FILL	CUT	FILL
NATIVE MATERIAL	8.00	0.00	5.00	0.00
CROSSING MATERIAL	0.00	8.00	0.00	5.00
NET	0 CY		0 CY	
AREA (SQ.FT.)	350		350	

POINT DATA			
POINT #	EASTING	NORTHING	DESCRIPTION
58	1556108.64	728363.88	TO EXIST
59	1556115.94	728396.73	STREAM CROSSING
60	1556119.48	728412.69	END BRACE
61	1556099.13	728411.90	LOG CENTER
62	1556136.11	728393.71	ARMORING EDGE

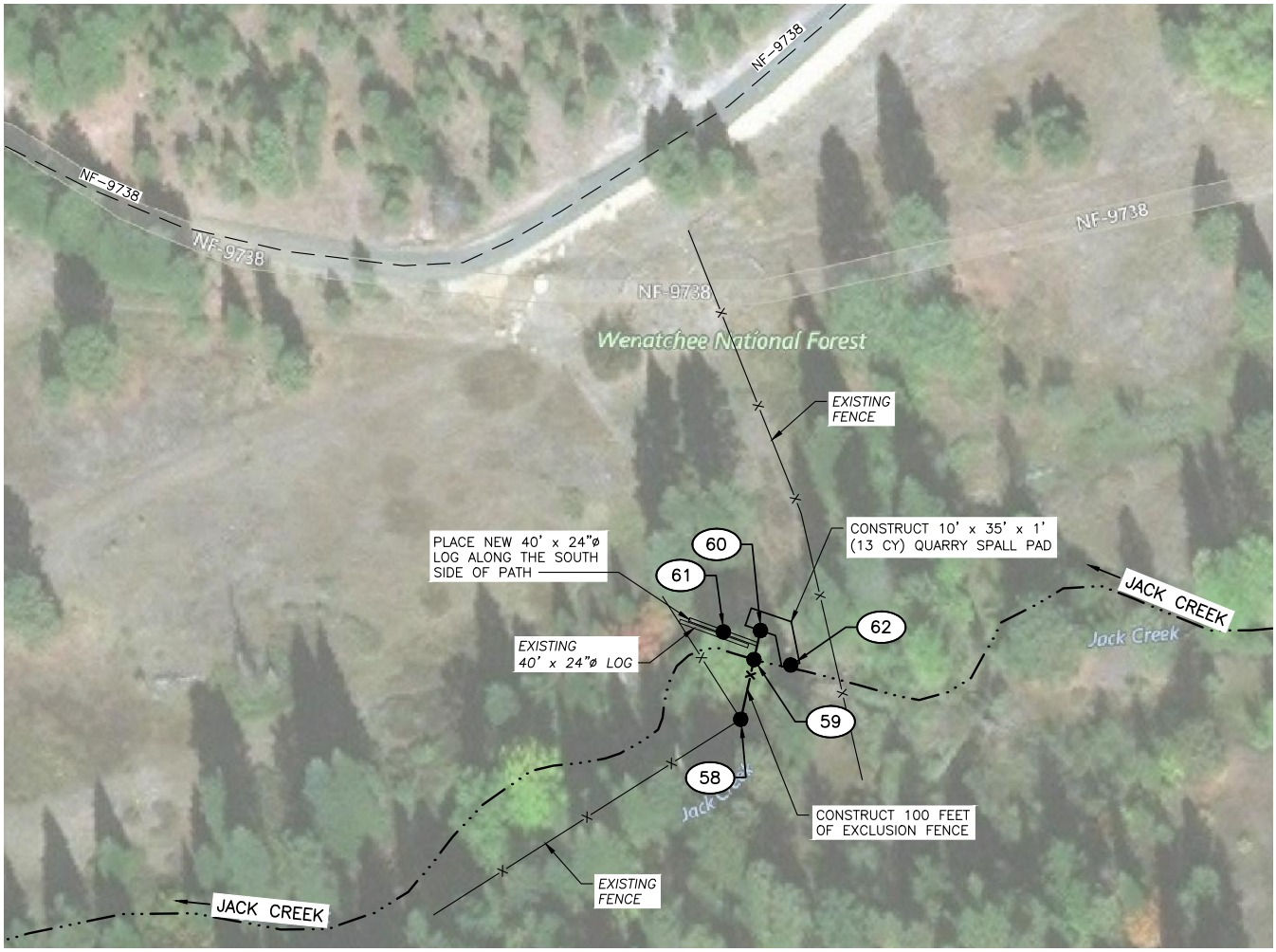

PORTION OF:
SEC 9, T 21 N, R 16 E
LAT/LONG:
N47.330177/W120.839939

7–JACK SITE
NOT TO SCALE

REFERENCE NUMBER:
APPLICANT NAME:
WASHINGTON DEPT. of FISH & WILDLIFE
PROPOSED PROJECT:
GRAZING PLAN IMPROVEMENTS
LOCATION: TEANAWAY COMMUNITY FOREST
SHEET 11 OF 23 DATE: 06/01/2020

ENG. PROJECT NO. KS:R199:2019–1

DRAWN BY: N. BRUTZMAN

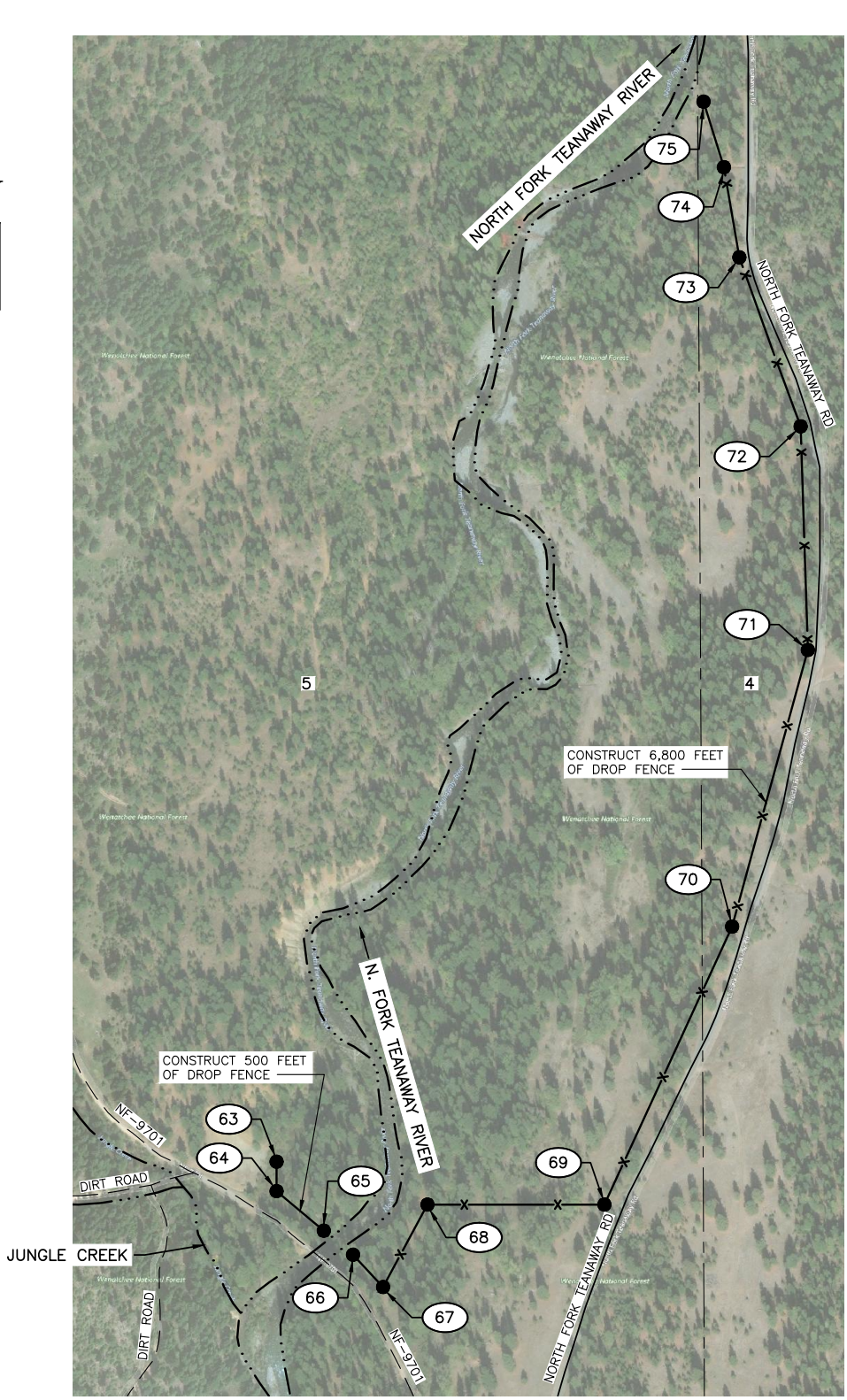

POINT DATA

POINT #	EASTING	NORTHING	DESCRIPTION
63	1552078.47	729894.39	END BRACE
64	1552078.47	729807.64	CORNER
65	1552217.41	729691.33	END BRACE
66	1552303.41	729620.68	END BRACE
67	1552391.87	729525.52	CORNER
68	1552522.46	729768.06	CORNER
69	1553043.16	729768.06	CORNER
70	1553418.84	730586.35	CORNER
71	1553641.84	731400.36	CORNER
72	1553620.50	732058.44	CORNER
73	1553440.18	732555.85	CORNER
74	1553394.69	732821.13	CORNER
75	1553334.87	733013.99	END BRACE

PORTION OF:
SEC 4 & 5, T 21 N, R 16 E
LAT/LONG:
N47.336556/W120.851000

FLOODPLAIN SITE
NOT TO SCALE

REFERENCE NUMBER:
APPLICANT NAME:
WASHINGTON DEPT. of FISH & WILDLIFE
PROPOSED PROJECT:
GRAZING PLAN IMPROVEMENTS
LOCATION: TEANAWAY COMMUNITY FOREST
SHEET 12 OF 23 DATE: 06/01/2020

ENG. PROJECT NO. KS:R199:2019-1
DRAWN BY: N. BRUTZMAN

POINT DATA			
POINT #	EASTING	NORTHING	DESCRIPTION
76	1550159.61	729643.91	END BRACE
77	1550161.87	729696.45	STREAM CROSSING
78	1550163.22	729727.72	CORNER
79	1550411.08	729823.77	CORNER
80	1550460.93	729804.49	CORNER
81	1550453.81	729760.59	STREAM CROSSING
82	1550449.71	729735.31	END BRACE

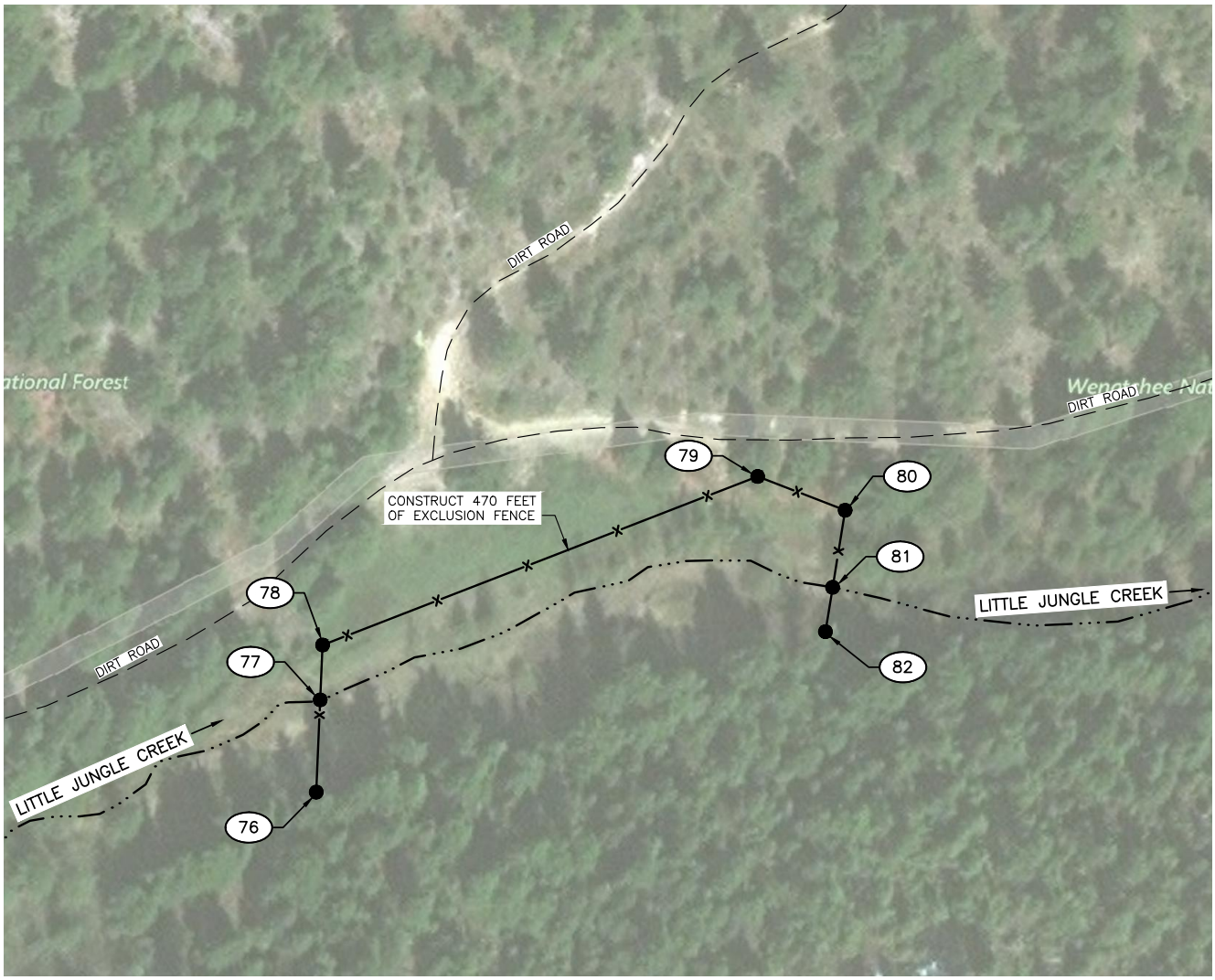

PORTION OF:
SEC 5, T 21 N, R 16 E
LAT/LONG:
N47.333835/W120.863381

10–LITTLE JUNGLE SITE

NOT TO SCALE

REFERENCE NUMBER:
APPLICANT NAME:
WASHINGTON DEPT. of FISH & WILDLIFE
PROPOSED PROJECT:
GRAZING PLAN IMPROVEMENTS
LOCATION: TEANAWAY COMMUNITY FOREST
SHEET 13 OF 23 DATE: 06/01/2020

ENG. PROJECT NO. KS:R199:2019–1

DRAWN BY: N. BRUTZMAN

POINT DATA			
POINT #	EASTING	NORTHING	DESCRIPTION
85	1547951.00	733457.73	END BRACE
86	1547951.00	733557.73	STREAM CROSSING
87	1547951.00	733727.73	END BRACE
88	1547951.00	733746.74	END BRACE
89	1547951.00	734301.74	END BRACE

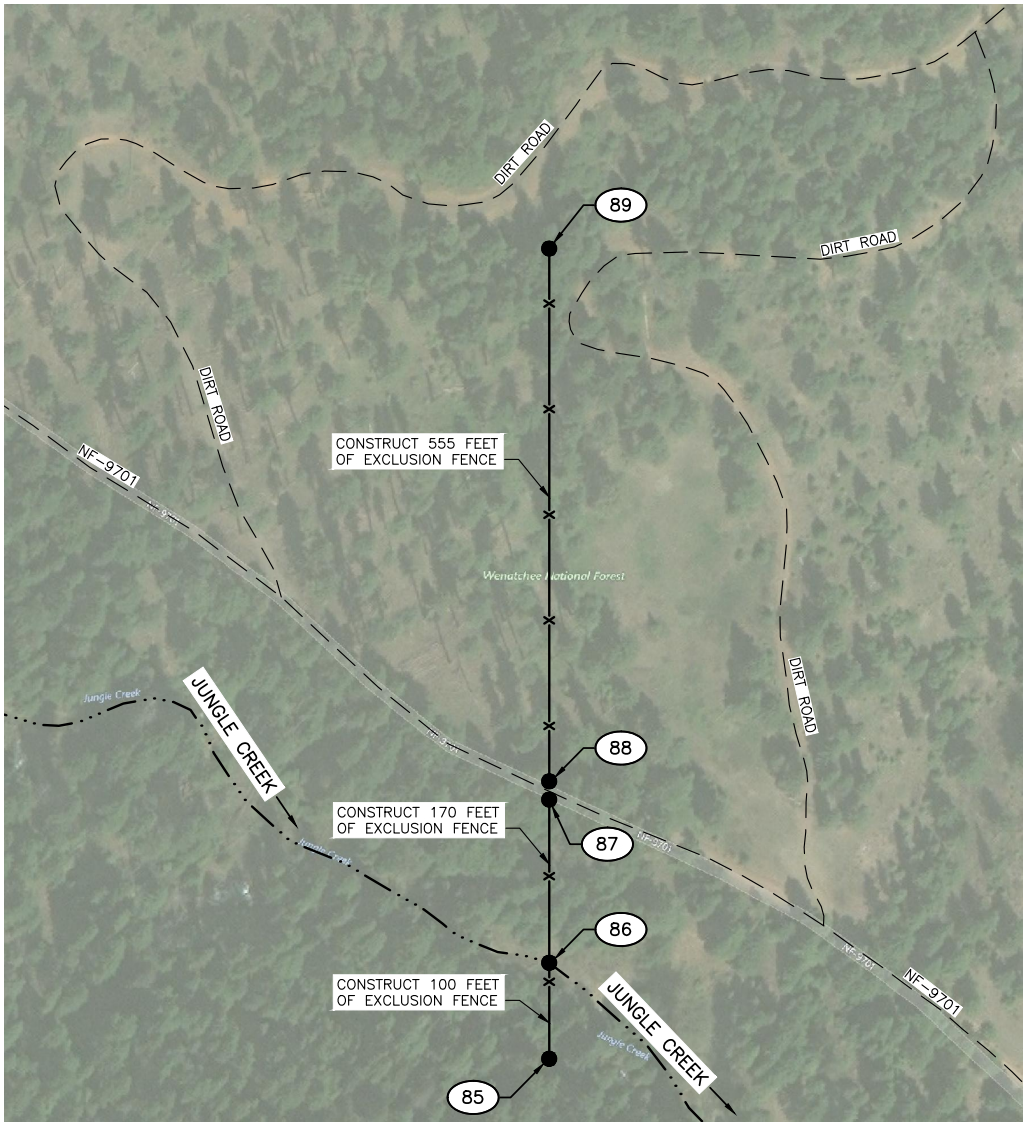

PORTION OF:
SEC 6, T 21 N, R 16 E
LAT/LONG:
N47.345124/W120.873129

8–JUNGLE SITE
NOT TO SCALE

REFERENCE NUMBER:
APPLICANT NAME:
WASHINGTON DEPT. of FISH & WILDLIFE
PROPOSED PROJECT:
GRAZING PLAN IMPROVEMENTS
LOCATION: TEANAWAY COMMUNITY FOREST
SHEET 14 OF 23 DATE: 06/01/2020

ENG. PROJECT NO. KS:R199:2019–1

DRAWN BY: N. BRUTZMAN

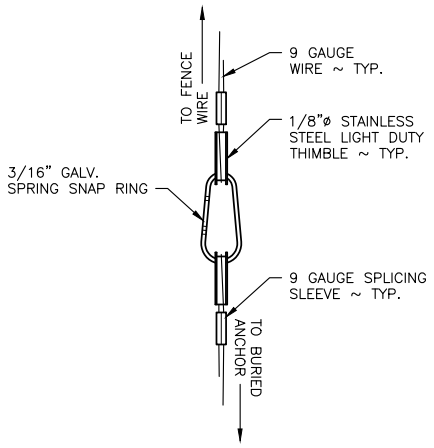

DETAIL
NOT TO SCALE

1
15 15

GENERAL NOTES:

A. SMOOTH TWIST WIRE SHALL BE 12 1/2 GAUGE, BARBLESS, WITH CLASS 3 GALVANIZING.

B. BARB WIRE SHALL BE 12 1/2 GAUGE WITH 4 POINT BARBS SPACED AT 5 INCHES WITH CLASS 3 GALVANIZING.

C. ALL VERTICAL STEEL BRACE AND HINGE POSTS SHALL HAVE A GALVANIZED METAL POST CAP.

D. IF DEPTH CANNOT BE REACHED DUE TO GROUND CONDITION USE ALTERNATE METHOD APPROVED BY ENGINEER.

LINE FENCE:

1. ALL T–POSTS SHALL NOT EXCEED 12 FEET OF SPACING.

2. STEEL T–POSTS SHALL BE HEAVY DUTY WEIGHT (1.33#), CERTIFIED ASTM–A702, GREEN WITH WHITE TOP, AND MINIMUM OF 6 FEET IN LENGTH. ALL POSTS SHALL BE DRIVEN TO A MINIMUM DEPTH OF 18 INCHES.

3. WIRE CLAMPS TO ATTACH BARB WIRE TO STEEL POSTS SHALL BE 11 GA. GALVANIZED WIRE.

HOLD DOWN:

4. INSTALL HOLD DOWNS AS NECESSARY TO MAINTAIN WIRE TO GROUND SPACING PER LINE FENCE DETAIL.

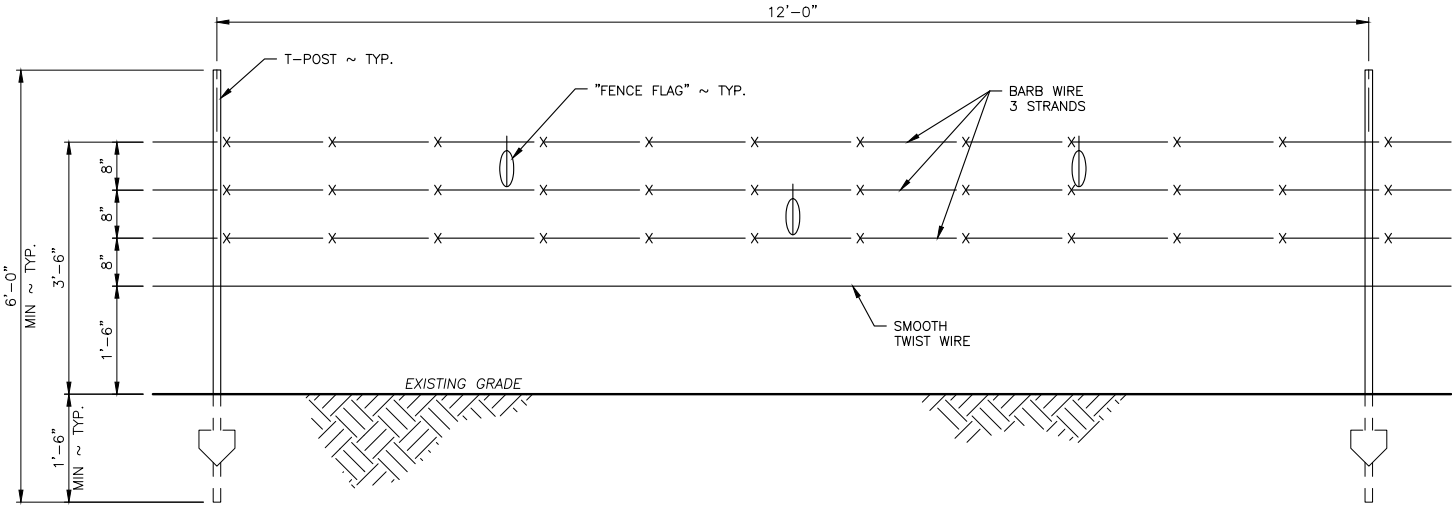

LINE FENCE
SCALE: 3/8" = 1'–0"

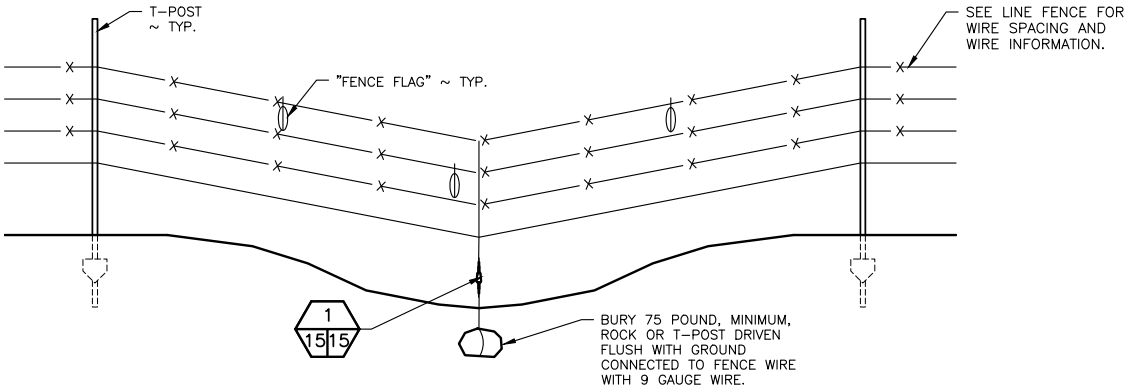

HOLD DOWN
NOT TO SCALE

REFERENCE NUMBER:
APPLICANT NAME:
WASHINGTON DEPT. of FISH & WILDLIFE
PROPOSED PROJECT:
GRAZING PLAN IMPROVEMENTS
LOCATION: TEANAWAY COMMUNITY FOREST
SHEET 15 OF 23 DATE: 06/01/2020

ENG. PROJECT NO. KS:R199:2019–1

DRAWN BY: N. BRUTZMAN

CORNER OR STRETCH BRACE:

1. BRACE POSTS SHALL BE AT LEAST 7 FEET LONG 3 INCHES X 2 3/8 INCHES IN DIAMETER, POSTS SHALL BE BURIED A MINIMUM DEPTH OF 33 INCHES.
2. HEAVY DUTY BRACE BAND SHALL BE FIXED IN PLACE WITH ONE 0.27 CALIBER POWER ACTUATED NAIL OR 1/4 INCH SELF-TAPPING SCREW.
3. THE DISTANCE BETWEEN STRETCH BRACES SHALL NOT EXCEED THE DISTANCE OF 1320 FEET (1/4 MILE).
4. INSTALL STRETCH BRACES AT CHANGES OF GRADE OF 10 DEGREES (1.75 FEET OF RISE OR DROP ON 10 FEET OF RUN) OR MORE.
5. CHANGES IN ALIGNMENT OF 10 DEGREES OR MORE (1.75 FEET OF DIRECTION CHANGE IN 10 FEET OF RUN) SHALL BE CONSIDERED AS CORNERS, AND A CORNER BRACE STRUCTURE SHALL BE INSTALLED.

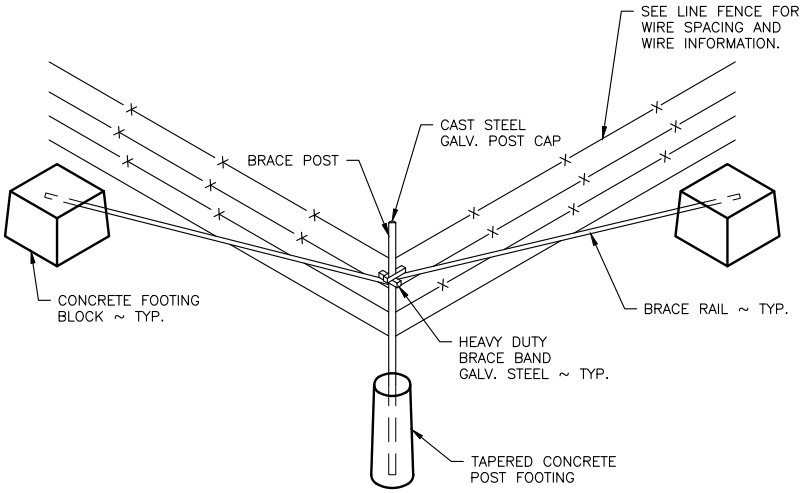

CORNER BRACE

NOT TO SCALE

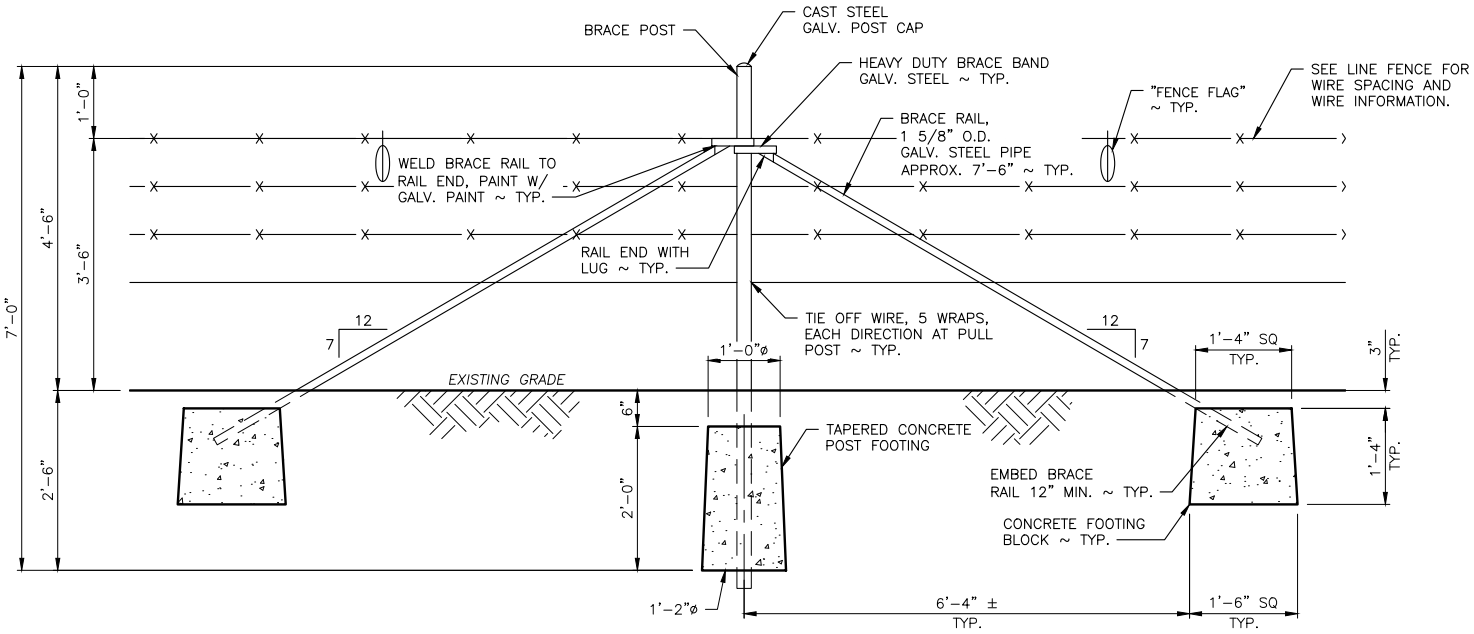

CORNER OR STRETCH BRACE

SCALE: 3/8" = 1'-0"

REFERENCE NUMBER:

APPLICANT NAME:

WASHINGTON DEPT. of FISH & WILDLIFE

PROPOSED PROJECT:

GRAZING PLAN IMPROVEMENTS

LOCATION: TEANAWAY COMMUNITY FOREST

SHEET 16 OF 23 DATE: 06/01/2020

ENG. PROJECT NO. KS:R199:2019-1

DRAWN BY: N. BRUTZMAN

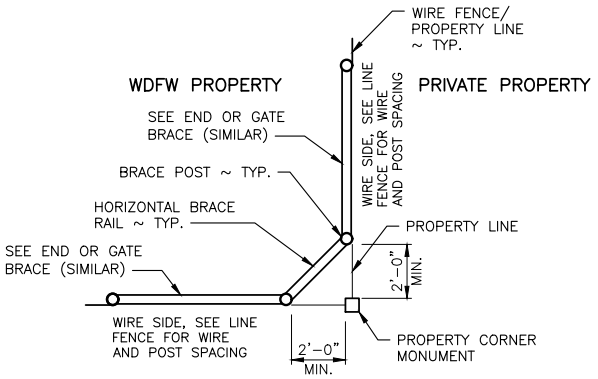

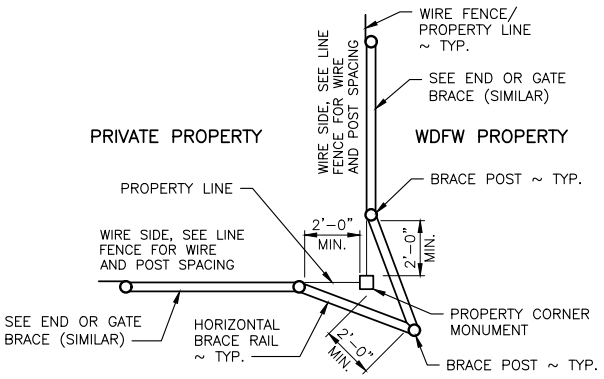

PROPERTY CORNER

NOT TO SCALE

END OR GATE BRACE:

1. POSITION OF WIRE ON END POST SHALL BE FIXED IN PLACE WITH ONE 0.27 CALIBER POWER ACTUATED NAIL OR 1/4 INCH SELF-TAPPING SCREW.
2. SEE CORNER OR STRETCH BRACE NOTES AND PANEL GATE DETAIL FOR MORE INFORMATION.

PROPERTY CORNER:

3. PROPERTY CORNER STRUCTURE CONSTRUCTION METHODS SIMILAR TO CORNER OR STRETCH BRACE.
4. DURING INSTALLATION OF POSTS, INSURE THAT THE PROPERTY CORNER MONUMENT IS NOT DAMAGED, MOVED, OR DISTURBED IN ANY WAY.

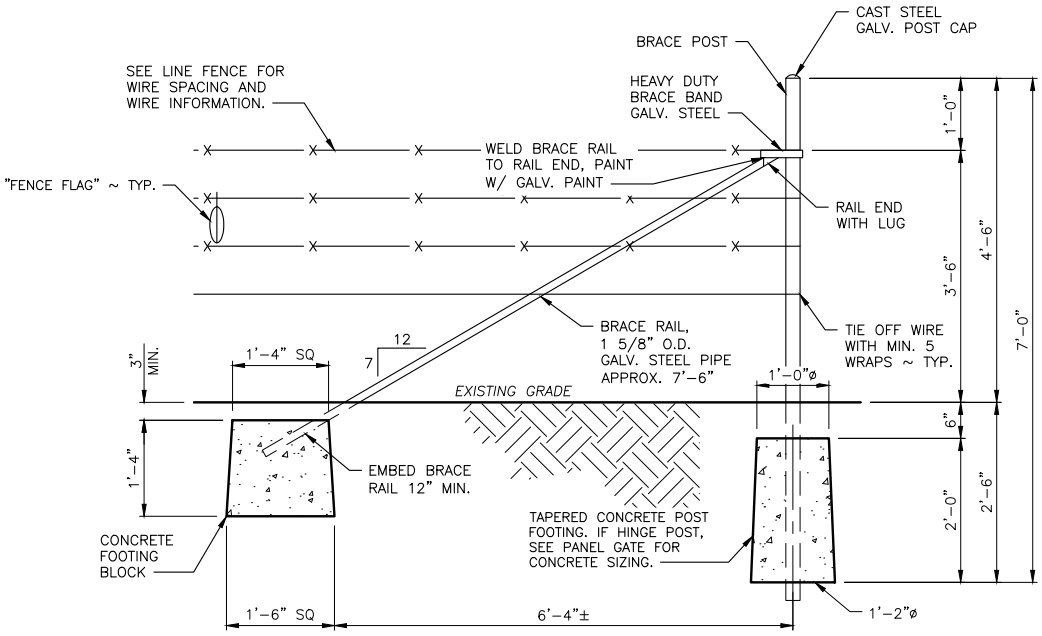

END OR GATE BRACE

SCALE: 3/8" = 1'-0"

REFERENCE NUMBER:

APPLICANT NAME:

WASHINGTON DEPT. of FISH & WILDLIFE

PROPOSED PROJECT:

GRAZING PLAN IMPROVEMENTS

LOCATION: TEANAWAY COMMUNITY FOREST

SHEET 17 OF 23 DATE: 06/01/2020

ENG. PROJECT NO. KS:R199:2019-1

DRAWN BY: N. BRUTZMAN

NOTES:

DROP GATE:

1. GATE SHALL HAVE THREE VERTICAL WOOD 48 X 2 X 4 PRESSURE TREATED STAYS AT 1/4 POINTS ALONG GATE. THE DROP POSTS LOCATED AT EACH END SHALL BE 3 TO 4 INCHES IN DIAMETER WOOD POSTS CUT TO A LENGTH OF 4 FEET 4 INCHES. LOOP HINGES AND LOOP CLOSURES CONSTRUCTED OF BRACE WIRE AND LOOPED AROUND END BRACE POSTS TO FACILITATE CLOSURE OF THE GATE.

2. SPACING OF THE LONGITUDINAL WIRES SHALL BE THE SAME AS THE LINE FENCE.

PANEL GATE:

3. HINGE POSTS SHALL BE AT LEAST 7 FEET 3 INCHES LONG X 4 INCHES DIAMETER AND BURIED TO A MINIMUM DEPTH OF 33 INCHES.

4. PANEL GATE MANUFACTURER, TYPE, AND SIZE AS SPECIFIED IN SPECIFICATION. INSTALLED PER MANUFACTURES SPECIFICATION.

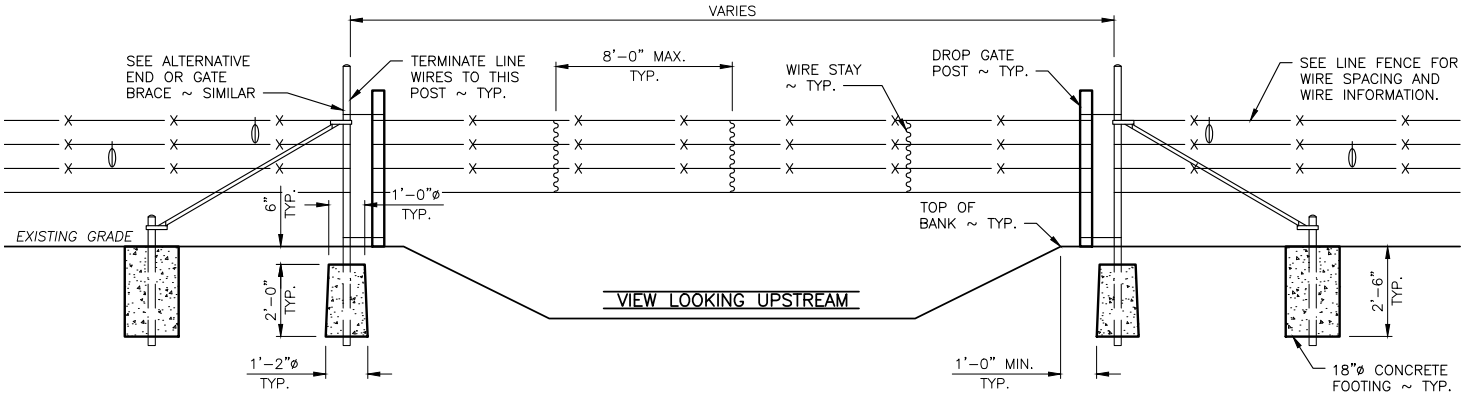

DRAINAGE/STREAM CROSSING
NOT TO SCALE

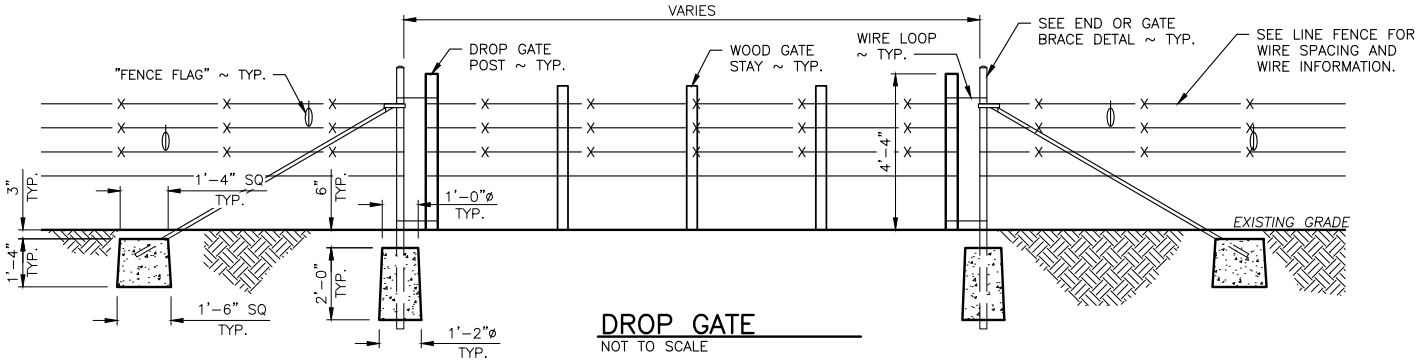

DROP GATE
NOT TO SCALE

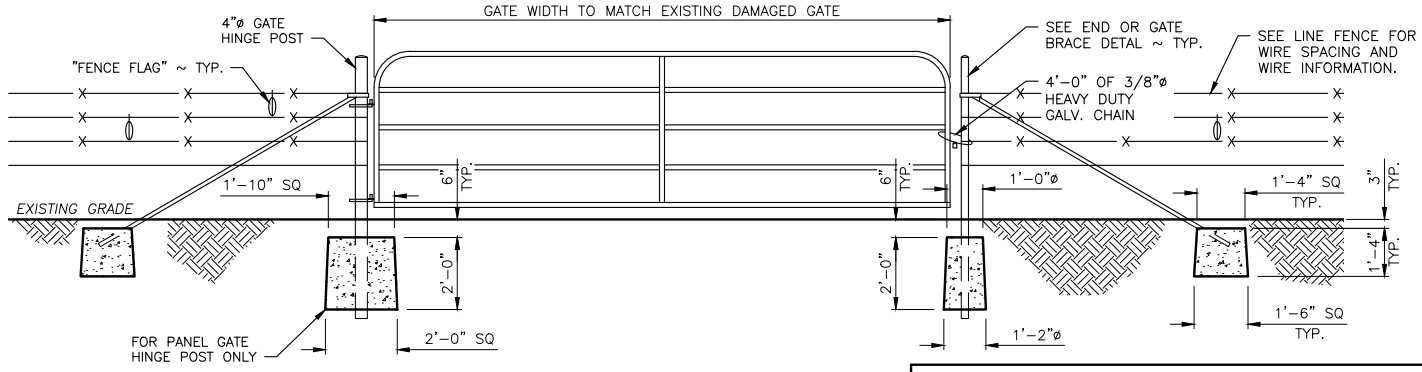

PANEL GATE
NOT TO SCALE

REFERENCE NUMBER:
APPLICANT NAME:
WASHINGTON DEPT. of FISH & WILDLIFE
PROPOSED PROJECT:
GRAZING PLAN IMPROVEMENTS
LOCATION: TEANAWAY COMMUNITY FOREST
SHEET 18 OF 23 DATE: 06/01/2020

ENG. PROJECT NO. KS:R199:2019-1

DRAWN BY: N. BRUTZMAN

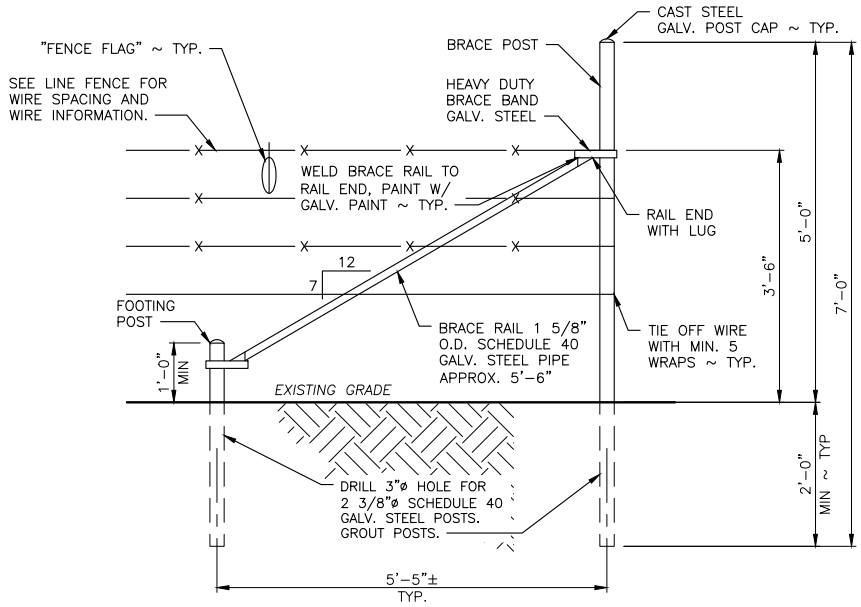

ALTERNATE END OR GATE BRACE

SCALE: 3/8" = 1'-0"

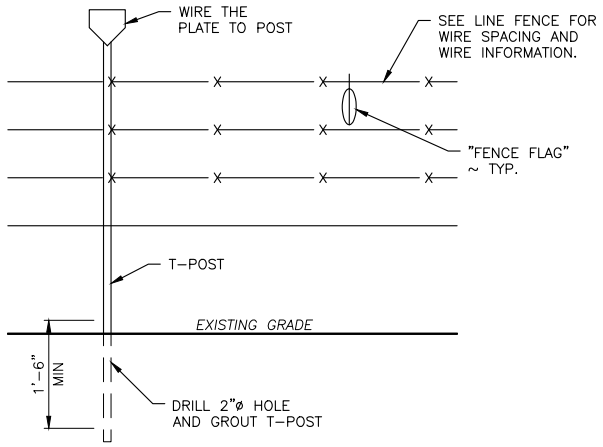

ALTERNATE T-POST INSTALLATION

SCALE: 3/8" = 1'-0"

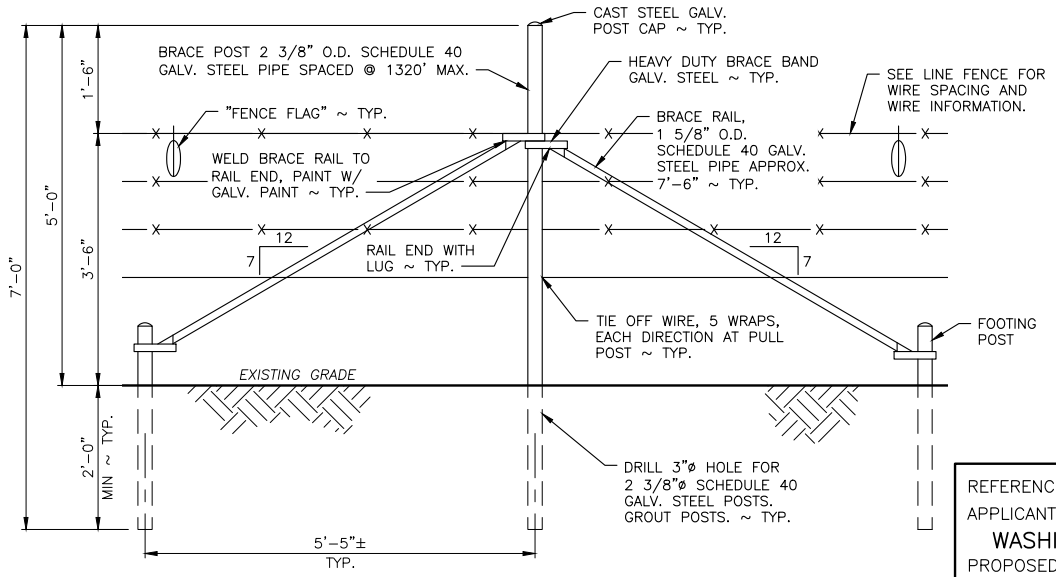

ALTERNATIVE CORNER OR STRETCH BRACE

SCALE: 3/8" = 1'-0"

NOTES FOR ALTERNATE METHODS:

A. ALTERNATE METHODS MAY BE USED WITH ENGINEER'S APPROVAL.

B. IF THE POST HOLE CANNOT BE DUG CONVENTIONALLY DUE TO BEDROCK, A 3 INCHES DIAMETER HOLE FOR THE BRACE POST SHALL BE DRILLED TO A DEPTH OF AT LEAST 24 INCHES INTO THE ROCK AND THE POST BE GROUTED WITH A THIN FLOWABLE GROUT (OR LARGER TO ACCOMMODATE HINGE POST). AN IDENTICAL HOLE FOR A FOOTING POST TO RECEIVE THE LOWER END OF THE BRACE RAIL SHALL ALSO BE DRILLED, AND 2 3/8 INCHES DIAMETER POST GROUTED IN. ALL VERTICAL METAL POSTS (BRACE AND FOOTING) SHALL HAVE A GALVANIZED METAL POST CAP.

ALTERNATE T-POST INSTALLATION:

1. IF THE LINE POST DESIGN DEPTH CANNOT BE OBTAINED BY CONVENTIONAL DRIVING DUE TO EXISTING SOIL/ROCK CONDITIONS, THE POST HOLE SHALL BE DRILLED AND GROUTED WITH A THIN FLOWABLE GROUT.

ALTERNATE CORNER OR STRETCH BRACE:

2. BRACE POSTS SHALL BE AT LEAST 7 FEET LONG X 2 3/8 INCHES IN DIAMETER, POSTS SHALL BE BURIED A MINIMUM DEPTH OF 24 INCHES.

3. HEAVY DUTY BRACE BAND SHALL BE FIXED IN PLACE WITH ONE 0.27 CALIBER POWER ACTUATED NAIL OR 1/4 INCH SELF-TAPPING SCREW.

4. THE DISTANCE BETWEEN STRETCH BRACES SHALL NOT EXCEED THE DISTANCE OF 1320 FEET (1/4 MILE).

5. INSTALL STRETCH BRACES AT CHANGES OF GRADE OF 10 DEGREES (1.75 FEET OF RISE OR DROP ON 10 FEET OF RUN) OR MORE.

6. CHANGES IN ALIGNMENT OF 10 DEGREES OR MORE (1.75 FEET OF DIRECTION CHANGE IN 10 FEET OF RUN) SHALL BE CONSIDERED AS CORNERS, AND A CORNER BRACE STRUCTURE SHALL BE INSTALLED.

ALTERNATE END OR GATE BRACE:

7. POSITION OF WIRE ON END POST SHALL BE FIXED IN PLACE WITH ONE 0.27 CALIBER POWER ACTUATED NAIL OR 1/4 INCH SELF-TAPPING SCREW.

8. SEE ALTERNATIVE CORNER OR STRETCH BRACE NOTES AND PANEL GATE DETAIL FOR MORE INFORMATION.

9. GATE HINGE POST SHALL BE 4 INCH DIAMETER SCHEDULE 40 GALVANIZED STEEL PIPE.

REFERENCE NUMBER:

APPLICANT NAME:

WASHINGTON DEPT. of FISH & WILDLIFE

PROPOSED PROJECT:

GRAZING PLAN IMPROVEMENTS

LOCATION: TEANAWAY COMMUNITY FOREST

SHEET 19 OF 23 DATE: 06/01/2020

ENG. PROJECT NO. KS:R199:2019-1

DRAWN BY: N. BRUTZMAN

H–BRACE:

1. BRACE POSTS SHALL BE AT LEAST 7 FEET 3 INCHES LONG X 2 3/8 INCHES IN DIAMETER, POSTS SHALL BE BURIED A MINIMUM DEPTH OF 33 INCHES.
2. HEAVY DUTY BRACE BAND SHALL BE FIXED IN PLACE WITH ONE 0.27 CALIBER POWER ACTUATED NAIL OR 1/4 INCH SELF–TAPPING SCREW.
3. THE DISTANCE BETWEEN H–BRACE SPACING SHALL NOT EXCEED THE DISTANCE OF 1,320 FEET (1/4 MILE).
4. INSTALL H–BRACES AT CHANGES OF GRADE OF 10 DEGREES (1.75 FEET OF RISE OR DROP ON 10 FEET OF RUN) OR MORE.
5. CHANGES IN ALIGNMENT OF 10 DEGREES OR MORE (1.75 FEET OF DIRECTION CHANGE IN 10 FEET OF RUN) SHALL BE CONSIDERED AS CORNERS, AND A CORNER BRACE STRUCTURE SHALL BE INSTALLED.

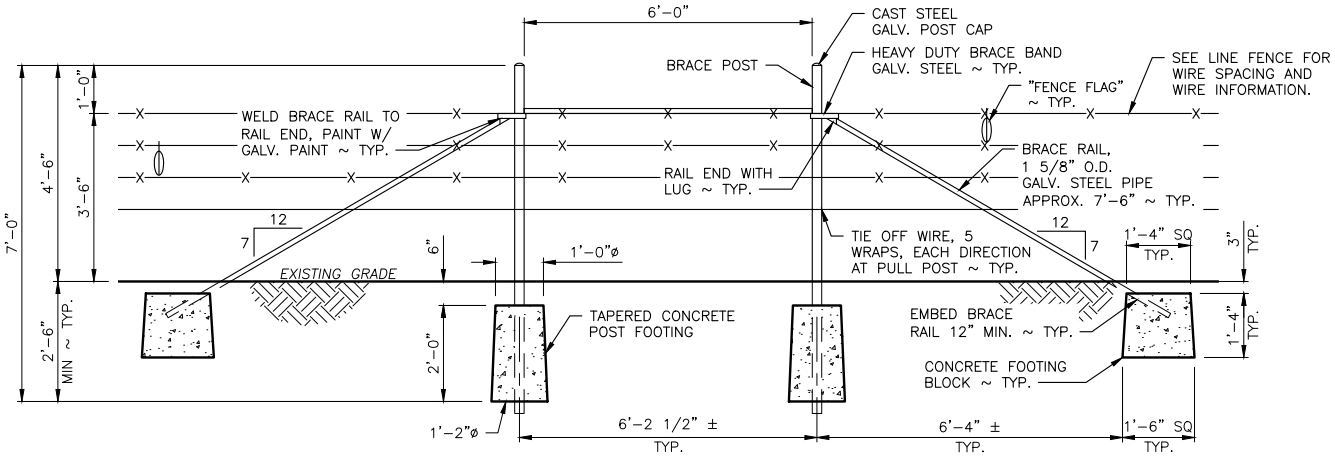

H–BRACE

SCALE: 1/4" = 1'–0"

REFERENCE NUMBER:

APPLICANT NAME:

WASHINGTON DEPT. of FISH & WILDLIFE

PROPOSED PROJECT:

GRAZING PLAN IMPROVEMENTS

LOCATION: TEANAWAY COMMUNITY FOREST

ENG. PROJECT NO. KS:R199:2019–1

DRAWN BY: N. BRUTZMAN

SHEET 20 OF 23 DATE: 06/01/2020

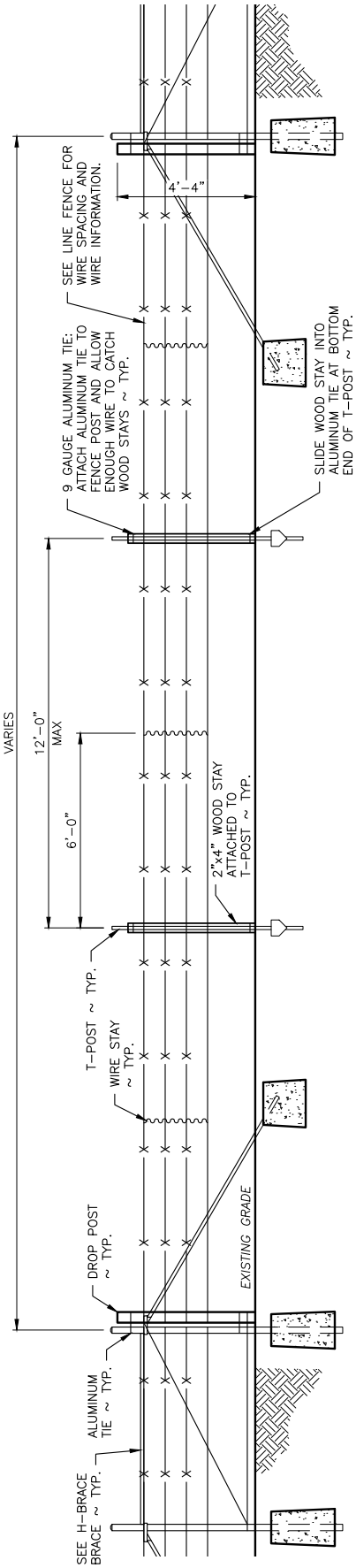

DROP FENCE
SCALE: 3/16" = 1'-0"

DROP FENCE:

1. DROP FENCE SHALL HAVE VERTICAL WIRE STAYS EVENLY SPACED BETWEEN DROP AND T-POSTS.
2. DROP FENCE SHALL HAVE VERTICAL WOOD 48 x 2 x 4 PRESSURE TREATED STAYS ATTACHED TO EACH T-POST WITH 9 GAUGE ALUMINUM WIRE LOOPS. SECURELY ATTACH FENCE WIRES TO WOODEN STAYS WITH GALVANIZED STAPLES.
3. COORDINATE WITH OWNER REPRESENTATIVE TO ENSURE DROP SECTION FUNCTIONS AS DESIRED.

REFERENCE NUMBER:
APPLICANT NAME:
WASHINGTON DEPT. of FISH & WILDLIFE
PROPOSED PROJECT:
GRAZING PLAN IMPROVEMENTS
LOCATION: TEANAWAY COMMUNITY FOREST
SHEET 21 OF 23 DATE: 06/01/2020

ENG. PROJECT NO. KS:R199:2019-1
DRAWN BY: N. BRUTZMAN

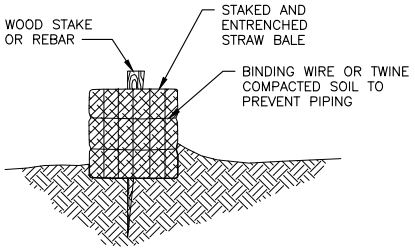

STRAW BALE 2 22 22
NOT TO SCALE

DEWATERING NOTES:

1. ALL WORK SHALL BE IN ACCORDANCE WITH HPA.
2. DURING CONSTRUCTION (IF WATER IS PRESENT) STREAM FLOW SHALL BE DIVERTED THROUGH BYPASS PIPE.
3. PLACE BAGS FILLED WITH PEA GRAVEL TO SEAL BYPASS INLET AND OUTLET.
4. FISH REMOVAL SHALL OCCUR BEFORE WORK AREA IS DEWATERED.
5. BYPASS SHALL BE APPROVED BY ENGINEER PRIOR TO EXCAVATION.
6. EXCAVATE WORK SITE.
7. PLACE NEW BED MATERIAL MIX AND REMOVE BYPASS PIPE.
8. COVER ALL EXPOSED SOIL WITH STRAW MULCH AND GRASS SEED.
9. REMOVE SANDBAGS AND STRAW BALES BY HAND.

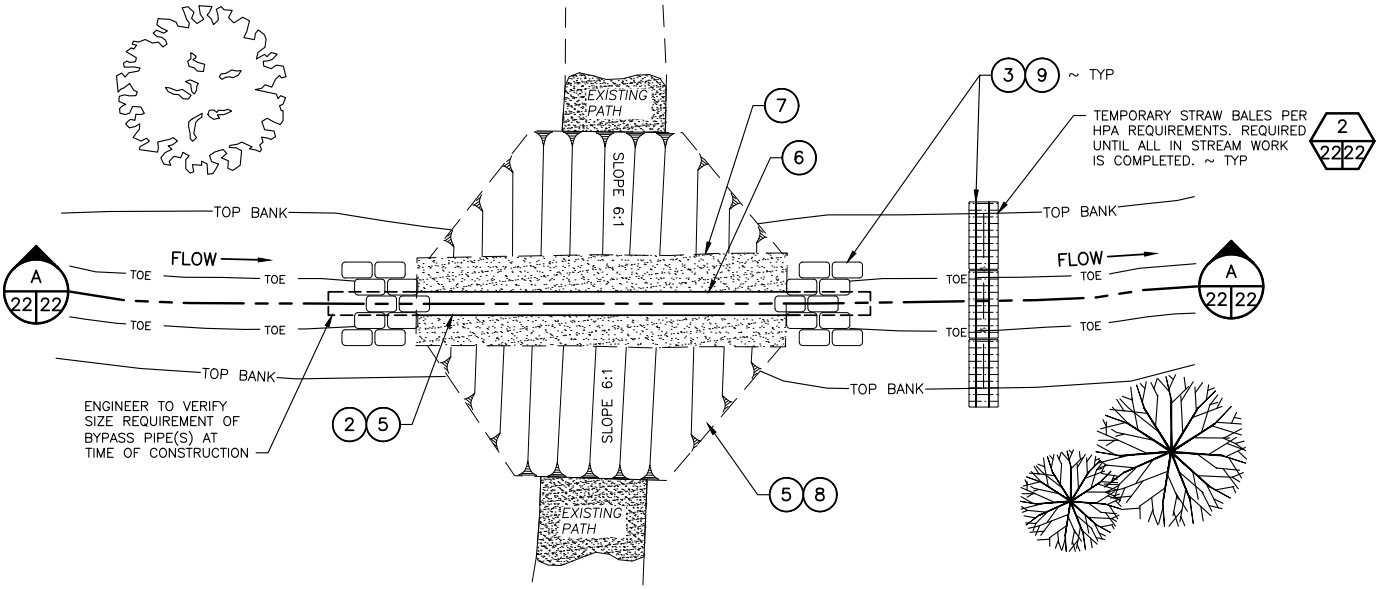

PLAN

DEWATERING PLAN
NOT TO SCALE

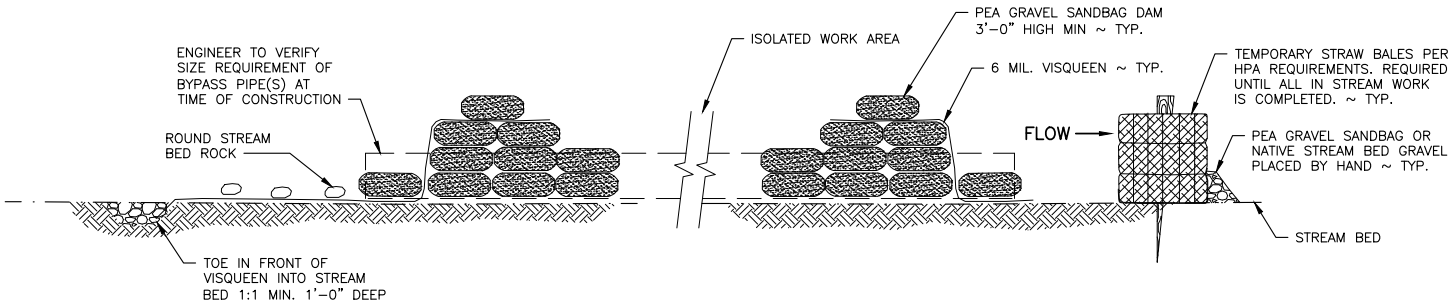

DEWATERING SECTION A 22 22
NOT TO SCALE

REFERENCE NUMBER:
APPLICANT NAME:
WASHINGTON DEPT. of FISH & WILDLIFE
PROPOSED PROJECT:
GRAZING PLAN IMPROVEMENTS
LOCATION: TEANAWAY COMMUNITY FOREST
SHEET 22 OF 23 DATE: 06/01/2020

ENG. PROJECT NO. KS:R199:2019-1 DRAWN BY: N. BRUTZMAN

CATTLE CROSSING NOTE:

1. ENSURE THAT IN-STREAM SLOPE IS MAINTAINED ACROSS THE WIDTH OF THE CATTLE CROSSING.

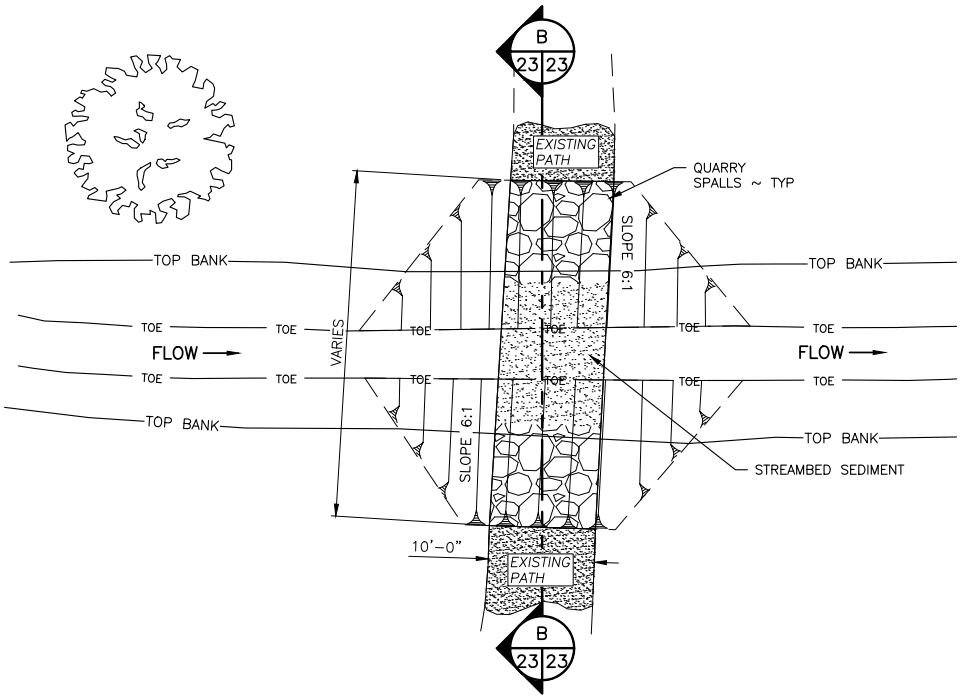

PLAN

CATTLE CROSSING PLAN

NOT TO SCALE

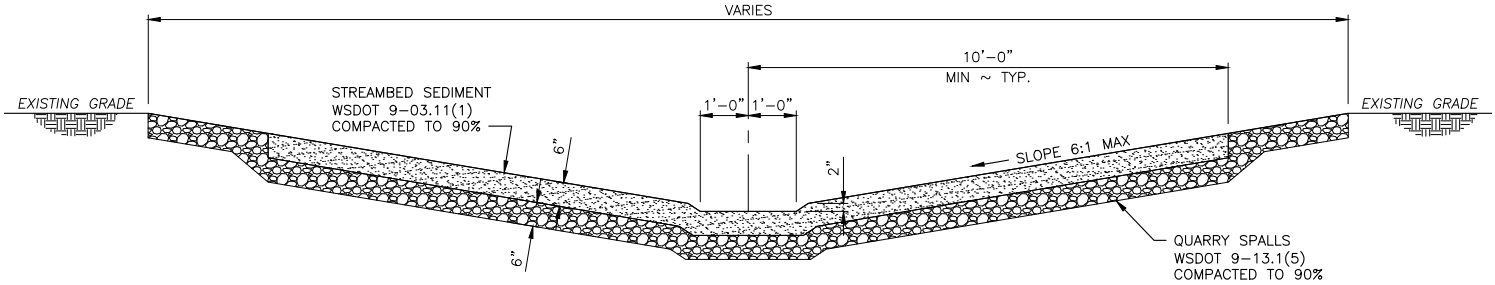

CATTLE CROSSING

NOT TO SCALE

B
23 23

REFERENCE NUMBER:

APPLICANT NAME:

WASHINGTON DEPT. of FISH & WILDLIFE

PROPOSED PROJECT:

GRAZING PLAN IMPROVEMENTS

LOCATION: TEANAWAY COMMUNITY FOREST

SHEET 23 OF 23 DATE: 06/01/2020

ENG. PROJECT NO. KS:R199:2019-1

DRAWN BY: N. BRUTZMAN