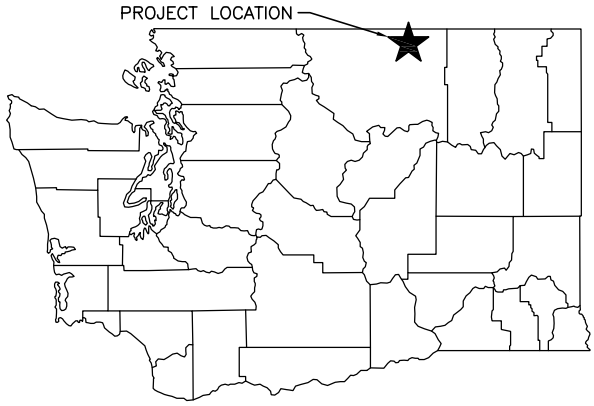

STATE MAP
NOT TO SCALE

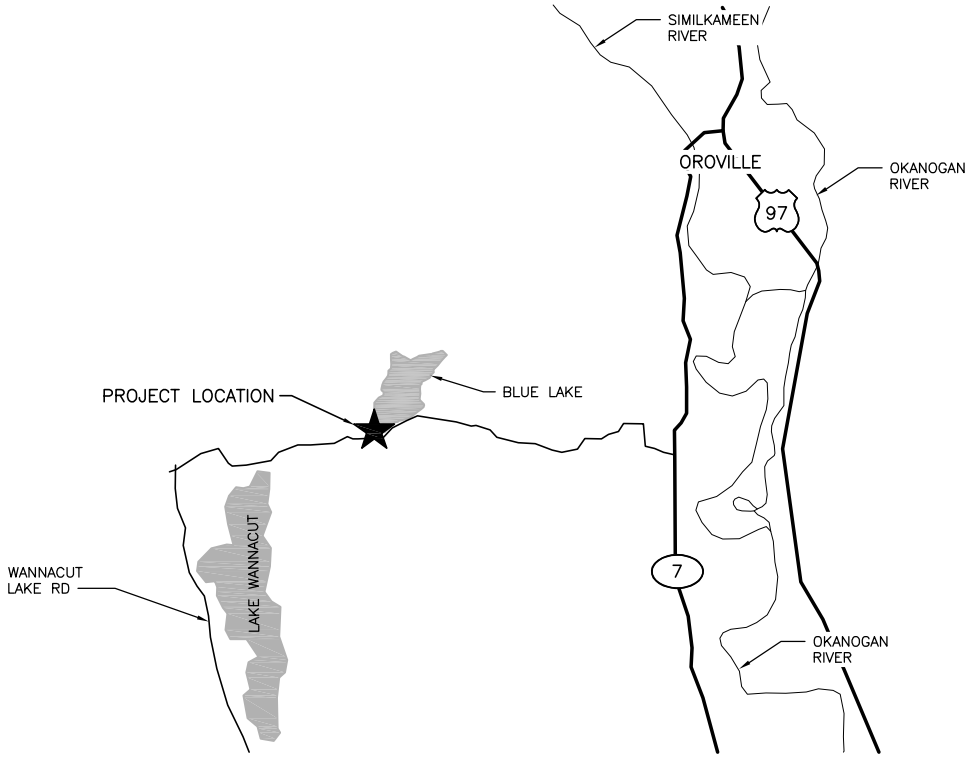

DIRECTIONS:

TAKE HIGHWAY 7 SOUTH OUT OF OROVILLE. FOLLOW HWY 7 TO GOLDEN RD. AFTER YOU TURN RIGHT ONTO GOLDEN RD, FOLLOW IT UNTIL YOU REACH BLUE LAKE ON YOUR RIGHT. THE PROJECT SITE WITLL BE ON YOUR RIGHT 2.4 MILES IN FROM HIGHWAY 7.

PROPERTY INFORMATION:

ADDRESS:	BLUE LAKE ACCESS BLUE LAKE RD OROVILLE, WA 98844
COUNTY:	OKANOGAN COUNTY
PARCEL #:	047–392601001
TOWNSHIP:	39 N
RANGE:	26 E
SECTION:	01

FOR WDFW REVIEW ONLY

ENG. PROJECT NO. ST:A325:2018–1

PORTION OF: S01, T39N, R26E, WM

DRAWN BY: S. ASHLER

REFERENCE NUMBER:

APPLICANT:
WASHINGTON DEPT. of FISH & WILDLIFE
600 CAPITOL WAY N.
OLYMPIA, WA 98501–1091

ADJACENT PROPERTY OWNER:
1.
2

PROJECT LOCATION (ADDRESS):
BLUE LAKE ACCESS
GOLDEN RD,
OROVILLE, WA 98844

LAT/LONG: 48.902138, –119.497060
DATUM: NAVD 88
SHEET 1 OF 12 DATE: 07/23/2020

PROPOSED PROJECT:
BLUE LAKE (WANNACUT) ACCESS
ACCESS REDEVELOPMENT

IN: BLUE LAKE
NEAR/AT: OROVILLE
COUNTY: OKANOGAN
STATE: WA

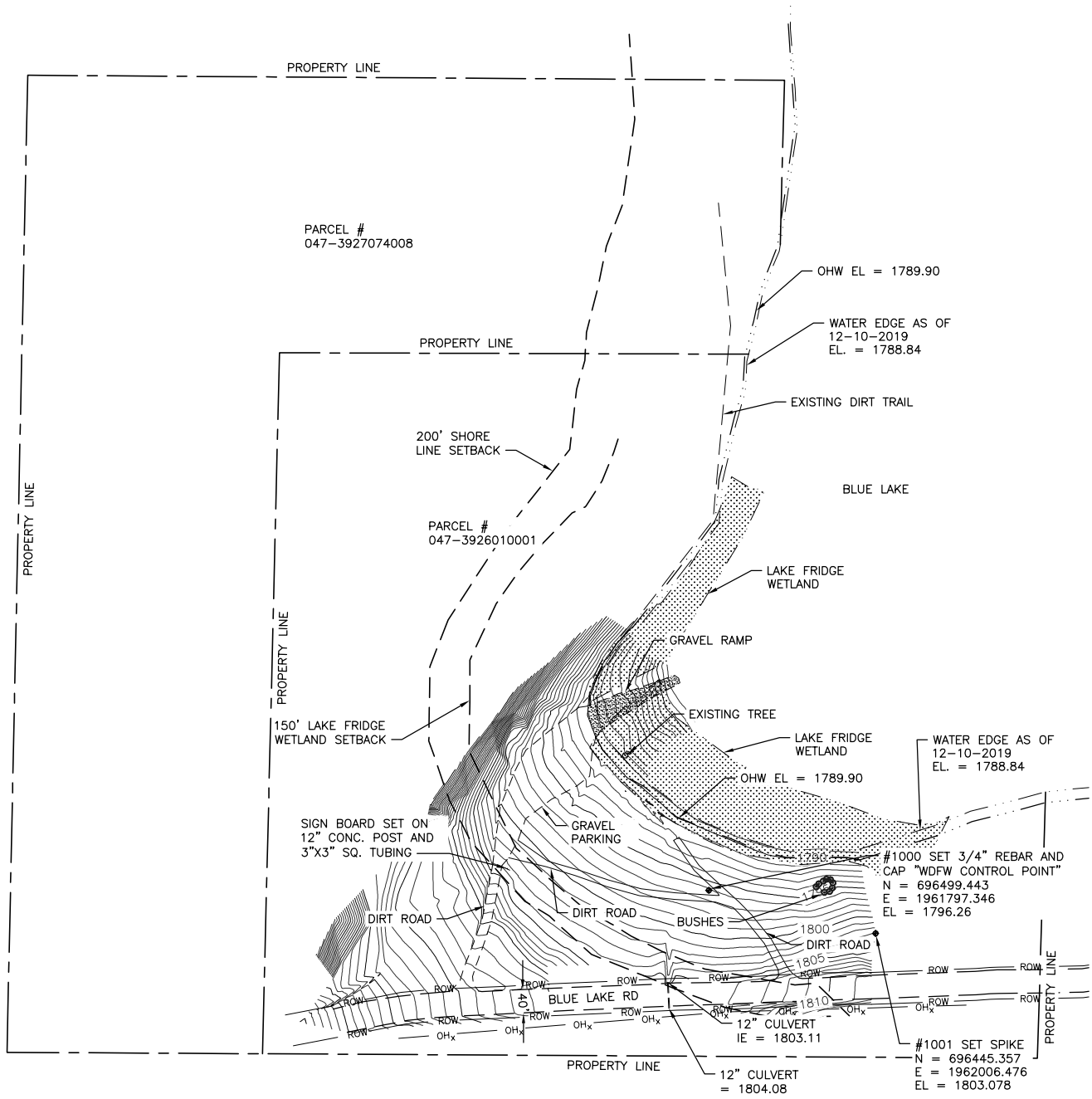

EXISTING SITE

SCALE: 1" = 200'

REFERENCE NUMBER:

APPLICANT NAME:

WASHINGTON DEPT. of FISH & WILDLIFE

PROPOSED PROJECT:

ACCESS REDEVELOPMENT

LOCATION: BLUE LAKE (WANNACUT)

SHEET 2 OF 12 DATE: 07/23/2020

ENG. PROJECT NO. ON:A325:2019-1

DRAWN BY: S. ASHLER

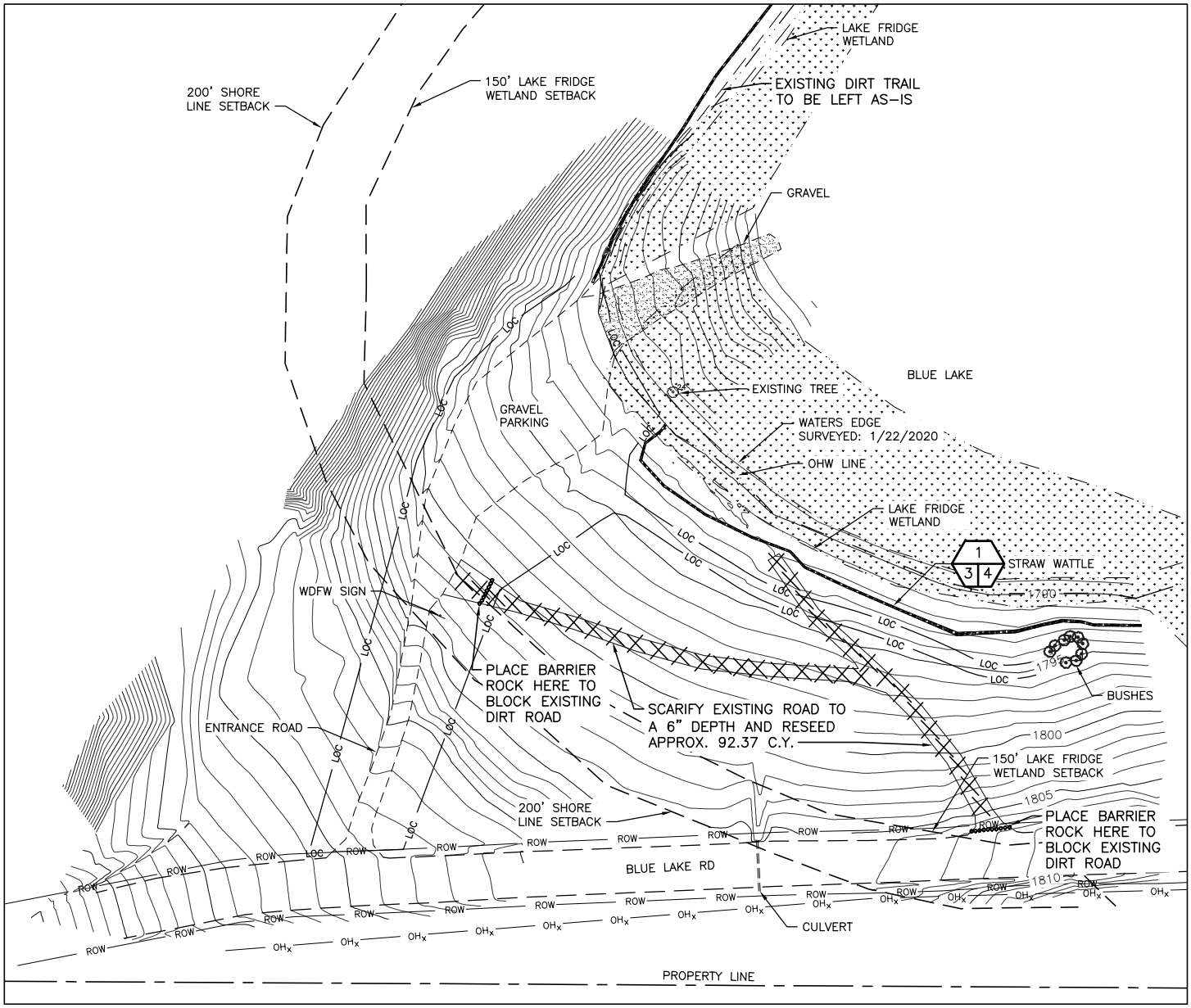

EROSION AND DEMOLITION SITE PLAN

SCALE: 1" = 100'

LEGEND

LIMITS OF CONSTRUCTION	LOC
OVER HEAD POWER	OH_x OH_x OH_x
RIGHT OF WAY	ROW ROW

REFERENCE NUMBER:

APPLICANT NAME:

WASHINGTON DEPT. of FISH & WILDLIFE

PROPOSED PROJECT:

ACCESS REDEVELOPMENT

LOCATION: BLUE LAKE (WANNACUT)

SHEET 3 OF 12 DATE: 07/23/2020

ENG. PROJECT NO. ON:A325:2019-1

DRAWN BY: S. ASHLER

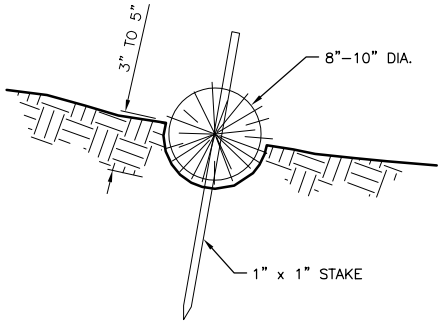

STRAW WATTLE DETAIL

NOT TO SCALE

1 / 3 4

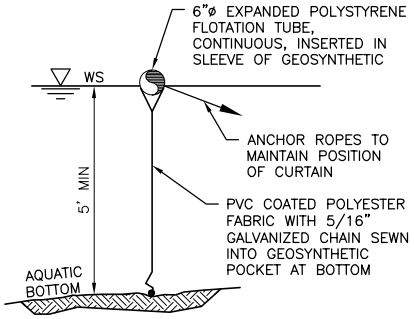

TURBIDITY CURTAIN

NOT TO SCALE

2 / 4 5

NOTES:

1. FABRIC IS 22 OZ/YD²

CONSTRUCTION SPECIFICATIONS:

1. PREPARE THE SLOPE BEFORE THE WATTLING PROCEDURE IS STARTED.
2. SHALLOW GULLIES SHOULD BE SMOOTHED AS WORK PROGRESSES.
3. DIG SMALL TRENCHES ACROSS THE SLOPE ON CONTOUR, TO PLACE ROLLS IN. THE TRENCH SHOULD BE DEEP ENOUGH TO ACCOMMODATE HALF THE THICKNESS OF THE ROLL. WHEN THE SOIL IS LOOSE AND UNCOMPACTED, THE TRENCH SHOULD BE DEEP ENOUGH TO BURY THE ROLL 2/3 OF ITS THICKNESS BECAUSE THE GROUND WILL SETTLE.
4. INSTALL PERPENDICULAR TO WATER MOVEMENT, PARALLEL TO THE SLOPE CONTOUR.
5. CONSTRUCT TRENCHES AND INSTALL ROLLS FROM THE BOTTOM OF THE SLOPE AND WORK UP.
6. CONSTRUCT TRENCHES AT CONTOUR INTERVALS OF 3–12 FEET APART DEPENDING ON STEEPNESS OF SLOPE. THE STEEPER THE SLOPE, THE CLOSER TOGETHER THE TRENCHES. 1:1=10' 2:1=20' 3:1=30' 4:1=40'
7. LAY THE ROLL ALONG THE TRENCHES FITTING IT SNUGLY AGAINST THE SOIL. MAKE SURE NO GAPS EXIST BETWEEN THE SOIL AND THE STRAW WATTLE.
8. USE A STRAIGHT BAR TO DRIVE HOLES THROUGH THE WATTLE AND INTO THE SOIL FOR THE WILLOW OR WOODEN STAKES.
9. DRIVE THE STAKE THROUGH PREPARED HOLE INTO SOIL. LEAVE ONLY 1 OR 2 INCHES OF STAKE EXPOSED ABOVE ROLL.
10. IF USING WILLOW STAKES REFER TO LIVE STAKING BEST MANAGEMENT PRACTICES.
11. INSTALL STAKES AT LEAST EVERY 4 FEET APART THROUGH THE WATTLE. ADDITIONAL STAKES MAY BE DRIVEN ON THE DOWNSLOPE SIDE OF THE TRENCHES ON HIGHLY EROSIVE OR VERY STEEP SLOPES.
12. INSPECT THE STRAW ROLLS AND THE SLOPES AFTER SIGNIFICANT STORMS. MAKE SURE THE ROLLS ARE IN CONTACT WITH THE SOIL.
13. REPAIR ANY RILLS OR GULLYS PROMPTLY.
14. RESEED OR REPLANT VEGETATION IF NECESSARY UNTIL THE SLOPE IS STABILIZED.

REFERENCE NUMBER:

APPLICANT NAME:

WASHINGTON DEPT. of FISH & WILDLIFE

PROPOSED PROJECT:

ACCESS REDEVELOPMENT

LOCATION: BLUE LAKE (WANNACUT)

SHEET 4 OF 12 DATE: 07/23/2020

ENG. PROJECT NO. ON:A325:2019–1

DRAWN BY: S. ASHLER

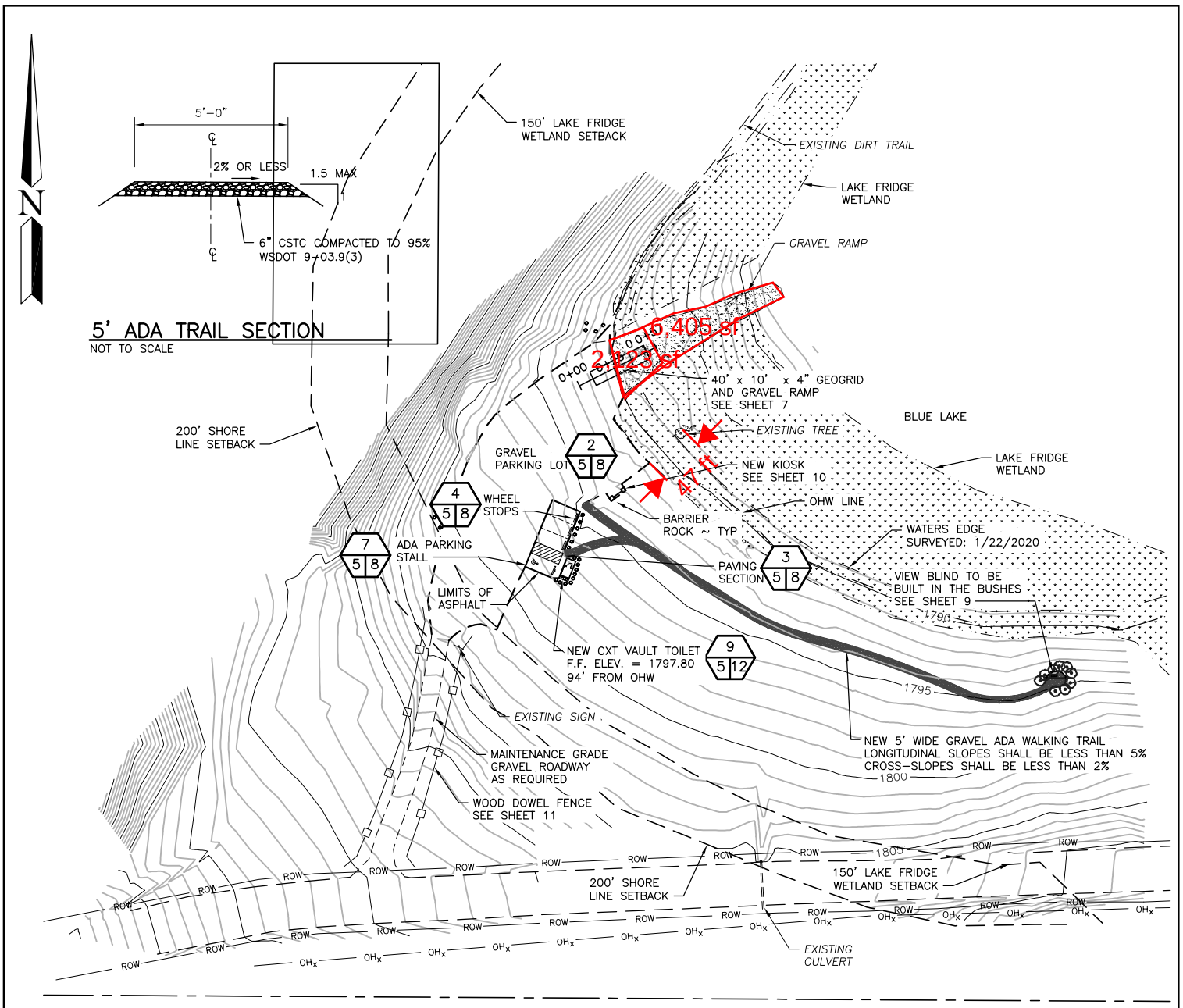

PROPOSED SITE PLAN

SCALE: 1" = 100'

CUT & FILL CY DATA				
MATERIAL	ABOVE OHW		BELOW OHW	
	CUT	FILL	CUT	FILL
EXISTING GRAVEL/SOILS	92.37	0.00	0.00	0.00
PARKING LOT/RAMP GRAVEL	0.00	174.00	0.00	26.00
HOT MIX ASPHALT	0.00	9.50	0.00	0.00
BARRIER ROCKS	0.00	20.96	0.00	0.00
5' ADA TRAIL GRAVEL	0.00	24.54	0.00	0.00
TOTAL	92.37	229.00	0.00	26.00

OVER ALL CUT & FILL TABLE		
	ABOVE OHW	BELOW OHW
CUT	92.71 CY	0 CY
FILL	229.00 CY	26 CY
NET.	+ 136.29 CY	+ 26 CY

REFERENCE NUMBER:

APPLICANT NAME:

WASHINGTON DEPT. of FISH & WILDLIFE

PROPOSED PROJECT:

ACCESS REDEVELOPMENT

LOCATION: BLUE LAKE (WANNACUT)

SHEET 5 OF 12 DATE: 07/23/2020

ENG. PROJECT NO. ON:A325:2019-1

DRAWN BY: S. ASHLER

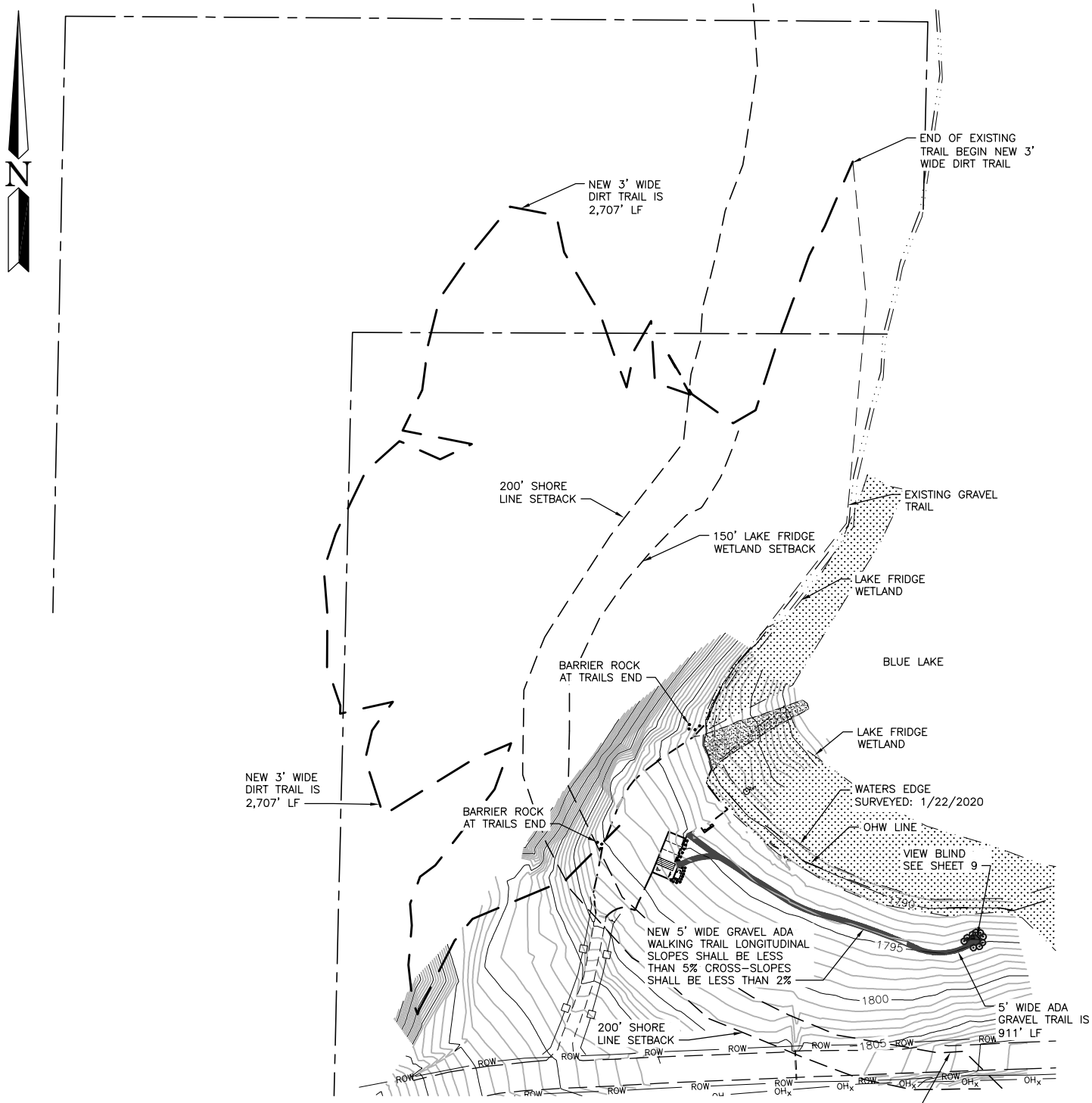

PROPOSED TRAIL PLAN

SCALE: 1" = 160'

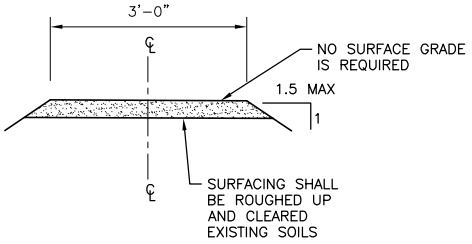

3' DIRT TRAIL SECTION

NOT TO SCALE

REFERENCE NUMBER:

APPLICANT NAME:

WASHINGTON DEPT. of FISH & WILDLIFE

PROPOSED PROJECT:

ACCESS REDEVELOPMENT

LOCATION: BLUE LAKE (WANNACUT)

SHEET 6 OF 12 DATE: 07/23/2020

ENG. PROJECT NO. ON:A325:2019-1

DRAWN BY: S. ASHLER

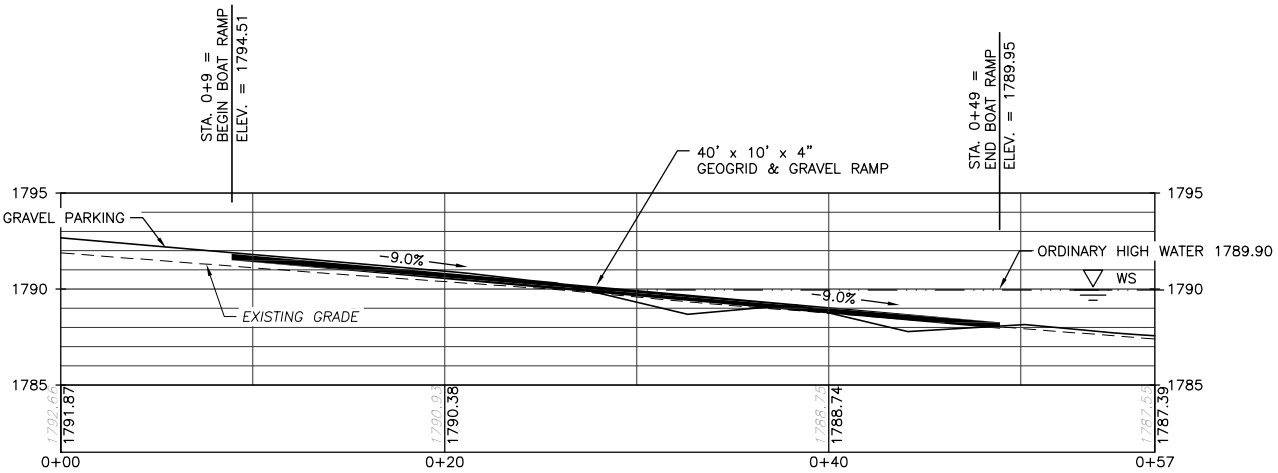

RAMP PROFILE

SCALE: 1" = 10'

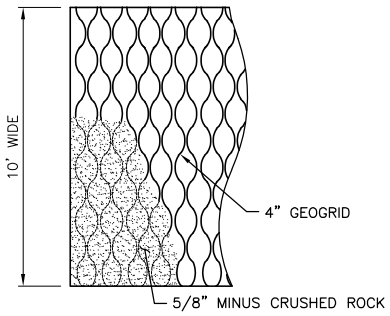

PLAN

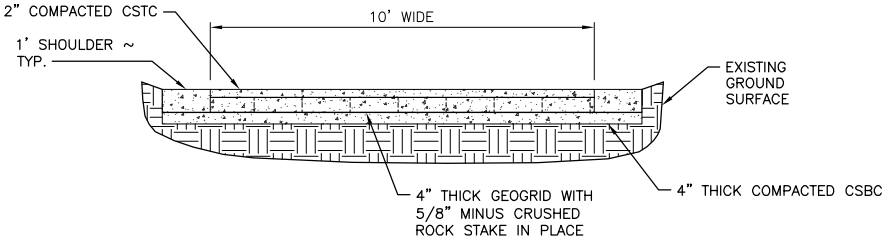

SECTION

GEOGRID & GRAVEL RAMP

NOT TO SCALE

REFERENCE NUMBER:

APPLICANT NAME:

WASHINGTON DEPT. of FISH & WILDLIFE

PROPOSED PROJECT:

ACCESS REDEVELOPMENT

LOCATION: BLUE LAKE (WANNACUT)

SHEET 7 OF 12 DATE: 07/23/2020

ENG. PROJECT NO. ON:A325:2019-1

DRAWN BY: S. ASHLER

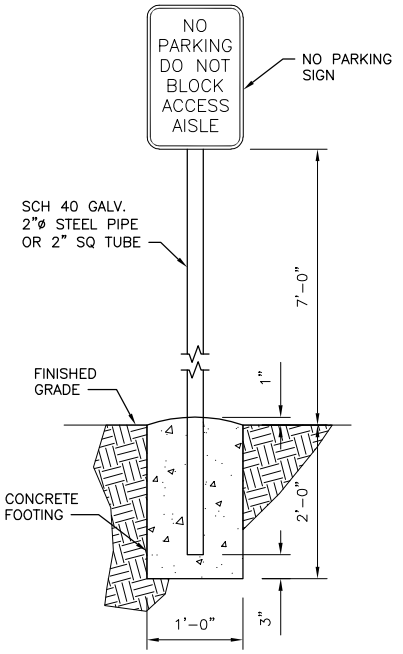

NO PARKING SIGN (6/8 8)

NOT TO SCALE

NOTE: USE TAMPER RESISTANT NUTS TO ATTACH SIGNS TO POST.

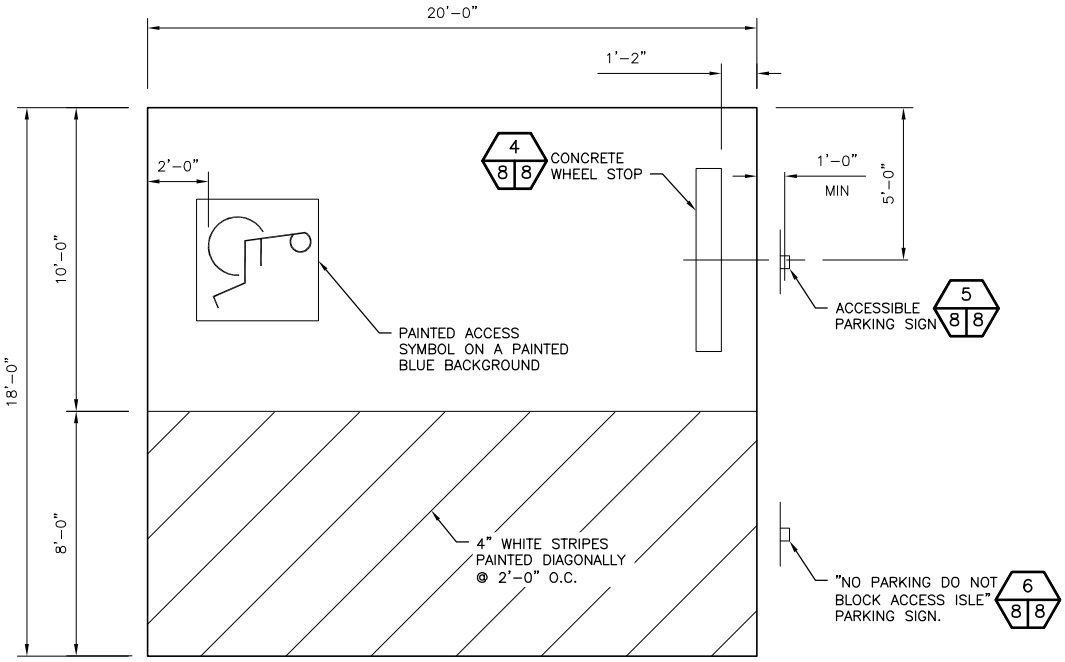

ACCESSIBLE PARKING AREA (7/5 8)

NOT TO SCALE

NOTE: 2% MAXIMUM SLOPE IN ALL DIRECTIONS.

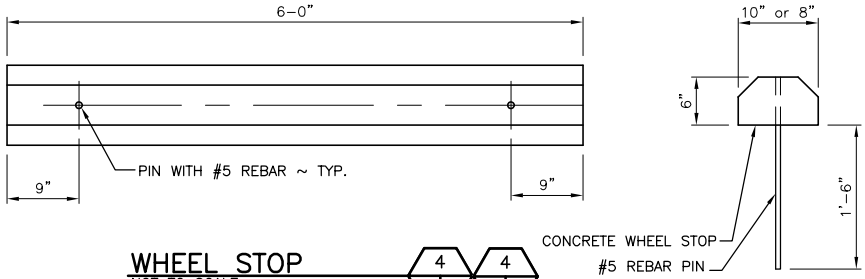

WHEEL STOP (4/5 8) (4/8 8)

NOT TO SCALE

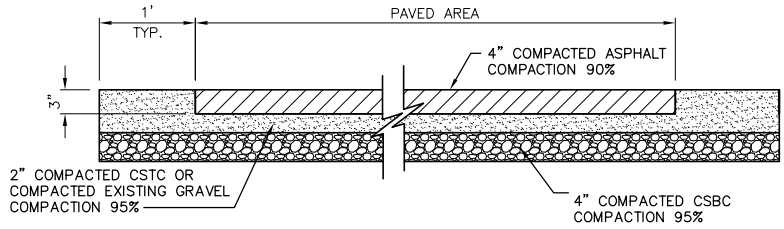

PAVEMENT SECTION (3/5 8)

NOT TO SCALE

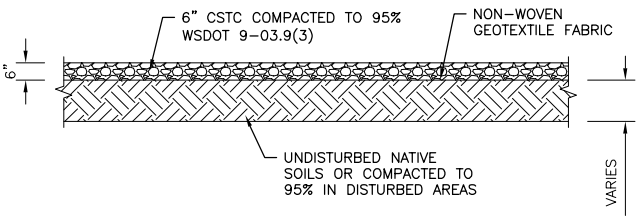

GRAVEL DETAIL (2/5 8)

NOT TO SCALE

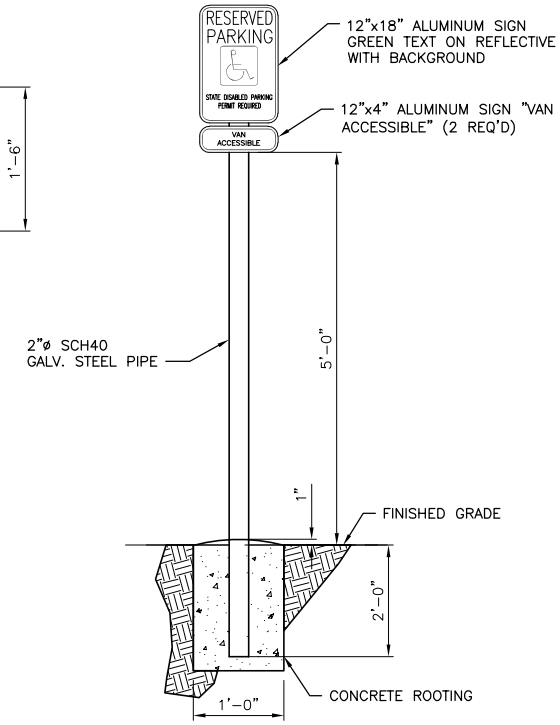

ACCESSIBLE PARKING SIGN (5/5 8)

NOT TO SCALE

REFERENCE NUMBER:

APPLICANT NAME:

WASHINGTON DEPT. of FISH & WILDLIFE

PROPOSED PROJECT:

ACCESS REDEVELOPMENT

LOCATION: BLUE LAKE (WANNACUT)

SHEET 8 OF 12 DATE: 07/23/2020

ENG. PROJECT NO. ON:A325:2019-1

DRAWN BY: S. ASHLER

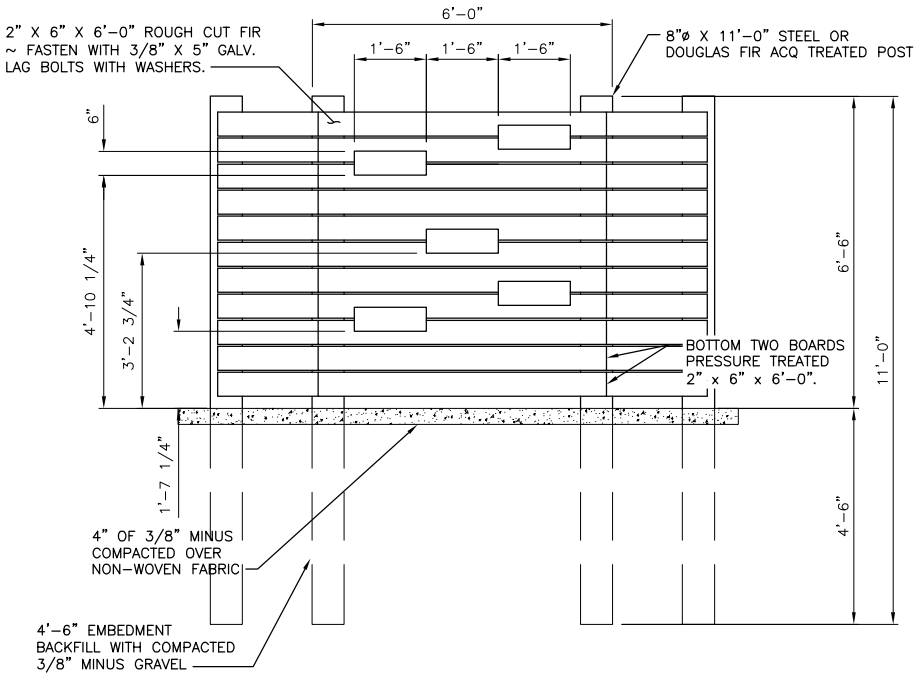

TYPICAL ELEVATION

VIEW BLIND

SCALE: 1/2" = 1'-0"

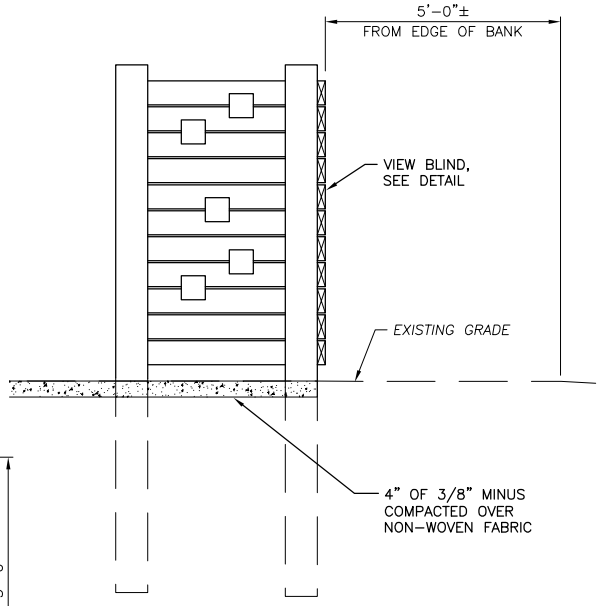

SECTION A 9 9

NOT TO SCALE

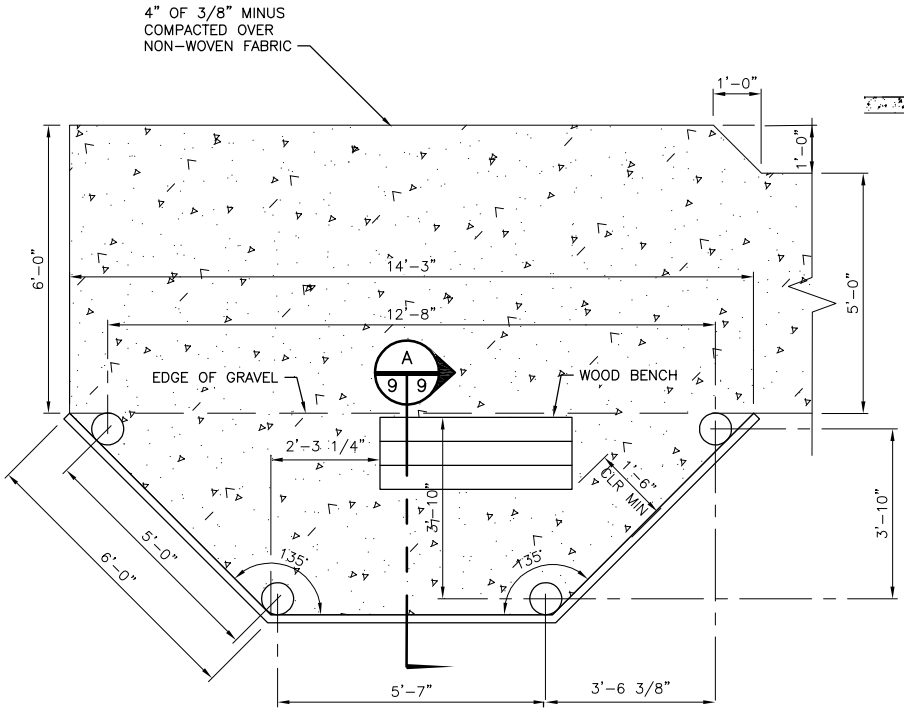

PLAN

REFERENCE NUMBER:

APPLICANT NAME:

WASHINGTON DEPT. of FISH & WILDLIFE

PROPOSED PROJECT:

ACCESS REDEVELOPMENT

LOCATION: BLUE LAKE (WANNACUT)

SHEET 9 OF 12 DATE: 07/23/2020

ENG. PROJECT NO. ON:A325:2019-1

DRAWN BY: S. ASHLER

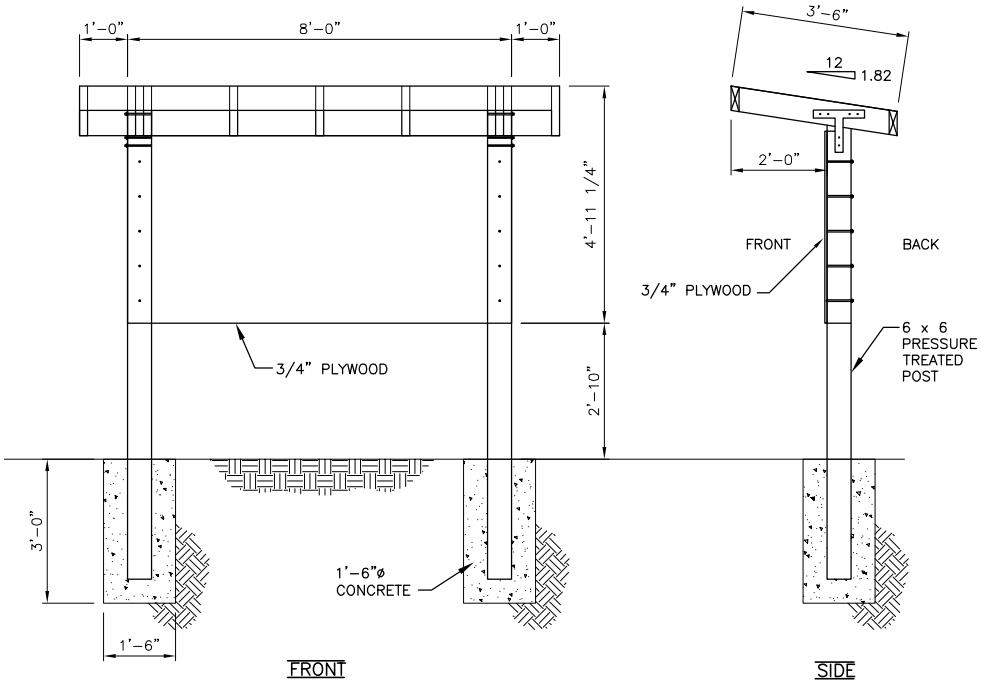

INFORMATION KIOSK #BBK-2

NOT TO SCALE

NOTE:

1. POST TO BE PLUMB AND LEVEL ALL DIRECTIONS
2. ASSEMBLY OF POSTS, PLYWOOD, ROOF AND INSTALLATION BY CONTRACTOR.
3. KIOSK PACKAGE BBK-2 TO BE PROVIDED BY OTHERS

REFERENCE NUMBER:

APPLICANT NAME:

WASHINGTON DEPT. of FISH & WILDLIFE

PROPOSED PROJECT:

ACCESS REDEVELOPMENT

LOCATION: BLUE LAKE (WANNACUT)

SHEET 10 OF 12 DATE: 07/23/2020

ENG. PROJECT NO. ON:A325:2019-1

DRAWN BY: S. ASHLER

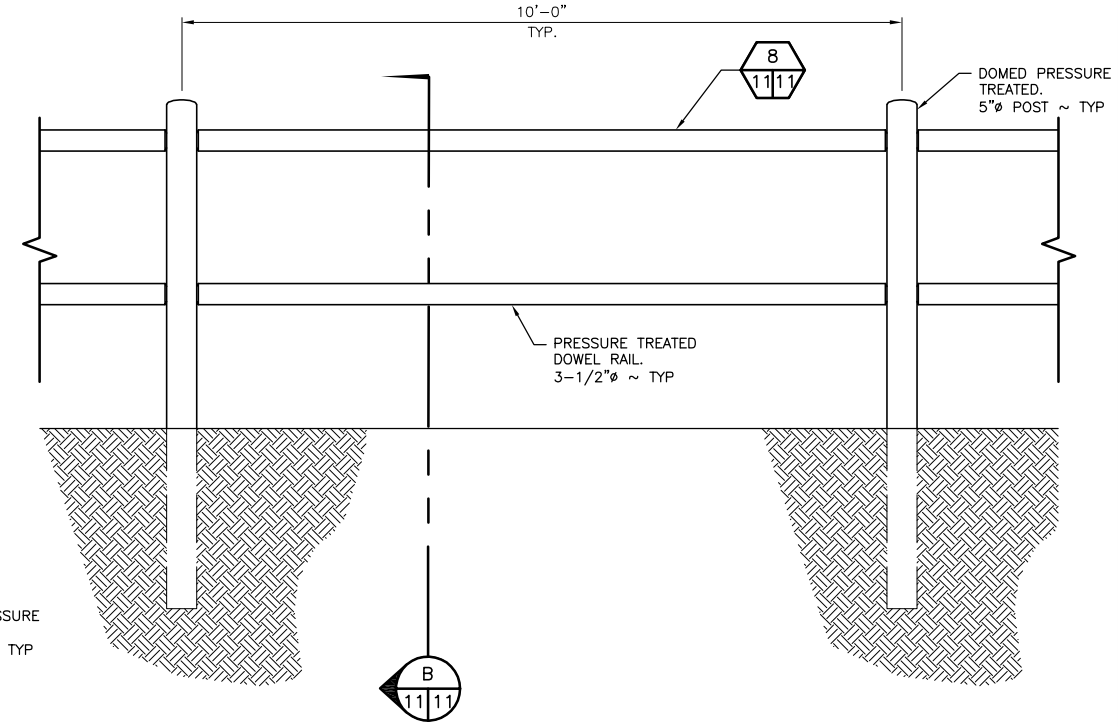

DOWEL RAIL FENCE DETAIL

SCALE: 3/8" = 1'-0"

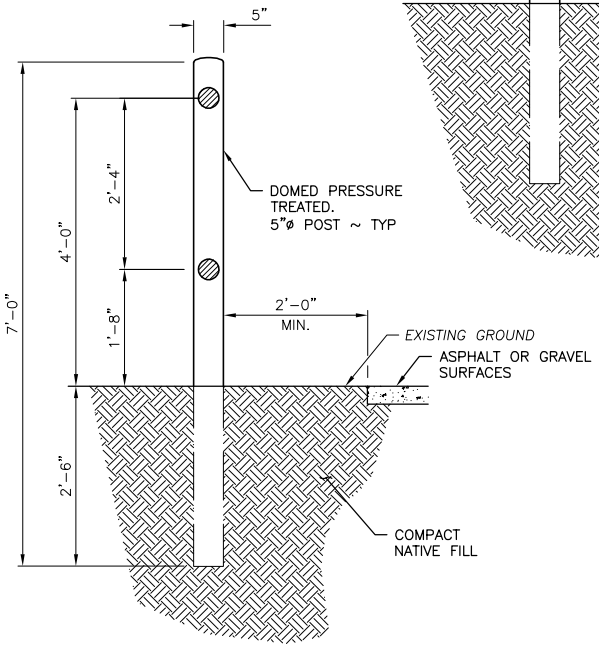

SECTION

SCALE 3/8" = 1'-0"

B
11 11

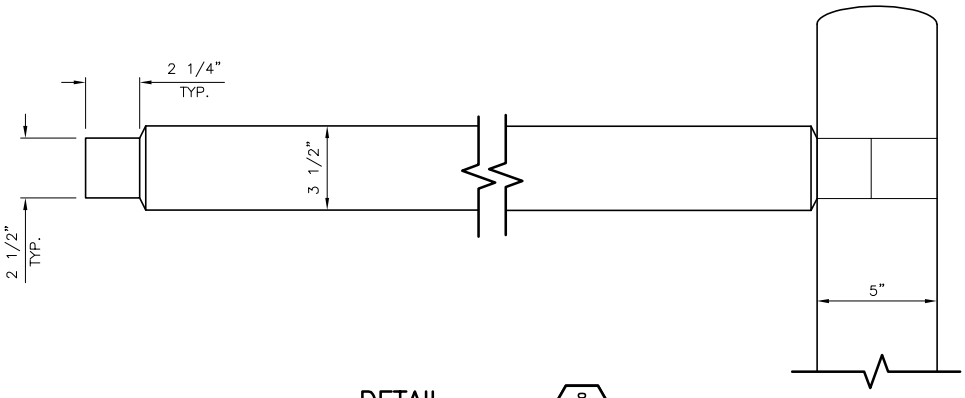

DETAIL

SCALE: 1 1/2" = 1'-0"

8
11 11

NOTE:

1. ALL POSTS & RAILS SHALL BE PRESSURE TREATED (CCA TYPE2 PRESERVATIVE AT 0.4 LB/CU FT RETENTION MIN.)
2. USE 20d GALVANIZED NAILS MIN. AT BRACING.
3. INSTALLATION TO BE COMPLETED IN ACCORDANCE WITH MANUFACTURER'S SPECIFICATIONS.
4. FOR ACCEPTABLE PRODUCT MANUFACTURER'S INFORMATION:
   VISIT: WWW.JASPER-INC.COM
   PHONE NUMBER: 1-800-238-6540
   OR FENCE SUPPLIER:
   DELS FEED AND FARM SUPPLY
   VISIT: WWW.DELSFARMSUPPLY.COM
   PHONE NUMBER: 1-800-300-DELS

REFERENCE NUMBER:
APPLICANT NAME:
WASHINGTON DEPT. of FISH & WILDLIFE
PROPOSED PROJECT:
ACCESS REDEVELOPMENT
LOCATION: BLUE LAKE (WANNACUT)
SHEET 11 OF 12 DATE: 07/23/2020

ENG. PROJECT NO. ON:A325:2019-1

DRAWN BY: S. ASHLER

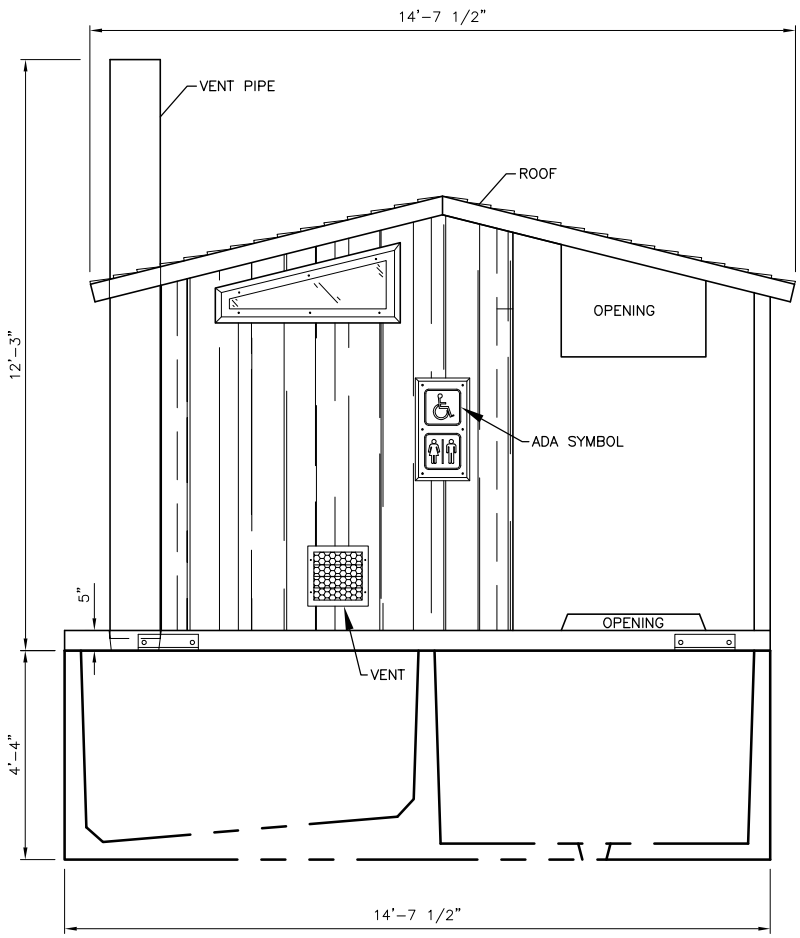

FRONT ELEVATION
NOT TO SCALE

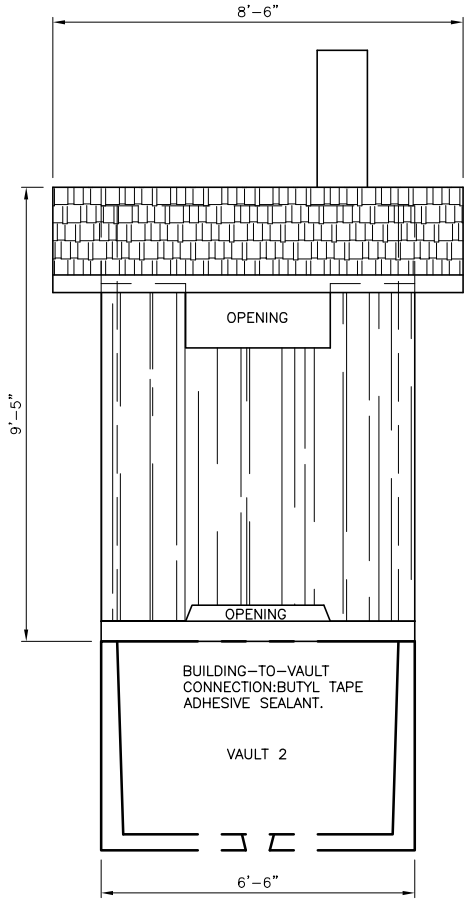

SIDE ELEVATION
NOT TO SCALE

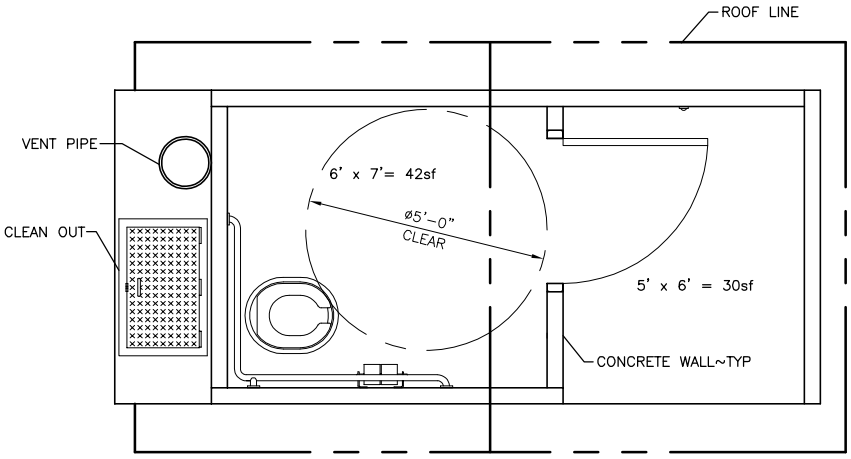

BUILDING TOTAL = 72sf

CXT VAULT TOILET PLAN
NOT TO SCALE

9
5 12

REFERENCE NUMBER:
APPLICANT NAME:
WASHINGTON DEPT. of FISH & WILDLIFE
PROPOSED PROJECT:
ACCESS REDEVELOPMENT
LOCATION: BLUE LAKE (WANNACUT)
SHEET 12 OF 12 DATE: 07/23/2020

ENG. PROJECT NO. ON:A325:2019-1

DRAWN BY: S. ASHLER