US-WA-343-01

JOHNS RIVER W.A. WATER CONTROL STRUCTURE REPAIR

LOCATION MAP

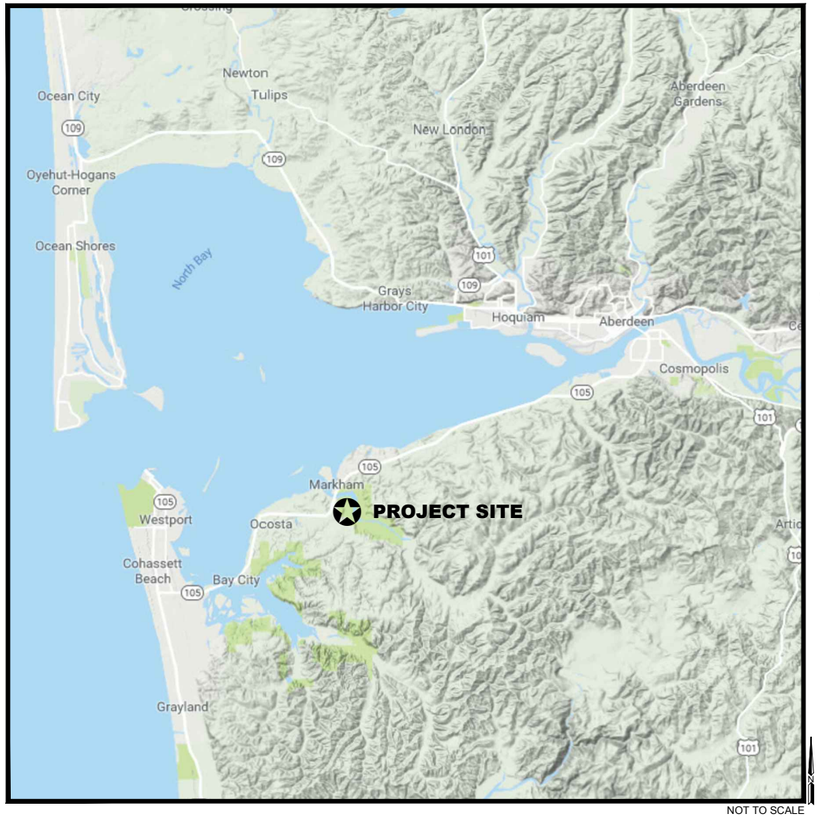

NOT TO SCALE

VICINITY MAP

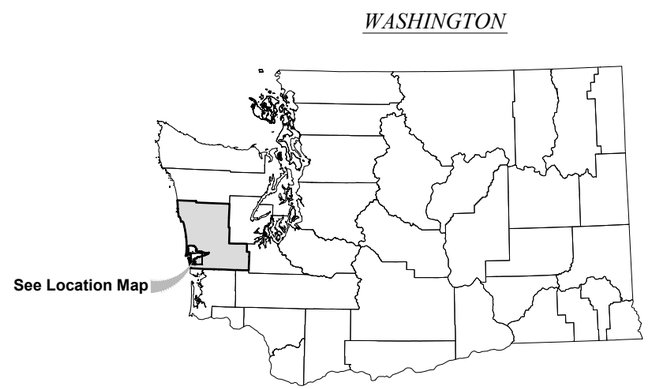

PROJECT LOCATION

Section: 1
Township: T 16 N
Range: R 11 W
Meridian: Willamette
County: Grays Harbor
State: Washington

SURVEY DATUM

Horizontal: NAD 83
US State Plane Washington South Zone
Vertical: NAVD88
Units: US Feet

MAP DATA

Contour Interval:

Aerial Photo: Google

SHEET INDEX

1	Cover Sheet
2	Definitions & Legend
3	Sheet Index
4	Site Plan
5	Detail Sheet
6	Detail Sheet

EMERGENCY CONTACT INFORMATION

In case of fire: CALL 911

PROJECT DIRECTORY

Ducks Unlimited, Inc.
Western Regional Office
3074 Gold Canal Drive
Rancho Cordova, Ca. 95670-6116
Ph. (916) 852-2000

PRELIMINARY

Unauthorized Changes & Uses
The engineer preparing these plans will not be responsible for, or liable for, unauthorized changes to or uses of these plans. All changes must be in writing and must be approved by the preparer of these plans.

Utility Notification Center
CALL BEFORE YOU DIG

PRELIMINARY
NOT FOR CONSTRUCTION

REVISIONS			
REV. NO.	DESCRIPTION	DATE	APPROVED
5			
4			
3			
2			
1			

PROJECT NO. US-WA-343-01 DATE: 4/15/2019
JOHNS RIVER W.A.
WATER CONTROL
STRUCTURE REPAIR
APPROVED BY:

DESIGNED BY: SWL
DRAWN BY: JTS
SURVEYED BY: DU
CHECKED BY: SWL
SHEET NO. 1 of 6

GENERAL NOTES:

1. Ducks Unlimited makes no representations as to the existence or nonexistence of utilities. It is the responsibility of the contractor to comply with the provisions of all applicable utility notification regulations. The contractor will be liable for any damage to utilities caused by construction activities.

2. The engineer does not represent that the location of utilities shown on the plans are exact or complete. It shall be the responsibility of the contractor to determine the presence of, actual locations of and make provisions for all watercourses and utilities. The contractor shall verify location, depth and height. Their verification shall be coordinated by the contractor with the appropriate utility company.

3. The contractor shall exercise extreme caution when working in the vicinity of overhead power lines. Verify location in the field and protect in place.

4. At least 2 working days prior to beginning any digging or excavation work, the contractor shall notify underground service alert (a.k.a. USA North) at www.usanorth.org or by phone at 811 or 1-800-227-2600, to determine locations of existing utilities.

5. In accordance with generally accepted construction practices, the contractor will be solely and completely responsible for the conditions of the job site including safety of all persons and property during performance of the work. The contractor shall ensure that all work is performed in accordance with occupational safety laws, including the design and construction of proper shoring of trenches. The duties of the project engineer do not include review of the adequacy of the contractor's safety in, on, or near the job site.

6. It is the responsibility of the contractor to be knowledgeable about the project specifications and permits. All work shall be completed in compliance with the contract documents. The contractor shall have copies of the most current approved plans, specifications and permit conditions on site during all work operations.

7. The project site and adjacent areas contain sensitive habitat areas for protected wildlife, and may include endangered species. The contractor shall protect wildlife and water quality, and minimize possible air, waterway, and subsoil contamination or pollution or other undesirable effects.

8. Should it appear that the work to be done, or any matter relative thereto, is not sufficiently detailed or explained on these plans or in the specifications, the contractor shall contact the construction manager for such further explanations as may be necessary.

9. Should the contractor find any discrepancies between the conditions existing in the field and the information shown on the drawings, he shall notify the construction manager before proceeding with construction.

Unauthorized Changes & Uses

The engineer preparing these plans will not be responsible for, or liable for, unauthorized changes to or uses of these plans. All changes must be in writing and must be approved by the preparer of these plans.

SURVEY POINT DESCRIPTORS

CTBM	Bench Mark (permanent)	RDSH	Road Shoulder
CTBT	Bench Mark (temporary)	RDSN	Road Sign
CTCP	Survey Control Point (permanent)	RDTO	Road, Toe of Slope
CTCT	Survey Control Point (temporary)	RDTP	Road, Top of Slope
DIFL	Ditch Flowline	SDMH	Storm Drain, Manhole
DIGB	Ditch Grade Break	SDPI	Storm Drain, Pipe Invert
DITO	Ditch Toe	SDPT	Storm Drain, Pipe Top
DITP	Ditch Top	SSMH	Sanitary Sewer, Manhole
ELBX	Electric, Box or Pullbox	SWFL	Swale Flowline
ELGY	Electric, Guy Wire	SWGB	Swale Grade Break
ELPP	Electric, Power Pole	SWTO	Swale Toe
ELSN	Electric, Warning Sign	SWTP	Swale Top
ELTR	Electric, Transformer	TFBL	Topo Feature, Building
ELTW	Electric, Tower	TFBR	Topo Feature, Brush
ELVT	Electric, Vault	TFCO	Topo Feature, Concrete (pad, slab, etc.)
FNAP	Fence Angle Point	TFFL	Topo Feature, Flowline
FNCR	Fence Corner	TFGB	Topo Feature, Grade Break
FNGT	Fence Gate	TFGS	Topo Feature, Ground Shot
FNLN	Fence Line	TFRK	Topo Feature, Rock Or Rocky Area Boundary
IRCO	Irrigation Concrete Pad	TFTL	Topo Feature, Tree line
IRCP	Irrigation Control Panel	TFTO	Topo Feature, Grade Break at Toe
IRPI	Irrigation Pipe Invert	TFTP	Topo Feature, Grade Break at Top
IRPM	Irrigation Pump	TFTR	Topo Feature, Tree
IRPT	Irrigation Pipe Top	WAEW	Edge of Water
IRVL	Irrigation Valve	WAHW	High Water Mark
IRWL	Irrigation Well	WAUW	Under Water Ground Shot
LVCL	Levee Centerline	WAWS	Water Surface
LVGB	Levee Grade Break	WCFL	Water Control Structure, Flowline/Invert at Structure
LVTO	Levee Toe of Slope	WCFR	Water Control Structure, Frame Top
LVTP	Levee Top of Slope	WCHW	Water Control Structure, Headwall
RDCL	Road, Centerline	WCPI	Water Control Structure, Pipe Invert at Outlet
RDED	Road, Edge of Dirt Road	WCPT	Water Control Structure, Pipe Top at Outlet
RDEG	Road, Edge of Gravel Road	WCST	Water Control Structure, Top of Structure
RDEP	Road, Edge of Paved Road	WCWW	Water Control Structure, Wing Wall
RDGB	Road Grade Break		

ABBREVIATIONS

AB	Aggregate Base	MIN	Minimum	WS	Water Surface
AC	Acre	MISC	Miscellaneous	WSEL	Water Surface Elevation
APPROX	Approximate	(N)	New	WWF	Welded Wire Fabric
BM	Benchmark	N	North	X:1	Slope, Horizontal:Vertical
CAP	Corrugated Aluminum Pipe	NIC	Not In Contract		
CC	Center to Center	NTS	Not To Scale		
CF	Cubic Foot	OC	On Center		
CFS	Cubic Foot Per Second	OD	Outside Diameter		
CL, ℄	Centerline	PIP	Pressure Irrigation Pipe		
CMP	Corrugated Metal Pipe	PP	Power Pole		
CMPA	Corrugated Metal Arch Pipe	PSI	Pounds per Square Inch		
CONC	Concrete	PT	Pressure Treated		
CP	Control Point	PVC	Polyvinyl Chloride		
CY	Cubic Yard	QTY	Quantity		
DEMO	Demolish	R	Right		
DIA, Ø	Diameter	RCB	Reinforced Concrete Box		
Dp	Pipe Diameter	RD	Road		
Dr	Riser Diameter	REF	Reference Dimension		
DU	Ducks Unlimited, Inc.	REQD	Required		
D/S	Downstream	ROW	Right Of Way		
E	East	S	South		
EG	Existing Ground	SCH	Schedule		
EL	Elevation	SS	Stainless Steel		
EX, EXIST	Existing	SDR	Standard Dimension Ratio		
FG	Finished Grade	SF	Square Feet		
FL	Flowline	SHT	Sheet		
FRG	Final Rough Grade	SP	Special		
FT	Foot, Feet	SPECS	Specifications		
FTG	Fitting, Footing	SY	Square Yard		
GA	Gauge	STA	Station		
GB	Grade Break	STD	Standard		
H	Height	TBD	To Be Determined by Engineer		
HDPE	High-Density Polyethylene	TBM	Temporary Benchmark		
HR	Half Round	TE	Top Elevation		
ID	Inside Diameter	TEMP	Temporary		
IE	Invert Elevation	TOI	Top of Island		
IG	Initial Grade	TOL	Top of Levee		
IN	Inch, Inches	TOB	Top of Berm		
INV	Invert	TYP	Typical		
IPS	Iron Pipe Size	USA	Underground Service Alert		
L	Length, Left	U/S	Upstream		
LBF	Pounds-Force	VLV	Valve		
LF	Linear Feet	W	Width, West (where applicable)		
MAINT	Maintenance	W /	With		
MAX	Maximum	WCS	Water Control Structure		

LEGEND & STANDARD SYMBOLS

(Symbols do not represent actual scale / size of object)

EXISTING CONDITIONS

- Existing Fence Line - Barbed Wire
- Existing Fence Line - Chain Link
- Existing Fence Line - Stockade
- Power / Telephone Overhead Lines (OH)
- Underground Gas Line (G)
- Electric Line (E)
- Force Main Line (FM)
- Sanitary Sewer Line (SS)
- Storm Drain Line (SD)
- Existing Ditch (TOP, TOE, FL, TOE, TOP)
- Existing Levee (TOE, TOP, CL, TOP, TOE)
- Existing Swale (TOP, TOE, FL, TOE, TOP)
- Existing Road - Dirt (EDGE, CL, EDGE)
- Existing Road - Gravel (EDGE, CL, EDGE)
- Existing Road - Paved (SHOULDER, EDGE, CL, EDGE, SHOULDER)
- Existing Trees / Brushline
- Existing Power / Telephone Pole
- Existing Electric Guy Wire
- Existing Electric Transformer
- Existing Electric Tower
- Existing Electric Vault
- Existing Blind
- Existing Gate Valve
- Existing Air Relief Valve
- Existing Alfalfa / Overflow Valve
- Existing Irrigation Well
- Existing Irrigation Pump
- Existing Water Meter
- Existing Fire Hydrant
- Existing Manhole
- Existing Natural Gas Meter / Valve
- Existing Sign
- Existing Pipe / Culvert
- Existing Water Control Structure (Precast Concrete)
- Existing Water Control Structure (Full Round)
- Existing Water Control Structure (Half Round)

DESIGN SYMBOLS

- WCS01 — Water Control Structure ID#
- 1 — Revision Number Identifier
- Cut/Borrow Area / Pothole
- Fill Area
- Ditch Cleaning
- New Ditch Centerline / Flowline
- New Swale Centerline / Flowline
- Regrade Existing Swale
- New Levee Centerline
- Improved Levee Centerline
- Regraded/Lowered Levee Centerline
- Remove Existing Levee
- DESIGN WSEL=XXX.X — Design Water Surface Elevation
- New Power Pole
- New Gate Valve
- New Air Relief Valve
- New Alfalfa / Overflow Valve
- New Irrigation Pump
- New Water Control Structure
- New Water Control Structure
- Benchmark
- Temporary Benchmark
- Control Point

Grading Example

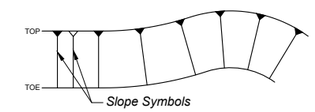

DETAILING CONVENTIONS

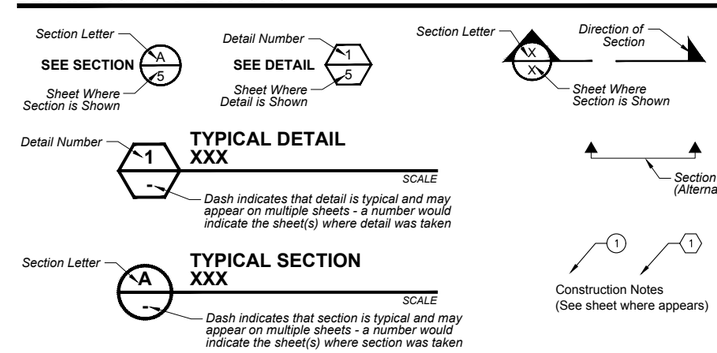

PRELIMINARY

REVISIONS			
REV. NO.	DESCRIPTION	DATE	APPROVED
5			
4			
3			
2			
1			

DUCKS UNLIMITED

PROJECT NO. US-WA-343-01 DATE: 4/15/2019

JOHNS RIVER W.A.
WATER CONTROL
STRUCTURE REPAIR

DEFINITIONS & LEGEND

DESIGNED BY:	SWL
DRAWN BY:	JTS
SURVEYED BY:	DU
CHECKED BY:	SWL
SHEET NO.	2 of 6

Figure 1. Project Vicinity
John's River Wildlife Area - WCS Replacment Project

Location: Grays Harbor County, WA
Lat/Long: 46.896047 / -123.993324
Section / Township / Range: 1 / 16N / 11W
Prepared by: Ducks Unlimited, Inc.
Date Prepared: June 14, 2018

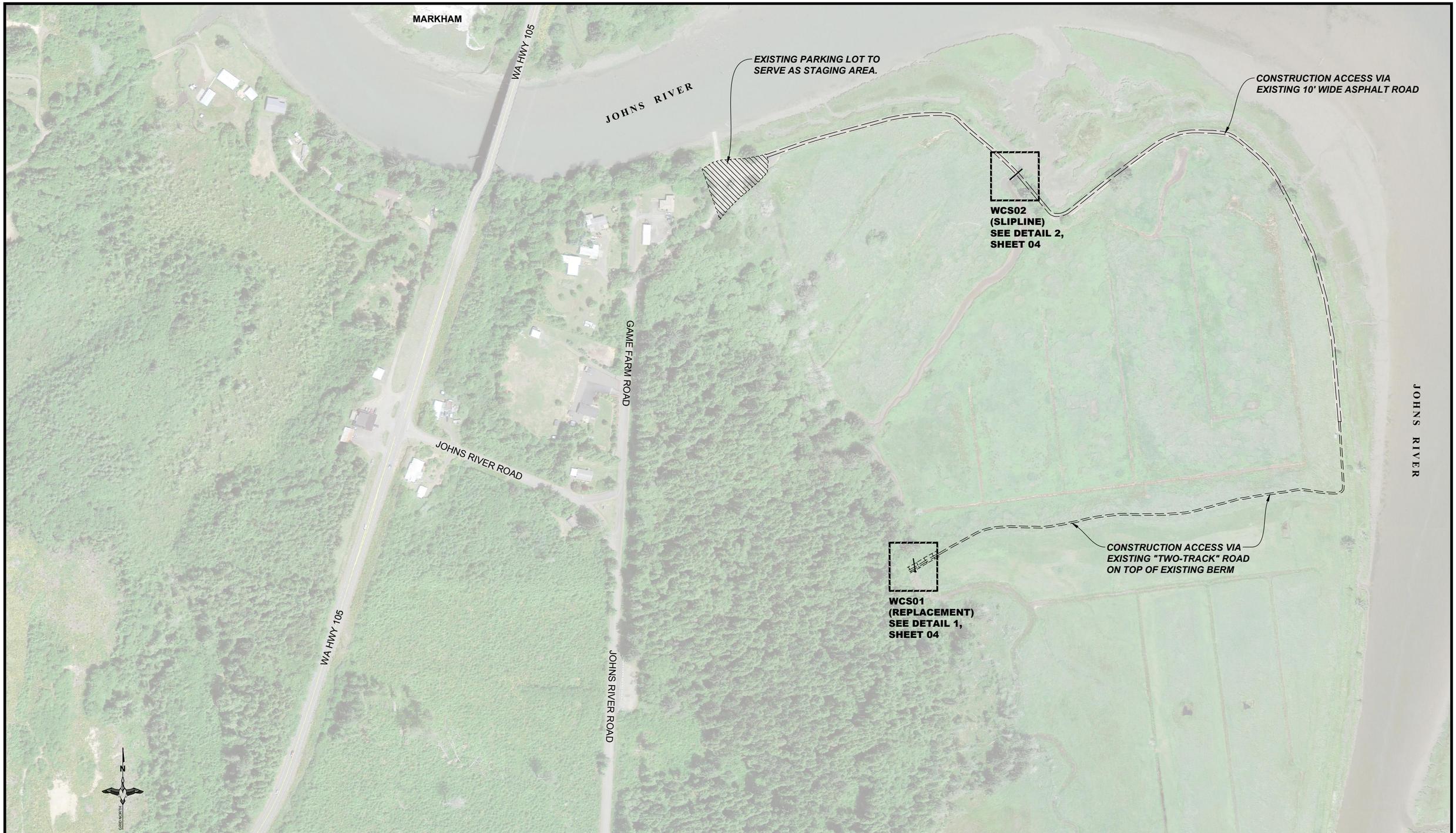

0 150 300 FEET
HORIZONTAL SCALE

Unauthorized Changes & Uses
The engineer preparing these plans will not be responsible for, or liable for, unauthorized changes to or uses of these plans. All changes must be in writing and must be approved by the preparer of these plans.

PRELIMINARY

REVISIONS			
REV. NO.	DESCRIPTION	DATE	APPROVED
5			
4			
3			
2			
1			

DUCKS UNLIMITED

PROJECT NO. US-WA-343-01 DATE: 4/15/2019

JOHNS RIVER W.A.
WATER CONTROL
STRUCTURE REPAIR

SHEET INDEX

DESIGNED BY:	SWL
DRAWN BY:	JTS
SURVEYED BY:	DU
CHECKED BY:	SWL
SHEET NO.	3 of 6

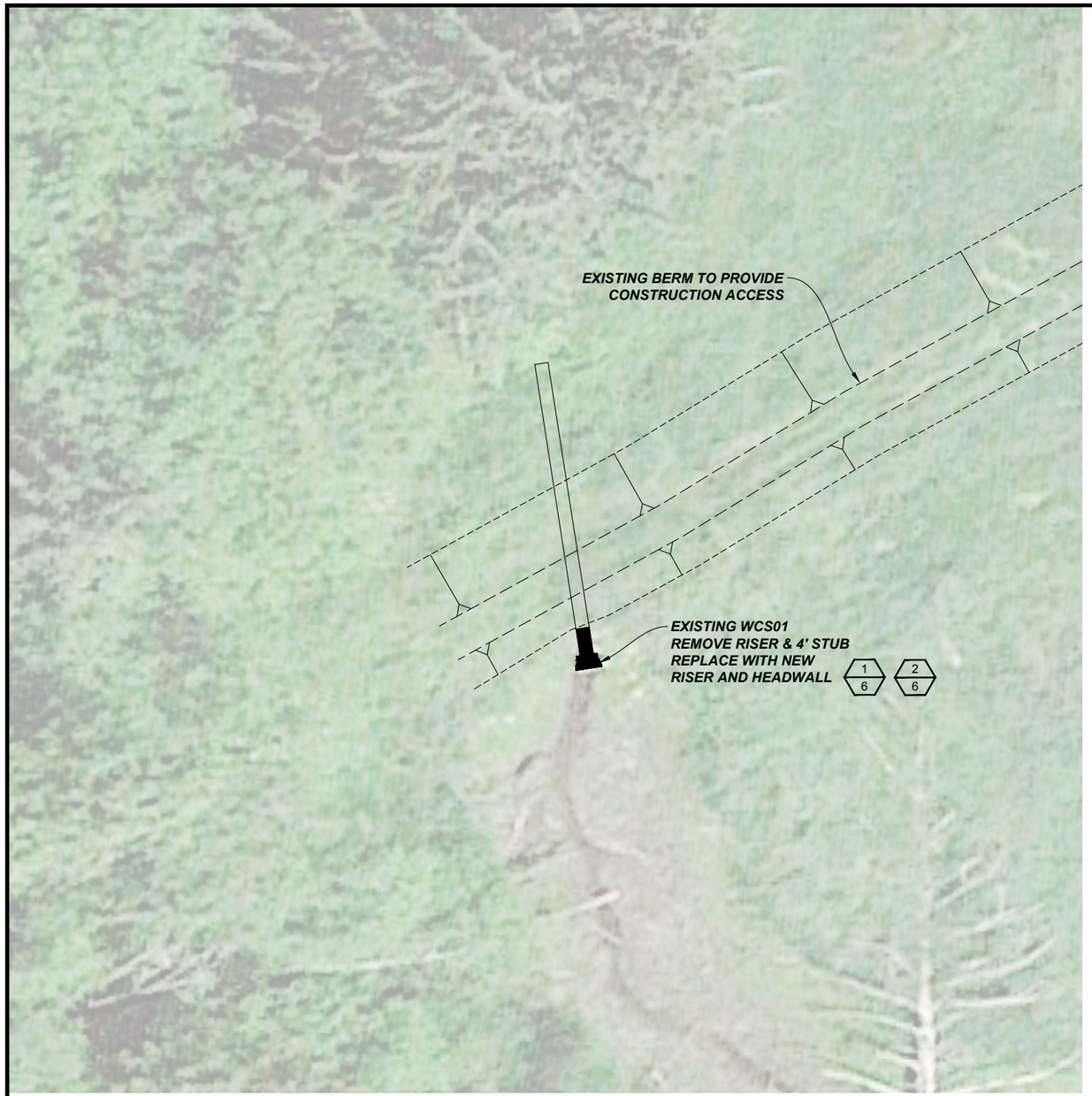

1 - DETAIL WCS01 REPLACEMENT

2 - DETAIL WCS02 SLIPLINE

N
GRID NORTH

0 10 20 FEET
HORIZONTAL SCALE

Unauthorized Changes & Uses
The engineer preparing these plans will not be responsible for, or liable for, unauthorized changes to or uses of these plans. All changes must be in writing and must be approved by the preparer of these plans.

PRELIMINARY

REVISIONS			
REV. NO.	DESCRIPTION	DATE	APPROVED
5			
4			
3			
2			
1			

DUCKS UNLIMITED

PROJECT NO. US-WA-343-01 DATE: 4/15/2019

JOHNS RIVER W.A.
WATER CONTROL
STRUCTURE REPAIR

SITE PLAN

DESIGNED BY: SWL
DRAWN BY: JTS
SURVEYED BY: DU
CHECKED BY: SWL
SHEET NO. 4 of 6

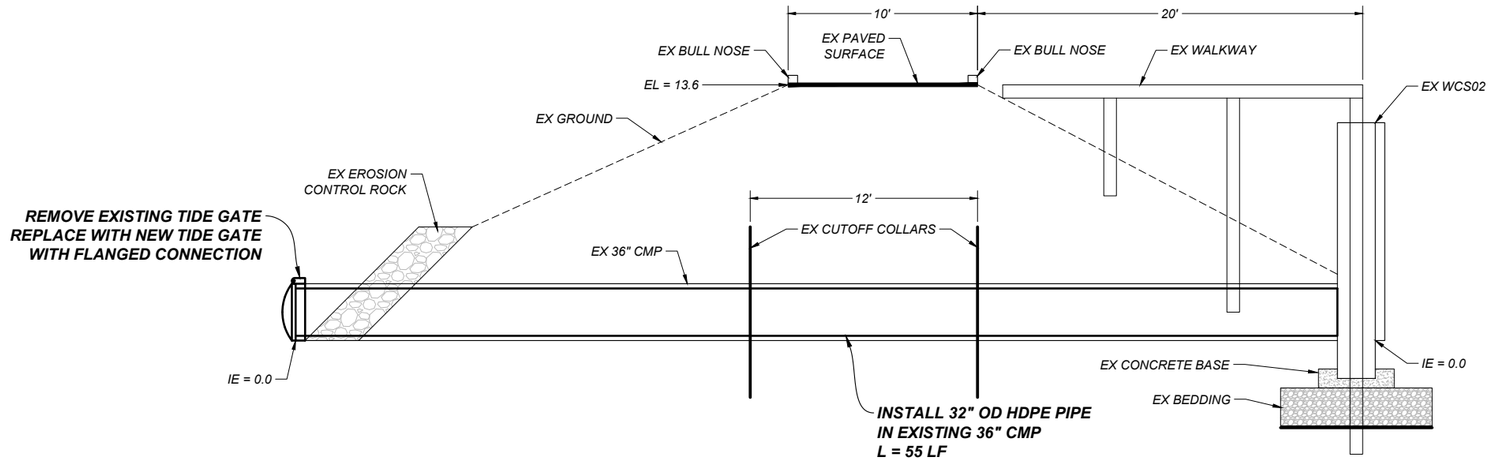

A / - TYPICAL SECTION
WCS02 (SLIPLINE)

NOT TO SCALE

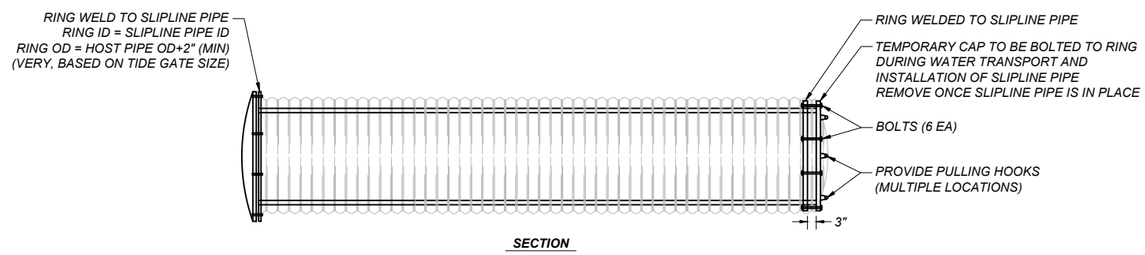

1 / - TYPICAL DETAIL
SLIPLINE PIPE

NOT TO SCALE

PRELIMINARY

Unauthorized Changes & Uses
The engineer preparing these plans will not be responsible for, or liable for, unauthorized changes to or uses of these plans. All changes must be in writing and must be approved by the preparer of these plans.

REVISIONS			
REV. NO.	DESCRIPTION	DATE	APPROVED
5			
4			
3			
2			
1			

DUCKS UNLIMITED

PROJECT NO. US-WA-343-01 DATE: 4/15/2019

JOHNS RIVER W.A.
WATER CONTROL
STRUCTURE REPAIR

DETAILS

DESIGNED BY: SWL
DRAWN BY: JTS
SURVEYED BY: DU
CHECKED BY: SWL
SHEET NO. 5 of 6

NOTES:

1. ALL WELDS SHALL BE WATERTIGHT
2. KEEP CHANNELS FREE OF CONCRETE
3. ALL MATERIAL SHALL BE ALUMINUM
4. THE CENTER SUPPORT SHALL BE OMITTED WHEN H < 2.5 Dp OR AS DIRECTED BY THE SPECIFICATIONS.
5. CONTRACTOR SHALL SUPPLY A COMPLETE SET OF BOARDS FOR EACH STRUCTURE.
6. CONTRACTOR SHALL SUPPLY BAND AND GASKET FOR 24" DIAMETER CULVERT.

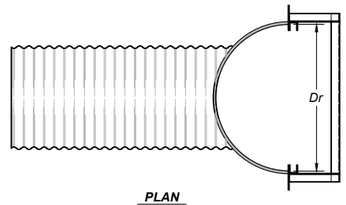

PLAN

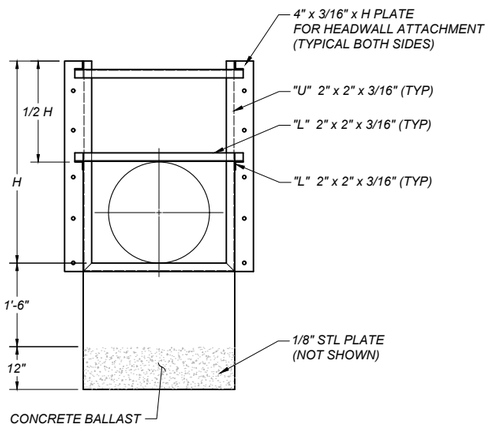

ELEVATION

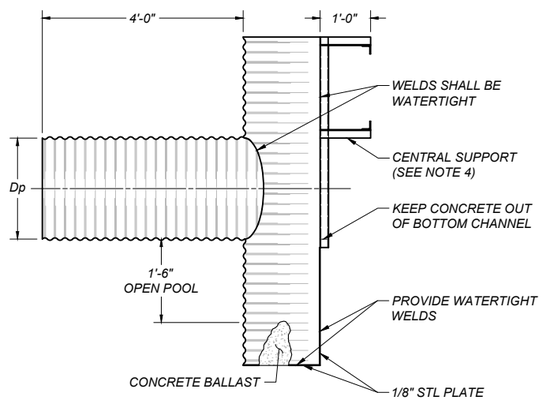

SECTION

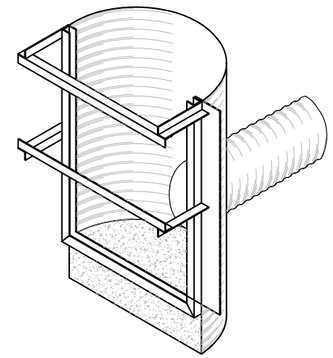

ISOMETRIC

1 - TYPICAL DETAIL CMP HALF ROUND RISER

NOT TO SCALE

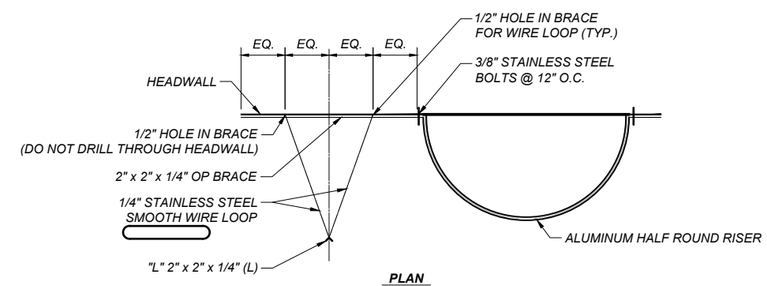

PLAN

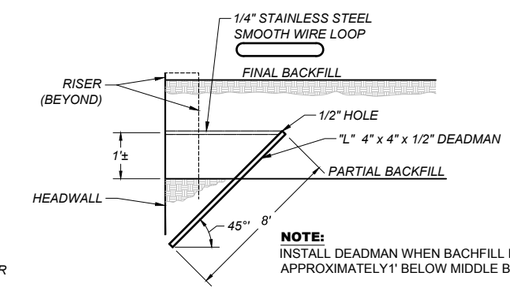

NOTE:
INSTALL DEADMAN WHEN BACHFILL IS APPROXIMATELY1' BELOW MIDDLE BRACE

SECTION

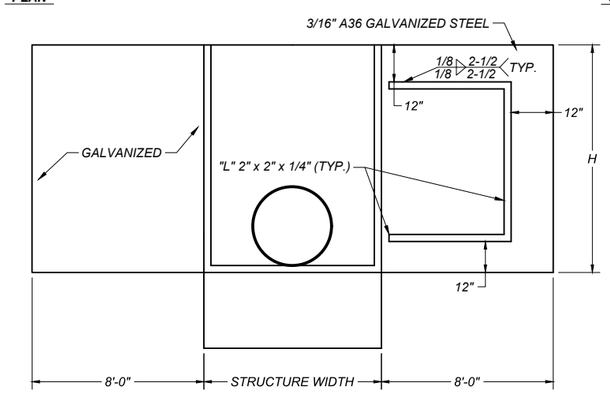

NOTE:
INSTALL DEADMAN AT EACH HEADWALL (SEE DETAILS)

ELEVATION

2 - TYPICAL DETAIL SHEET STEEL HEADWALL

NOT TO SCALE

PRELIMINARY

REVISIONS			
REV. NO.	DESCRIPTION	DATE	APPROVED
5			
4			
3			
2			
1			

DUCKS UNLIMITED

PROJECT NO. US-WA-343-01 DATE: 4/15/2019

JOHNS RIVER W.A.
WATER CONTROL
STRUCTURE REPAIR

DETAILS

DESIGNED BY:	SWL
DRAWN BY:	JTS
SURVEYED BY:	DU
CHECKED BY:	SWL
SHEET NO.	6 of 6

Unauthorized Changes & Uses
The engineer preparing these plans will not be responsible for, or liable for, unauthorized changes to or uses of these plans. All changes must be in writing and must be approved by the preparer of these plans.